L'ARTE LL LUCE®

Catalog

Square

DM-SE1a[A1-A2]

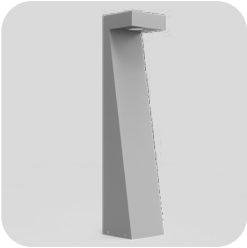
DM-SE2a[A3-A4]

DM-SE3a[A5-A6]

DM-SE4a[A7-A8]

DM-SE5a[A9-A10]

DM-SE6a[A11-A12]

DM-SE7a[A13-A14]

DM-SE8a[A15-A16]

DM-SE9a[A17-A18]

DM-SE10a[A19-A20]

DM-SE11a-B[A21-A22]

DM-SE12a[A23-A24]

DM-SE13a[A25-A26]

DM-SE14a[A27-A28]

DM-SE15a[A29-A30]

DM-SE16a[A31-A32]

DM-SE17a[A33-A34]

DM-SE18a[A35-A36]

DM-SE19a[A37-A38]

DM-SE20a[A39-A40]

Catalog

Square

DM-SE21a[A41-A42]

DM-SE22a[A43-A44]

DM-SE23a[A45-A46]

DM-SE24a[A47-A48]

DM-SE25a[A49-A50]

DM-SE26a[A51-A52]

DM-SE27a-b[A53-A56]

DM-SE28a[A57-A58]

DM-SE29a[A59-A60]

DM-SE30a[A61-A62]

DM-SE31a[A63-A64]

DM-SE32a[A65-A66]

DM-SE33a[A67-A68]

DM-SE34a[A69-A70]

DM-SE35a[A71-A72]

DM-SE36a[A73-A74]

DM-SE37a[A75-A76]

DM-SE38a[A77-A78]

DM-SE39a[A79-A80]

DM-SE40a[A81-A82]

Catalog

Square

DM-SE41a[A83-A84]

DM-SE42a[A85-A86]

DM-SE43a[A87-A88]

DM-SE44a[A89-A90]

DM-SE45a[A91-A92]

DM-SE46a[A93-A94]

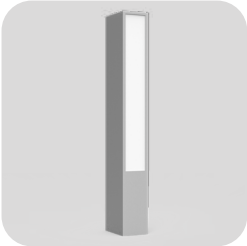
DM-SE47a[A95-A96]

DM-SE48a[A97-A98]

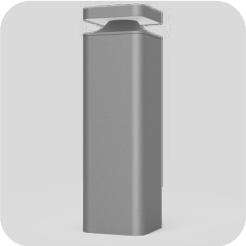
DM-SE49a[A99-A100]

DM-SE50a[A101-A102]

DM-SE51a-b[A103-A106]

DM-SE52a[A107-A108]

DM-SE53a-b[A109-A112]

DM-SE54a-b[A113-A116]

DM-SE55a[A117-A118]

DM-SE56a[A119-A120]

DM-SE57a[A121-A122]

DM-SE58a[A123-A124]

DM-SE59a[A125-A126]

DM-SE60a[A127-A128]

Catalog

Square

DM-SE61a[A129-A130]

DM-SE62a[A131-A132]

DM-SE63a[A133-A134]

DM-SE64a[A135-A136]

DM-SE65a[A137-A138]

DM-SE66a[A139-A140]

DM-SE67a[A141-A142]

DM-SE68a[A143-A144]

DM-SE69a[A145-A146]

DM-SE70a[A147-A148]

DM-SE71a-b[A149-A152]

DM-SE72a-b[A153-A156]

DM-SE73a[A157-A158]

DM-SE74a[A159-A160]

DM-SE75a[A161-A162]

DM-SE76a[A163-A164]

DM-SE77a[A165-A166]

DM-SE78a[A167-A168]

DM-SE79a[A169-A170]

DM-SE80a[A171-A172]

Catalog

Square

DM-SE81a[A173-A174]

DM-SE82a[A175-A176]

DM-SE83a[A177-A178]

DM-SE84a[A179-A180]

DM-SE85a[A181-A182]

DM-SE86a[A183-A184]

Catalog

Cylinder

DM-CR1a[B1-B2]

DM-CR2a[B3-B4]

DM-CR3a[B5-B6]

DM-CR4a[B7-B8]

DM-CR5a[B9-B10]

DM-CR6a[B11-B12]

DM-CR7a[B13-B14]

DM-CR8a[B15-B16]

DM-CR9a[B17-B18]

DM-CR10a[B19-20]

DM-CR11a[B21-B22]

DM-CR12a[B23-B24]

DM-CR13a[B25-B26]

DM-CR14a-b[B27-B30]

DM-CR15a[B31-B32]

DM-CR16a[B33-B34]

DM-CR17a[B35-B36]

DM-CR18a[B37-B38]

DM-CR19a[B39-B40]

DM-CR20a[B41-B42]

Catalog

Cylinder

DM-CR21a[B43-B44]

DM-CR22a[B45-B46]

DM-CR23a[B47-B48]

DM-CR24a[B49-B50]

DM-CR25a[B51-B52]

DM-CR26a[B53-B54]

DM-CR27a[B55-B56]

DM-CR28a[B57-B58]

DM-CR29a[B59-B60]

DM-CR30a[B61-B62]

DM-CR31a[B63-B64]

DM-CR32a[B65-B66]

DM-CR33a[B67-B68]

DM-CR34a[B69-B70]

DM-CR35a[B71-B72]

DM-CR36a[B73-B74]

DM-CR37a[B75-B76]

DM-CR38a[B77-B78]

DM-CR39a[B79-B80]

DM-CR40a[B81-82]

Catalog

Cylinder

DM-CR41a[B83-B84]

DM-CR42a[B85-B86]

DM-CR43a[B87-B88]

DM-CR44a[B89-B90]

DM-CR45a[B91-B92]

DM-CR46a[B93-B94]

DM-CR47a[B95-B96]

DM-CR48a[B97-B98]

DM-CR49a[B99-B100]

DM-CR50a[B101-B102]

DM-CR51a-b[B103-B106]

DM-CR52a[B107-B108]

DM-CR53a[B109-B110]

DM-CR54a[B111-B112]

DM-CR55a[B113-B114]

DM-CR56a[B115-B1116]

DM-CR57a[B117-B118]

DM-CR58a[B119-B120]

DM-CR59a[B121-B122]

DM-CR60a[B123-B124]

Catalog

Cylinder

DM-CR61a[B125-B126]

DM-CR62a[B127-B128]

DM-CR63a[B129-B130]

DM-CR64a[B131-B132]

DM-CR65a-b[B133-B136]

DM-CR66a[B137-B138]

DM-CR67a[B139-B140]

DM-CR68a[B141-B142]

DM-CR69a[B143-B144]

DM-CR70a[B145-B146]

DM-CR71a[B147-B148]

DM-CR72a[B149-B150]

DM-CR73a[B151-B152]

DM-CR74a[B153-B154]

DM-CR75a[B155-B156]

DM-CR76a[B157-B158]

DM-CR77a[B159-B160]

DM-CR78a[B161-B162]

DM-CR79a[B163-B164]

DM-CR80a[B165-B166]

Catalog

Cylinder

DM-CR81a[B167-B168]

DM-CR82a[B169-B170]

DM-CR83a[B171-B172]

DM-CR84a[B173-B174]

DM-CR85a[B175-B176]

DM-CR86a[B177-B178]

DM-CR87a[B179-B180]

DM-CR88a[B181-B182]

DM-CR89a[B183-B184]

DM-CR90a[B185-B186]

DM-CR91a[B187-B188]

DM-CR92a[B189-B190]

DM-CR93a[B191-B192]

DM-CR94a[B193-B194]

DM-CR95a[B195-B196]

DM-CR96a[B197-B198]

DM-CR97a[B199-B200]

DM-CR98a[B201-B202]

DM-CR99a[B203-B204]

DM-CR100a[B205-B206]

Catalog

Cylinder

DM-CR101a[B207-B208]

DM-CR102a[B209-B210]

DM-CR103a[B211-B212]

DM-CR104a[B213-B214]

DM-CR105a[B215-B216]

DM-CR106a[B217-B218]

DM-CR107a[B219-B220]

DM-CR108a[B221-B222]

DM-CR109a[B223-B224]

DM-CR110a[B225-B226]

DM-CR111a[B227-B228]

DM-CR112a[B229-B230]

DM-CR113a[B231-B232]

DM-CR114ab[B233-B234]

DM-CR115a[B235-B236]

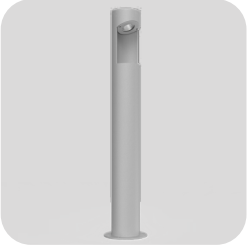
DM-CR116a[B237-B238]

DM-CR117a[B239-B240]

DM-CR118a-c[B241-B244]

DM-CR119a[B245-B246]

DM-CR120a[B247-B248]

Catalog

Cylinder

DM-CR121a[B249-B250]

DM-CR122a[B251-B252]

DM-CR123a[B253-B254]

DM-CR124a[B255-B256]

DM-CR125a[B257-B258]

DM-CR126a[B259-B260]

Catalog

Biomimetic

DM-BC1a[C1-C2]

DM-BC2a[C3-C4]

DM-BC3a-b[C5-C8]

DM-BC4a[C9]

DM-BC5a[C11-C12]

DM-BC6a[C13-C14]

DM-BC7a[C15-C16]

DM-BC8a[C17-C18]

DM-BC9a[C19-C20]

DM-BC10a[C21-C22]

DM-BC11a[C23-C24]

DM-BC12a[C25-C26]

DM-BC13a[C27-C28]

DM-BC14a[C29-C30]

DM-BC15a[C31-C32]

DM-BC16a[C33-C34]

DM-BC17a[C35-C36]

DM-BC18a[C37-C38]

DM-BC19a[C39-C40]

DM-BC20a[C41-C42]

Catalog

Biomimetic

DM-BC21a[C43-C44]

DM-BC22a[C45-C46]

DM-BC23a[C47-C48]

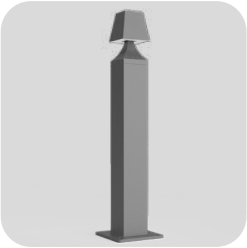
DM-BC24a[C49-C50]

DM-BC25a[C51-C52]

DM-BC26a[C53-C54]

DM-BC27a[C55-C56]

DM-BC28a[C57-C58]

DM-BC29a[C59-C60]

DM-BC30a[C61-C62]

DM-BC31a[C63-C64]

DM-BC32a[C65-C66]

DM-BC33a[C67-C68]

DM-BC34a[C69-C70]

DM-BC35a[C71-C72]

DM-BC36a[C73-C74]

DM-BC37a[C75-C76]

DM-BC38a[C77-C78]

DM-BC39a[C79-C80]

DM-BC40a[C81-C82]

Catalog

Biomimetic

DM-BC41a[C83-C84]

DM-BC42a[C85-C86]

DM-BC43a[C87-C88]

DM-BC44a[C89-C90]

DM-BC45a[C91-C92]

DM-BC46a[C93-C94]

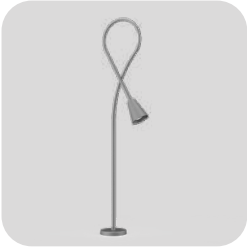
DM-BC47a[C95-C96]

DM-BC48a[C97-C98]

DM-BC49a[C99-C100]

DM-BC50a[C101-C102]

DM-BC51a[C103-C104]

DM-BC52a[C105-C106]

DM-BC53a[C107-C108]

DM-BC54a[C109-C110]

DM-BC55a[C111-C112]

DM-BC56a[C113-C114]

DM-BC57a[C115-C116]

DM-BC58a[C117-C118]

DM-BC59a[C119-C120]

DM-BC60a[C121-C122]

Catalog

Biomimetic

DM-BC61a[C123-C124]

DM-BC62a[C125-C126]

DM-BC63a[C127-C128]

DM-BC64a[C129-C130]

DM-BC65a[C131-C132]

DM-BC66a[C133-C134]

DM-BC67a[C135-C136]

DM-BC68a[C137-C138]

DM-BC69a[C139-C140]

DM-BC70a[C141-C142]

DM-BC71a[C143-C144]

DM-BC72a[C145-C146]

DM-BC73a[C147-C148]

DM-BC74a[C149-C150]

DM-BC75a[C151-C152]

DM-BC76a[C153-C154]

DM-BC77a[C155-C156]

DM-BC78a[C157-C158]

DM-BC79a[C159-C160]

DM-BC80a-b[C161-C164]

Catalog

Biomimetic

DM-BC81a[C165-C166]

DM-BC82a[C167-C168]

DM-BC83a[C169-C170]

DM-BC84a[C171-C172]

DM-BC85a[C173-C174]

DM-BC86a[C175-C176]

DM-BC87a[C177-C178]

DM-BC88a[C179-C180]

DM-BC89a[C181-C182]

DM-BC90a[C183-C184]

DM-BC91a[C185-C186]

DM-BC92a[C187-C188]

DM-BC93a[C189-C190]

DM-BC94a[C191-C192]

DM-BC95a[C193-C94]

DM-BC96a[C195-C196]

DM-BC97a[C197-C198]

DM-BC98a[C199-C200]

DM-BC99a[C201-C202]

DM-BC100a[C203-C204]

Catalog

Biomimetic

DM-BC101a[C205-C206]

DM-BC102a[C207-C208]

DM-BC103a-b[C209-C210]

DM-BC104a[C211-C212]

DM-BC105a[C213-C214]

DM-BC106a[C215-C216]

DM-BC107a[C217-C218]

DM-BC108a[C219-C220]

DM-BC109a[C221-C222]

DM-BC110a[C223-C224]

DM-BC111a[C225-C226]

DM-BC112a[C227-C228]

DM-BC113a[C229-C230]

DM-BC114a[C231-C232]

DM-BC115a[C233-C234]

DM-BC116a[C235-C236]

DM-BC117a[C237-C238]

DM-BC118a[C239-C240]

DM-BC119a[C241-C242]

DM-BC120a[C243-C244]

Catalog

Lower

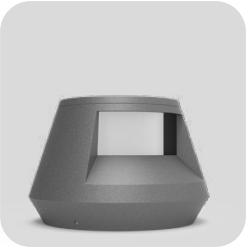
DM-LR1a[D1-D2]

DM-LR2a[D3-D4]

DM-LR3a[D5-D6]

DM-LR4a[D7-D8]

DM-LR5a[D9-D10]

DM-LR6a[D11-D12]

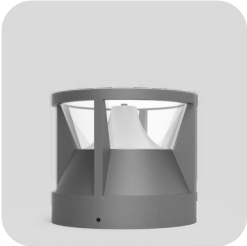
DM-LR7a[D13-D14]

DM-LR8a[D15-D16]

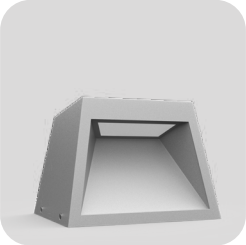
DM-LR9a[D17-D18]

DM-LR10a[D19-D20]

DM-LR11a[D21-D22]

DM-LR12a[D23-D24]

DM-LR13a[D25-D26]

DM-LR14a[D27-28]

DM-LR15a[D29-D30]

DM-LR16a[D31-D32]

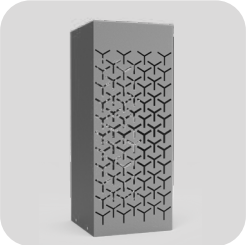
DM-LR17a[D33-D34]

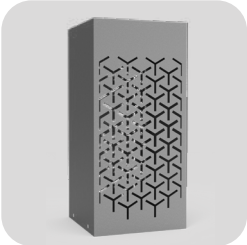
DM-LR18a[D35-D36]

DM-LR19a[D37-D38]

DM-LR20a[D39-D40]

Catalog

Lower

DM-LR21a[D41-D42]

DM-LR22a[D43-D44]

DM-LR23a[D45-D46]

DM-LR24a[D47-D48]

DM-LR25a[D49-D50]

DM-LR26a[D51-D52]

DM-LR27a[D53-D54]

DM-LR28a[D55-D56]

Catalog

Decorative

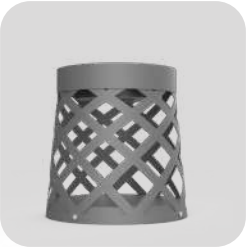
DM-DE1a[E1-E2]

DM-DE2a[E3-E4]

DM-DE3a[E5-E6]

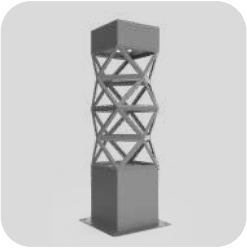
DM-DE4a[E7-E8]

DM-DE5a[E9-E10]

DM-DE6a[E11-E12]

DM-DE7a[E13-E14]

DM-DE8a[E15-E16]

DM-DE9a[E17-E18]

DM-DE10a[E19-E20]

DM-DE11a[E21-E22]

DM-DE12a[E23-E24]

DM-DE13a[E25-E26]

DM-DE14a[E27-E28]

DM-DE15a[E29-E30]

DM-DE16a[E31-E32]

DM-DE17a[E33-E34]

DM-DE18a[E35-E36]

DM-DE19a[E37-E38]

DM-DE20a[E39-E40]

Catalog

Decorative

DM-DE21a[E41-E42]

DM-DE22a[E43-E44]

DM-DE23a[E45-E46]

DM-DE24a[E47-E48]

DM-DE25a[E49-E50]

DM-DE26a[E51-E52]

DM-DE27a[E53-E54]

DM-DE28a[E55-E56]

Bollard light

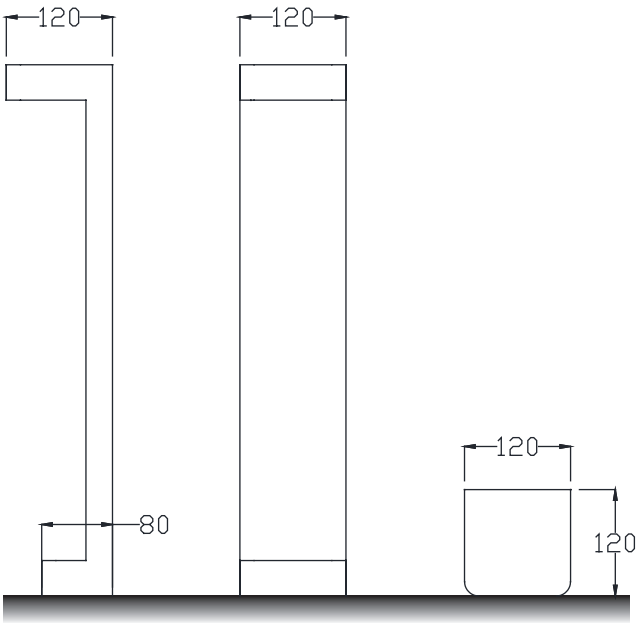

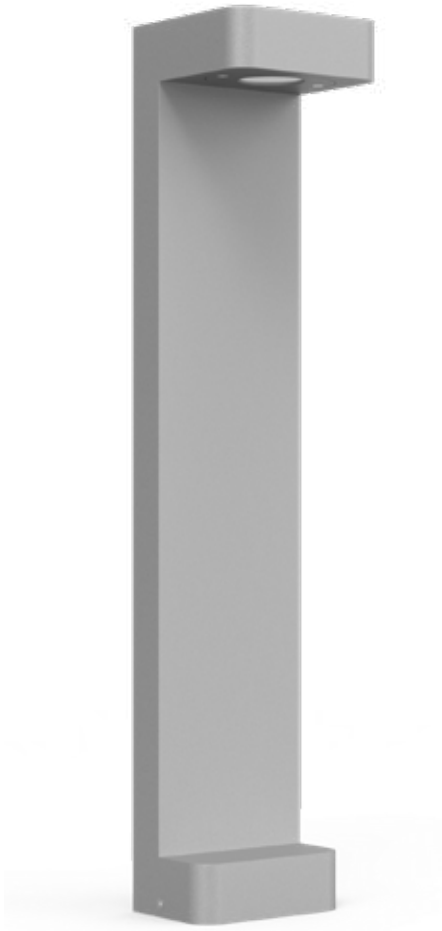

Installation plate

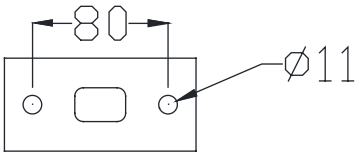

DM-SE1a

Colo(u)r temperature

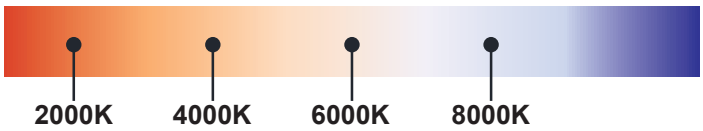

Bollard light

IP65

Rated power	12W	Power Factor	> 0.9
LED Quantity	1pcs	Life	> 50000H
Color Temperature	6000k/4000k/3000k	THD	< 15%
Luminous Flux	1100lm	Frequency Range	50/60HZ
Input Voltage	AC100~277V	Lnstallation Pipe Diameter	/
Protection Grade	IP65	CRI	> 90
Operating Temperature	-30~50℃		

DM-SE1a

Standard colours

9004 9006 9007 9016

Bollard light

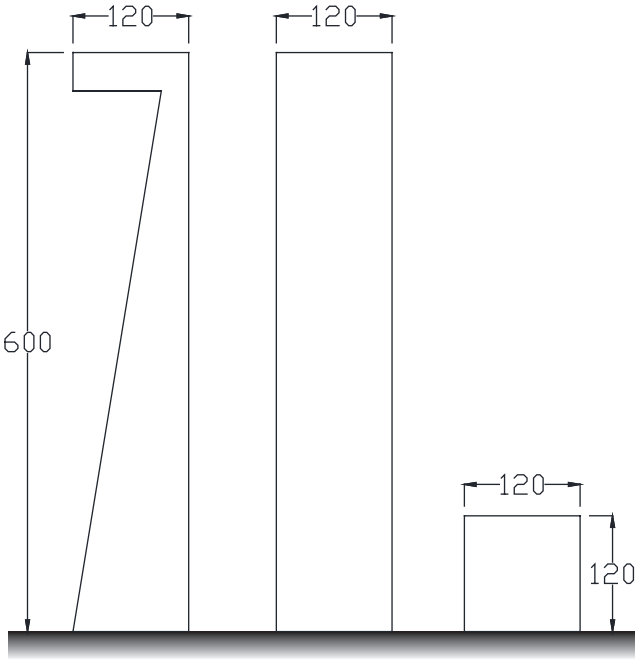

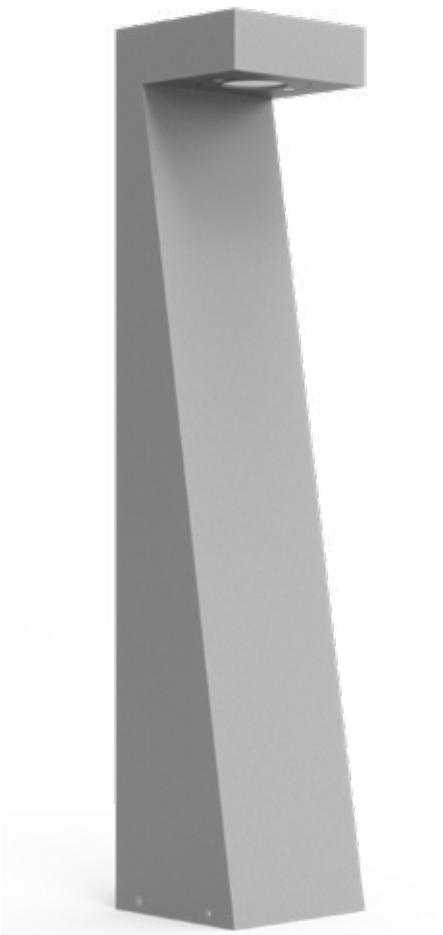

Installation plate

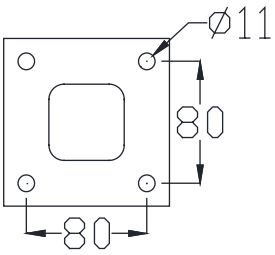

DM-SE2a

Colo(u)r temperature

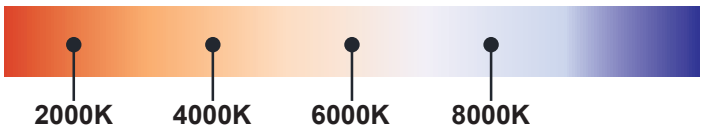

Bollard light

IP65

Rated power	12W	Power Factor	> 0.9
LED Quantity	1pcs	Life	> 50000H
Color Temperature	6000k/4000k/3000k	THD	< 15%
Luminous Flux	1100lm	Frequency Range	50/60HZ
Input Voltage	AC100~277V	Lnstallation Pipe Diameter	/
Protection Grade	IP65	CRI	> 90
Operating Temperature	-30~50℃		

DM-SE2a

Standard colours

9004 9006 9007 9016

Bollard light

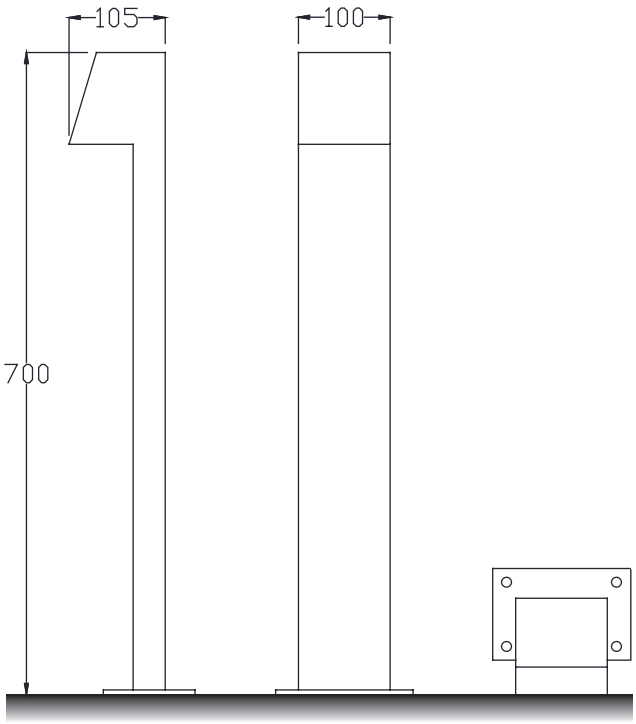

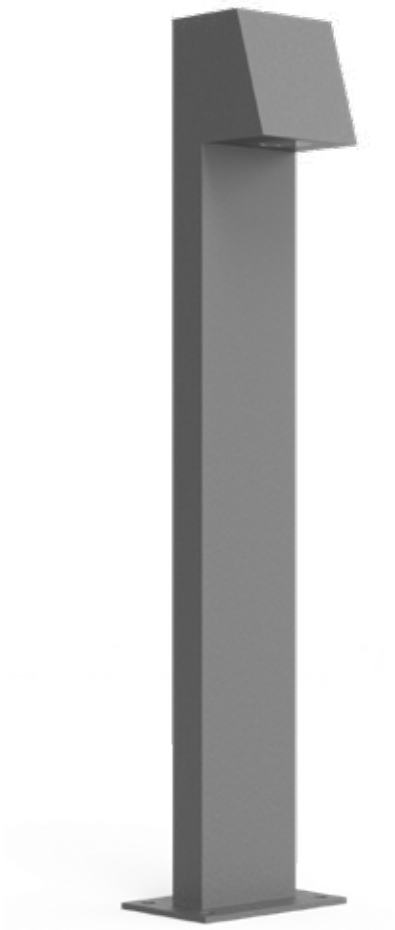

Installation plate

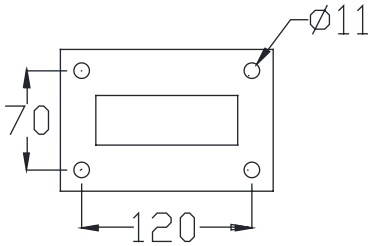

DM-SE3a

Colo(u)r temperature

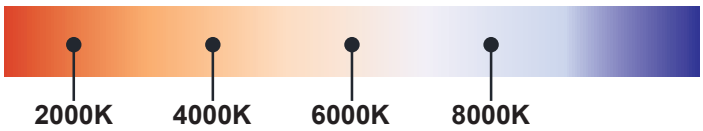

Bollard light

IP65

Rated power	12W	Power Factor	> 0.9
LED Quantity	1pcs	Life	> 50000H
Color Temperature	6000k/4000k/3000k	THD	< 15%
Luminous Flux	1100lm	Frequency Range	50/60HZ
Input Voltage	AC100~277V	Lnstallation Pipe Diameter	/
Protection Grade	IP65	CRI	> 90
Operating Temperature	-30~50℃		

DM-SE3a

Standard colours

9004 9006 9007 9016

Bollard light

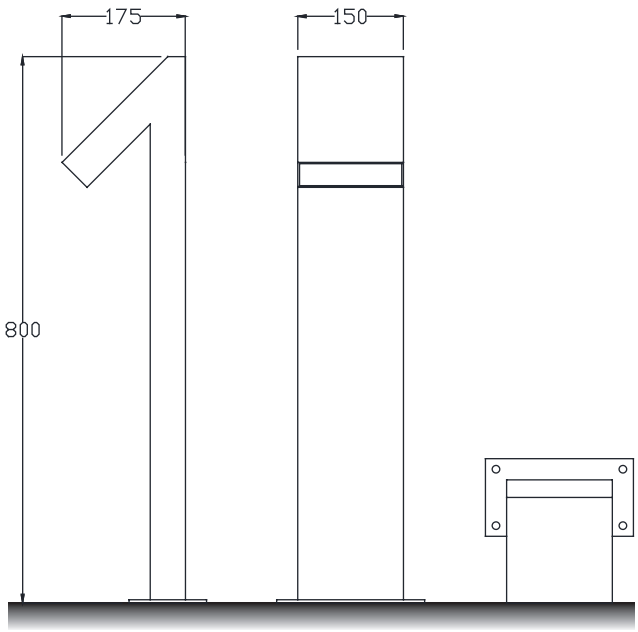

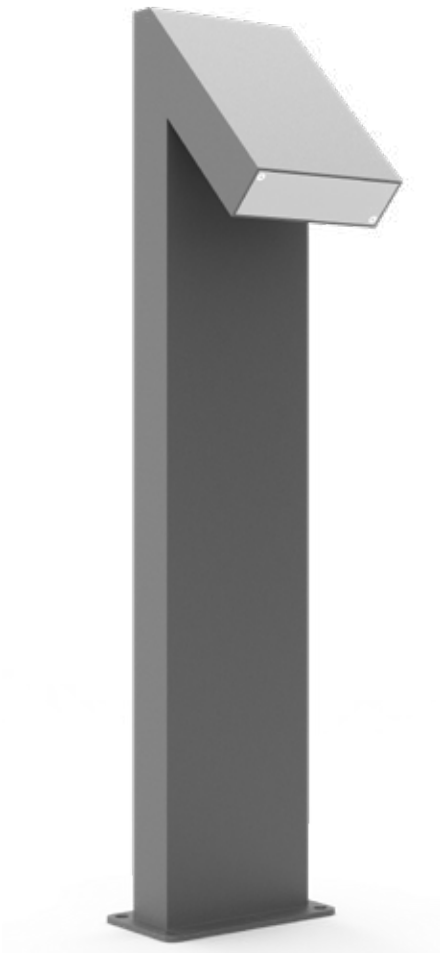

Installation plate

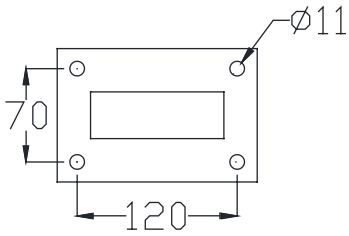

DM-SE4a

Colo(u)r temperature

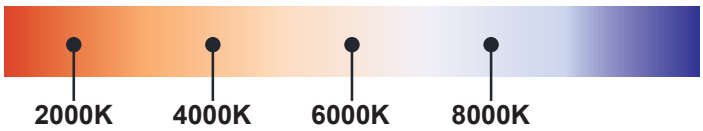

Bollard light

IP65

Rated power	12W	Power Factor	> 0.9
LED Quantity	1pcs	Life	> 50000H
Color Temperature	6000k/4000k/3000k	THD	< 15%
Luminous Flux	1100lm	Frequency Range	50/60HZ
Input Voltage	AC100~277V	Lnstallation Pipe Diameter	/
Protection Grade	IP65	CRI	> 90
Operating Temperature	-30~50℃		

DM-SE4a

Standard colours

9004 9006 9007 9016

Bollard light

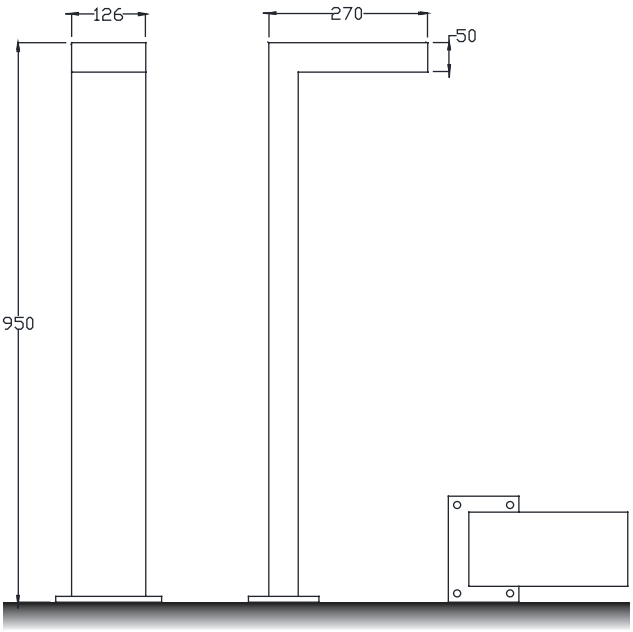

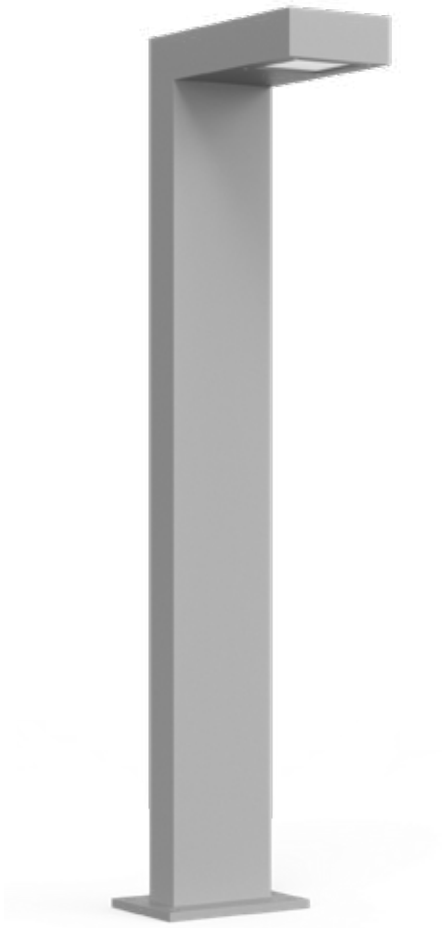

Installation plate

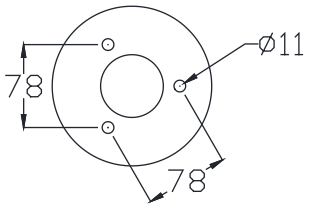

DM-SE5a

Colo(u)r temperature

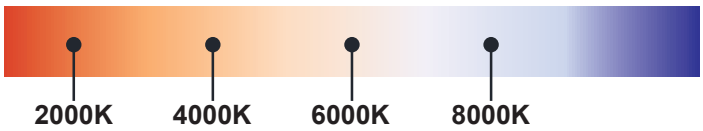

Bollard light

IP65

Rated power	12W	Power Factor	> 0.9
LED Quantity	1pcs	Life	> 50000H
Color Temperature	6000k/4000k/3000k	THD	< 15%
Luminous Flux	1100lm	Frequency Range	50/60HZ
Input Voltage	AC100~277V	Lnstallation Pipe Diameter	/
Protection Grade	IP65	CRI	> 90
Operating Temperature	-30~50℃		

DM-SE5a

Standard colours

9004 9006 9007 9016

Bollard light

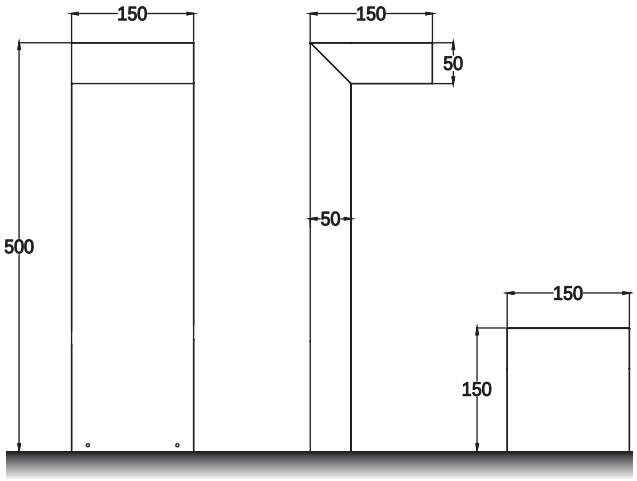

Installation plate

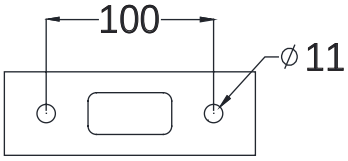

DM–SE6a

Colo(u)r temperature

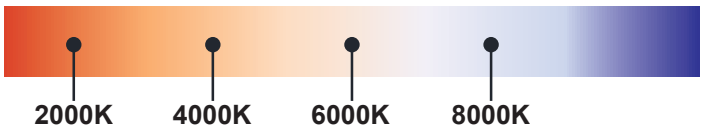

Bollard light

IP65

Rated power	12W	Power Factor	> 0.9
LED Quantity	1pcs	Life	> 50000H
Color Temperature	6000k/4000k/3000k	THD	< 15%
Luminous Flux	1100lm	Frequency Range	50/60HZ
Input Voltage	AC100~277V	Lnstallation Pipe Diameter	/
Protection Grade	IP65	CRI	> 90
Operating Temperature	-30~50℃		

DM-SE6a

Standard colours

9004 9006 9007 9016

Bollard light

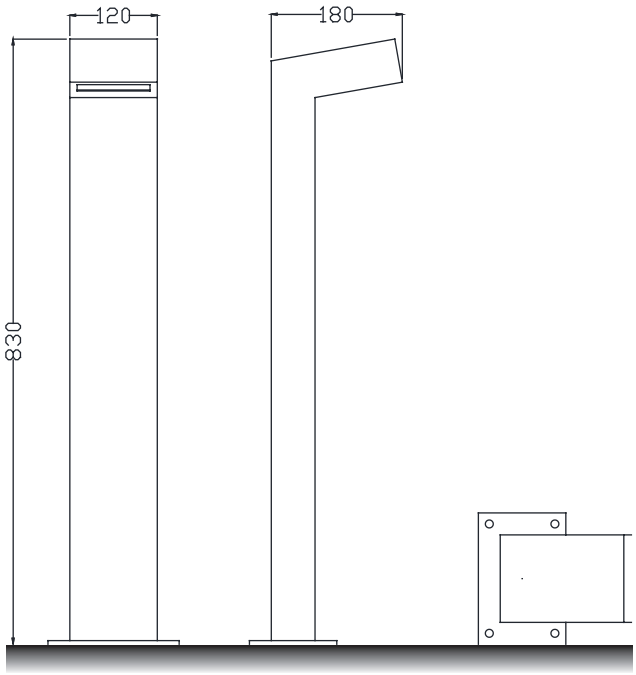

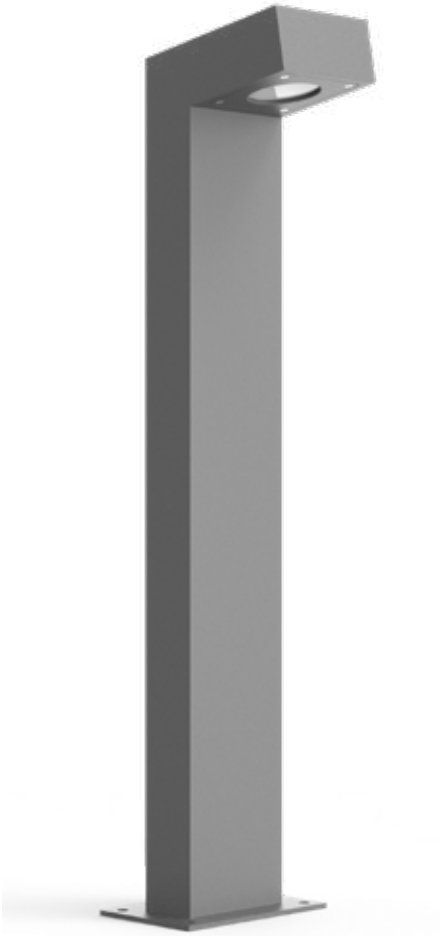

Installation plate

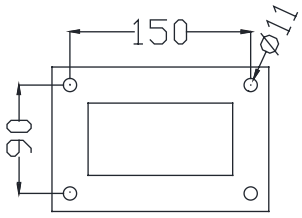

DM-SE7a

Colo(u)r temperature

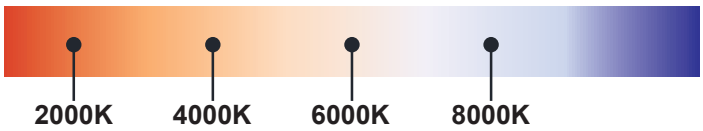

Bollard light

IP65

Rated power	12W	Power Factor	> 0.9
LED Quantity	1pcs	Life	> 50000H
Color Temperature	6000k/4000k/3000k	THD	< 15%
Luminous Flux	1100lm	Frequency Range	50/60HZ
Input Voltage	AC100~277V	Lnstallation Pipe Diameter	/
Protection Grade	IP65	CRI	> 90
Operating Temperature	-30~50℃		

DM-SE7a

Standard colours

9004 9006 9007 9016

Bollard light

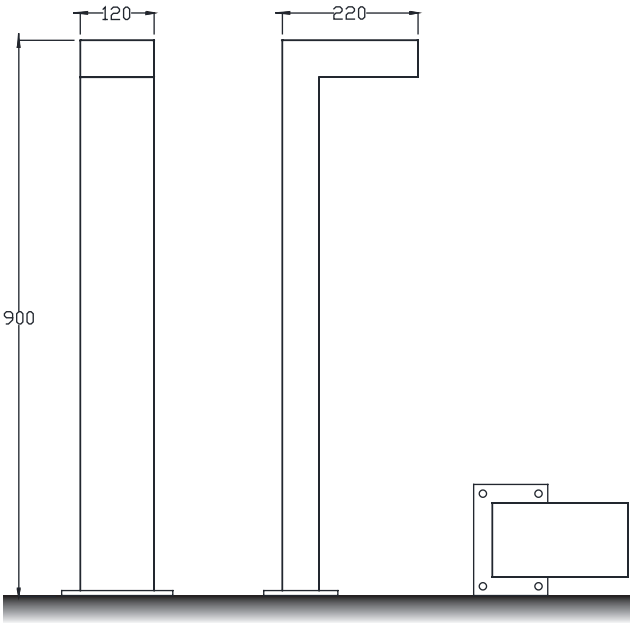

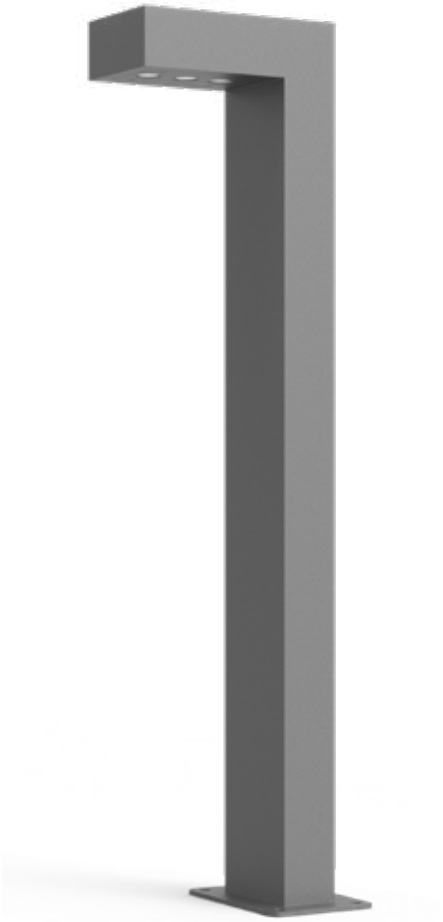

Installation plate

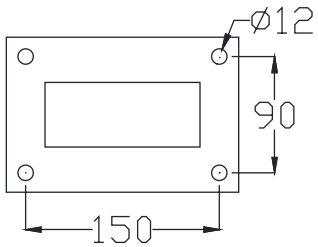

DM-SE8a

Colo(u)r temperature

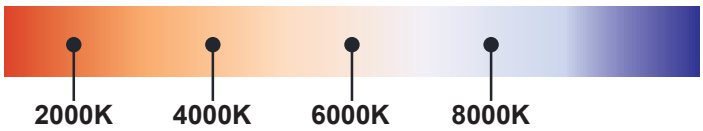

Bollard light

IP65

Rated power	12W	Power Factor	> 0.9
LED Quantity	1pcs	Life	> 50000H
Color Temperature	6000k/4000k/3000k	THD	< 15%
Luminous Flux	1100lm	Frequency Range	50/60HZ
Input Voltage	AC100~277V	Lnstallation Pipe Diameter	/
Protection Grade	IP65	CRI	> 90
Operating Temperature	-30~50℃		

DM-SE8a

Standard colours

9004 9006 9007 9016

Bollard light

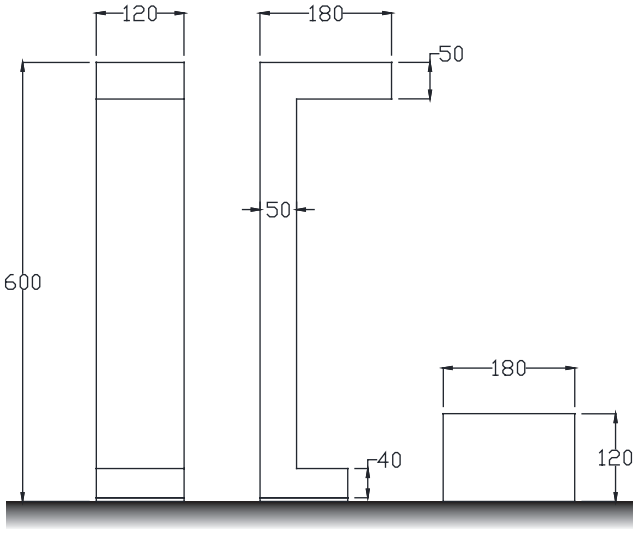

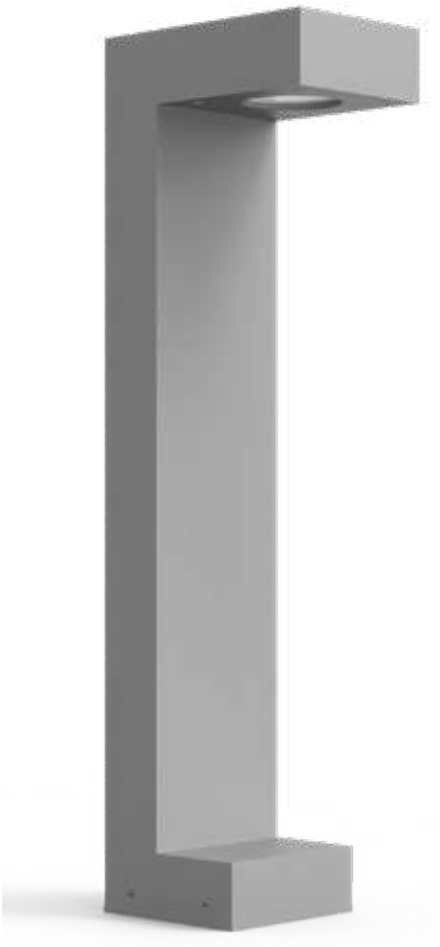

Installation plate

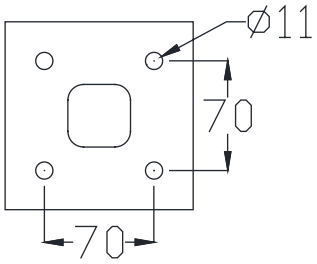

DM-SE9a

Colo(u)r temperature

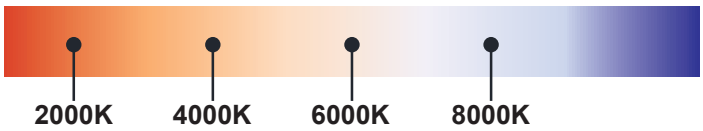

Bollard light

IP65

Rated power	12W	Power Factor	> 0.9
LED Quantity	1pcs	Life	> 50000H
Color Temperature	6000k/4000k/3000k	THD	< 15%
Luminous Flux	1100lm	Frequency Range	50/60HZ
Input Voltage	AC100~277V	Lnstallation Pipe Diameter	/
Protection Grade	IP65	CRI	> 90
Operating Temperature	-30~50℃		

DM-SE9a

Standard colours

9004 9006 9007 9016

Bollard light

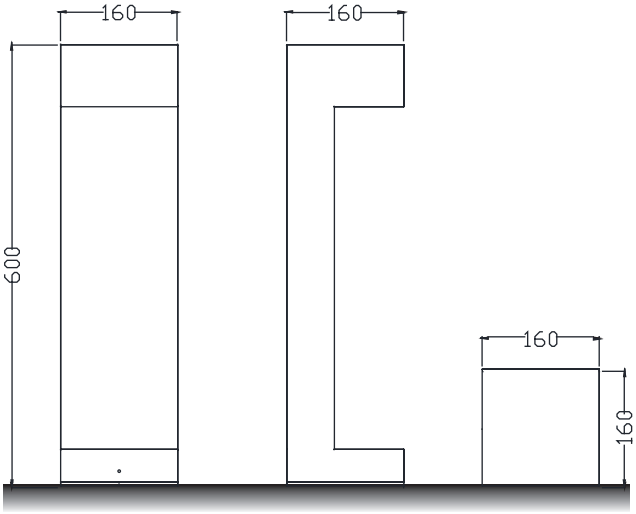

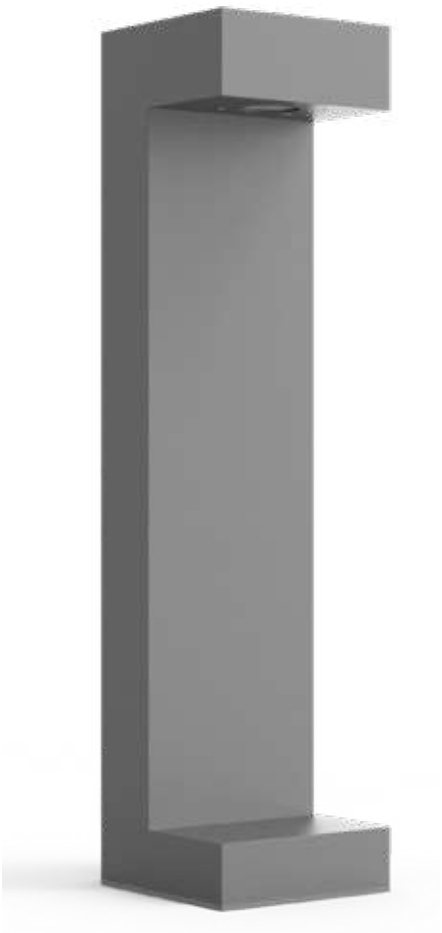

Installation plate

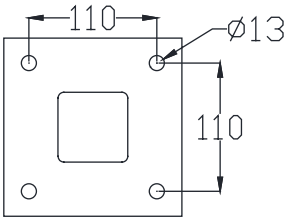

DM-SE10a

Colo(u)r temperature

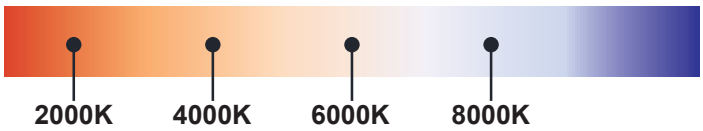

Bollard light

IP65

Rated power	12W	Power Factor	> 0.9
LED Quantity	1pcs	Life	> 50000H
Color Temperature	6000k/4000k/3000k	THD	< 15%
Luminous Flux	1100lm	Frequency Range	50/60HZ
Input Voltage	AC100~277V	Lnstallation Pipe Diameter	/
Protection Grade	IP65	CRI	> 90
Operating Temperature	-30~50℃		

DM-SE10a

Standard colours

9004 9006 9007 9016

Bollard light

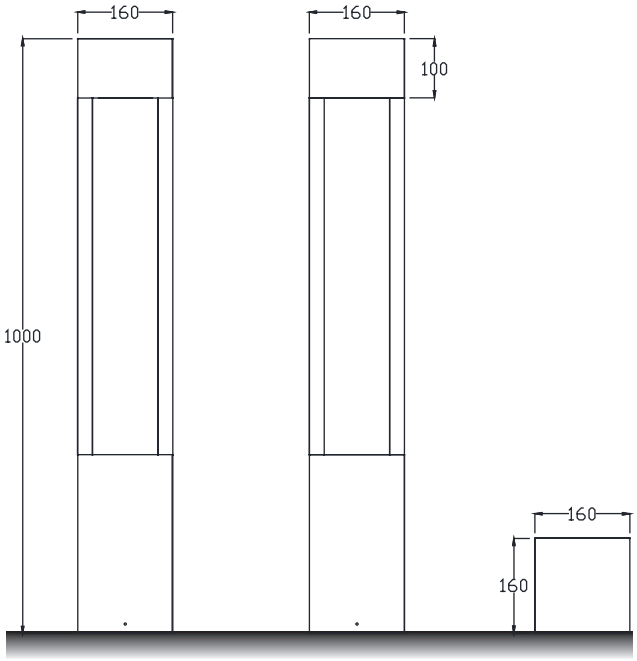

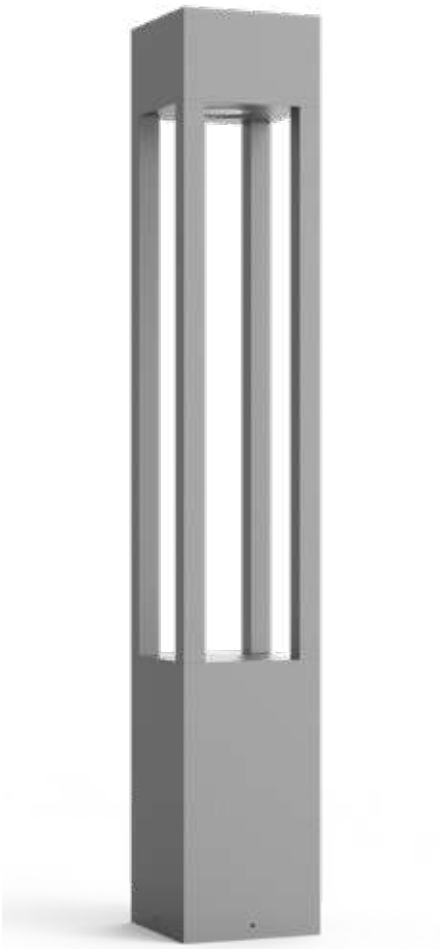

Installation plate

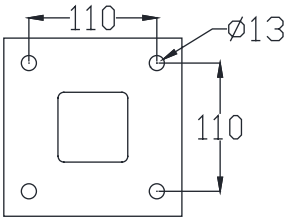

DM-SE11a

Colo(u)r temperature

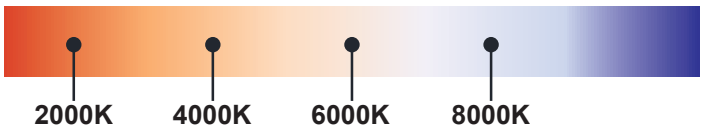

Bollard light

IP65

Rated power	12W	Power Factor	> 0.9
LED Quantity	1pcs	Life	> 50000H
Color Temperature	6000k/4000k/3000k	THD	< 15%
Luminous Flux	1100lm	Frequency Range	50/60HZ
Input Voltage	AC100~277V	Lnstallation Pipe Diameter	/
Protection Grade	IP65	CRI	> 90
Operating Temperature	-30~50℃		

DM-SE11a

Standard colours

9004 9006 9007 9016

Bollard light

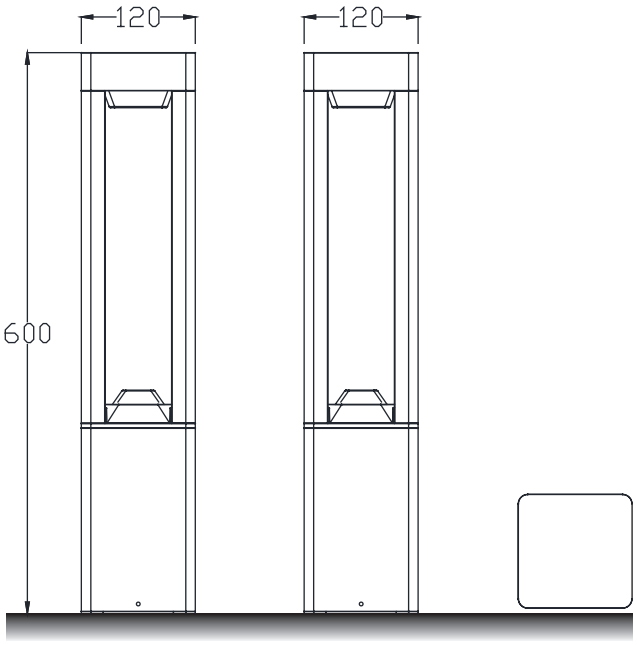

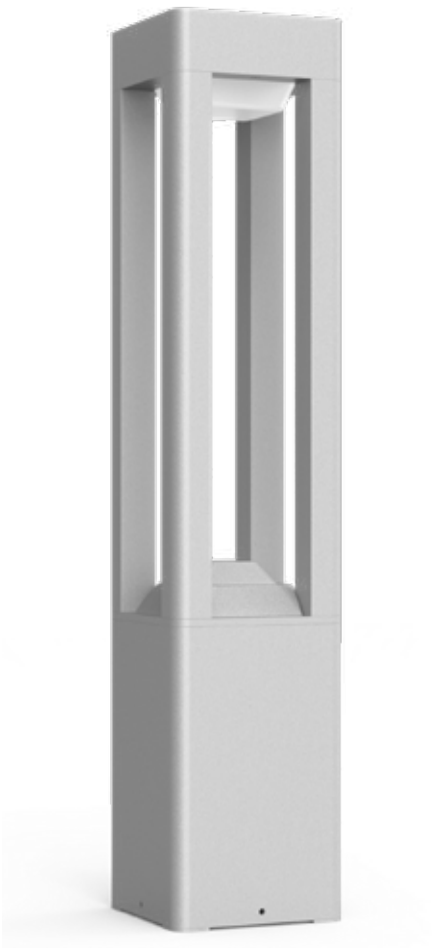

Installation plate

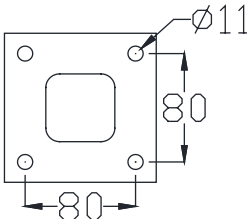

DM-SE12a

Colo(u)r temperature

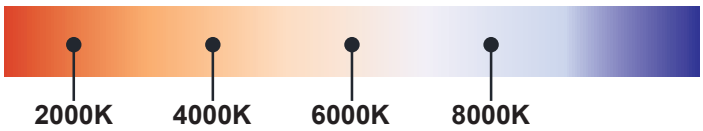

Bollard light

IP65

Rated power	12W	Power Factor	> 0.9
LED Quantity	1pcs	Life	> 50000H
Color Temperature	6000k/4000k/3000k	THD	< 15%
Luminous Flux	1100lm	Frequency Range	50/60HZ
Input Voltage	AC100~277V	Lnstallation Pipe Diameter	/
Protection Grade	IP65	CRI	> 90
Operating Temperature	-30~50℃		

DM-SE12a

Standard colours

9004 9006 9007 9016

Bollard light

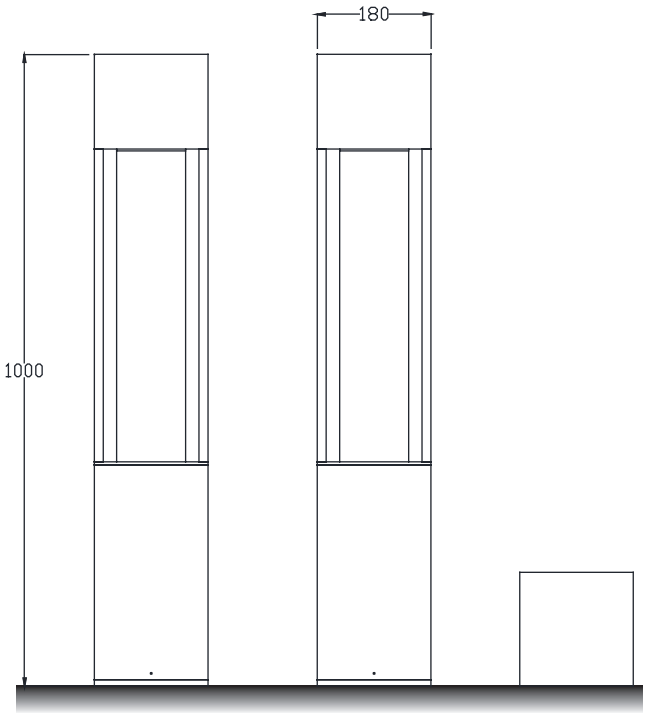

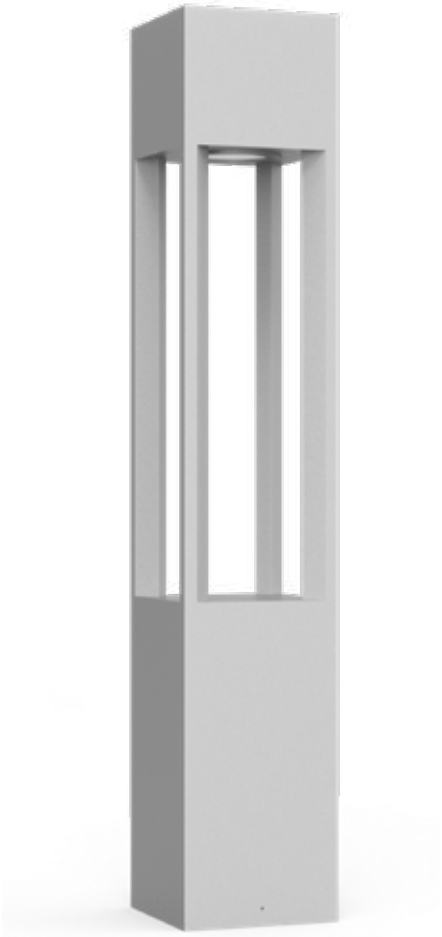

Installation plate

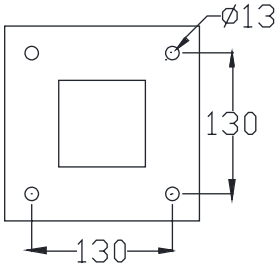

DM-SE13a

Colo(u)r temperature

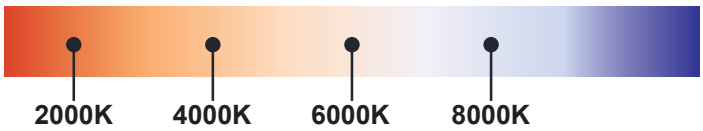

Bollard light

IP65

Rated power	12W	Power Factor	> 0.9
LED Quantity	1pcs	Life	> 50000H
Color Temperature	6000k/4000k/3000k	THD	< 15%
Luminous Flux	1100lm	Frequency Range	50/60HZ
Input Voltage	AC100~277V	Lnstallation Pipe Diameter	/
Protection Grade	IP65	CRI	> 90
Operating Temperature	-30~50℃		

DM-SE13a

Standard colours

9004 9006 9007 9016

Bollard light

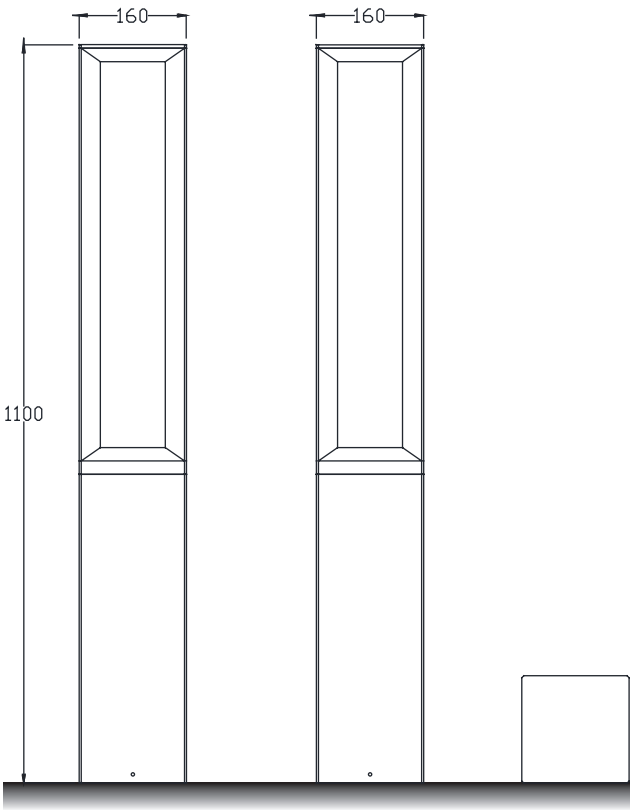

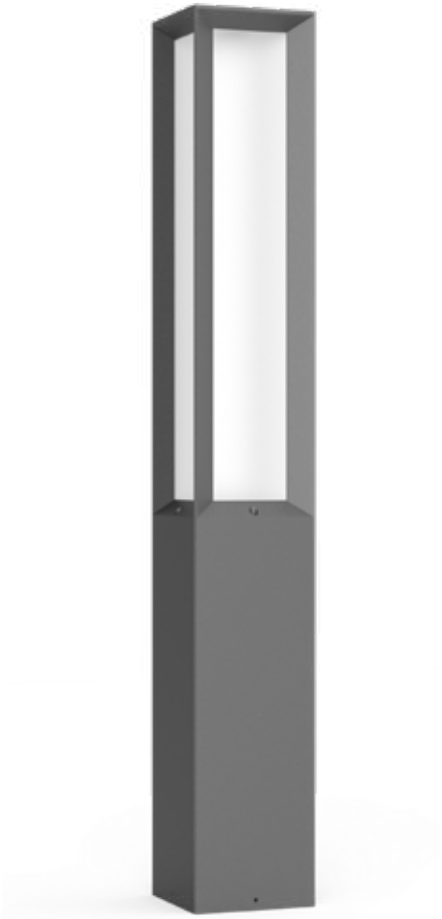

Installation plate

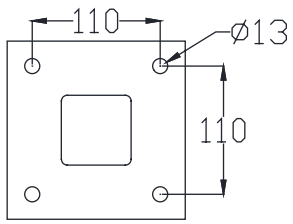

DM-SE14a

Colo(u)r temperature

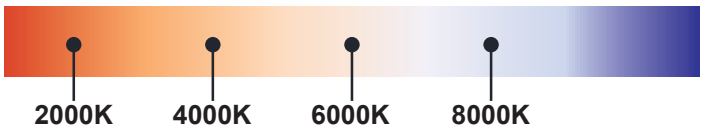

Bollard light

IP65

Rated power	12W	Power Factor	> 0.9
LED Quantity	1pcs	Life	> 50000H
Color Temperature	6000k/4000k/3000k	THD	< 15%
Luminous Flux	1100lm	Frequency Range	50/60HZ
Input Voltage	AC100~277V	Lnstallation Pipe Diameter	/
Protection Grade	IP65	CRI	> 90
Operating Temperature	-30~50℃		

DM-SE14a

Standard colours

9004 9006 9007 9016

Bollard light

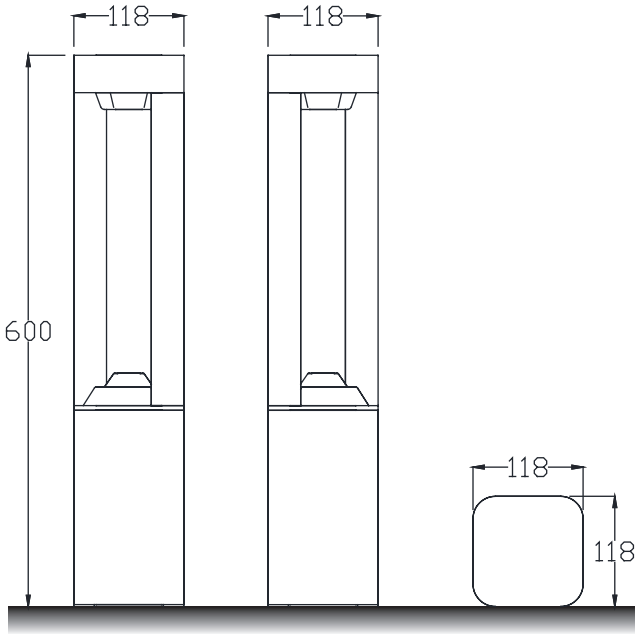

Installation plate

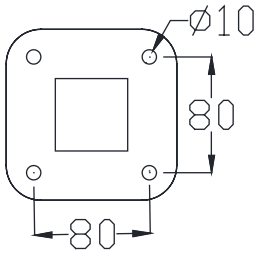

DM-SE15a

Colo(u)r temperature

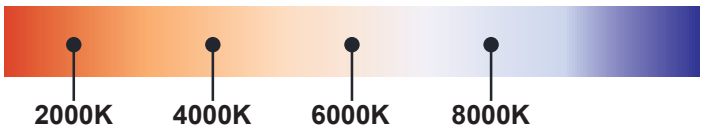

Bollard light

IP65

Rated power	12W	Power Factor	> 0.9
LED Quantity	1pcs	Life	> 50000H
Color Temperature	6000k/4000k/3000k	THD	< 15%
Luminous Flux	1100lm	Frequency Range	50/60HZ
Input Voltage	AC100~277V	Lnstallation Pipe Diameter	/
Protection Grade	IP65	CRI	> 90
Operating Temperature	-30~50℃		

DM-SE15a

Standard colours

9004 9006 9007 9016

Bollard light

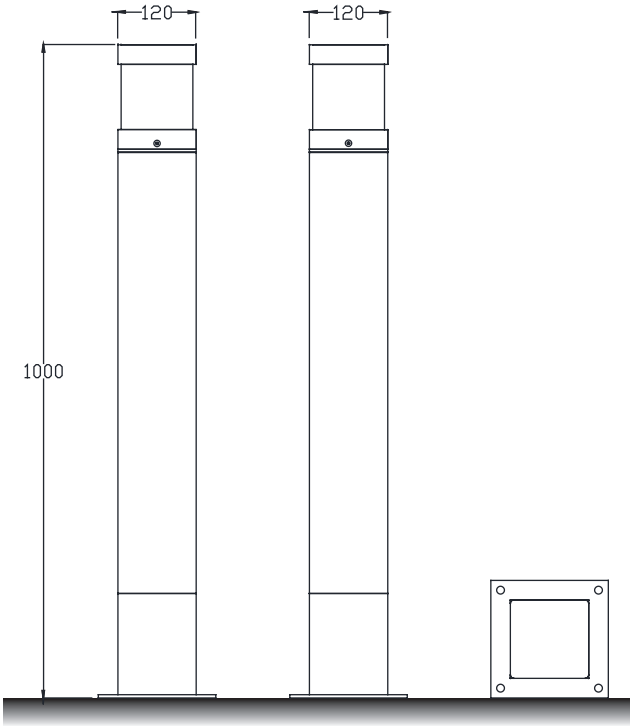

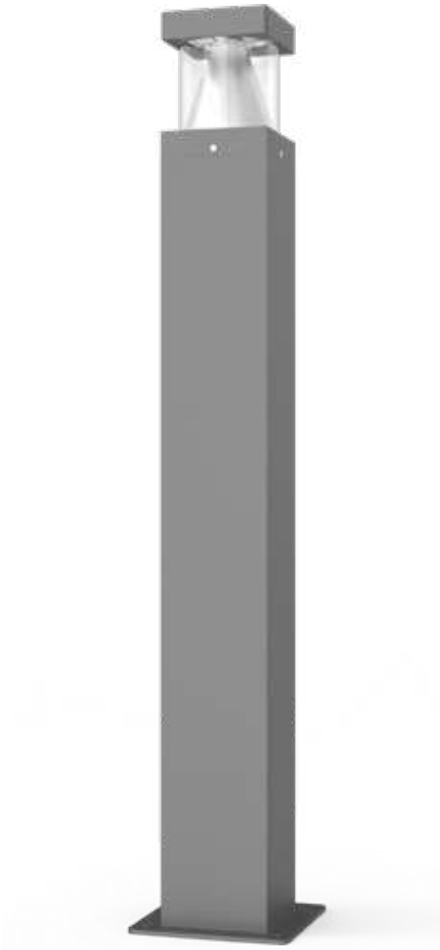

Installation plate

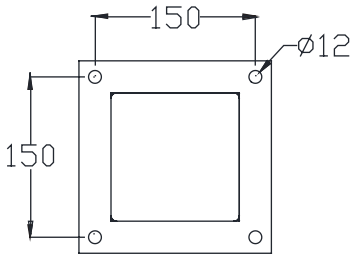

DM-SE16a

Colo(u)r temperature

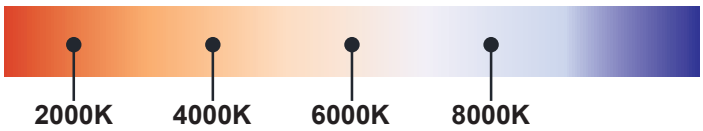

Bollard light

IP65

Rated power	12W	Power Factor	> 0.9
LED Quantity	1pcs	Life	> 50000H
Color Temperature	6000k/4000k/3000k	THD	< 15%
Luminous Flux	1100lm	Frequency Range	50/60HZ
Input Voltage	AC100~277V	Lnstallation Pipe Diameter	/
Protection Grade	IP65	CRI	> 90
Operating Temperature	-30~50℃		

DM-SE16a

Standard colours

9004 9006 9007 9016

Bollard light

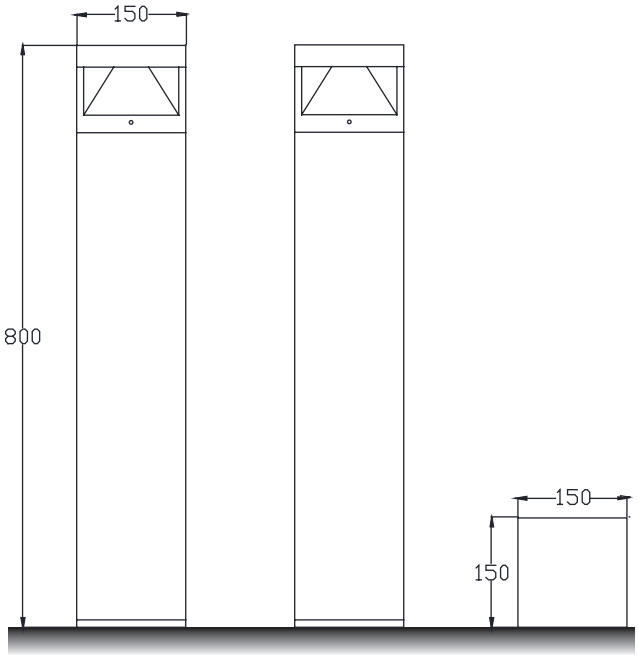

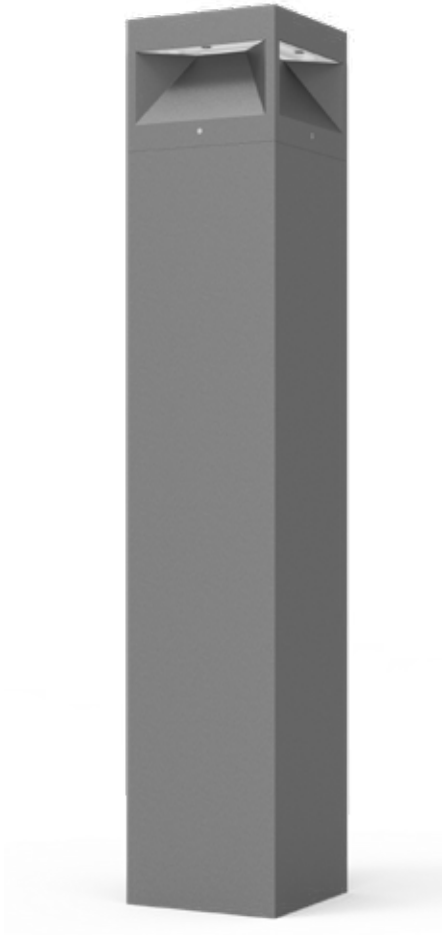

Installation plate

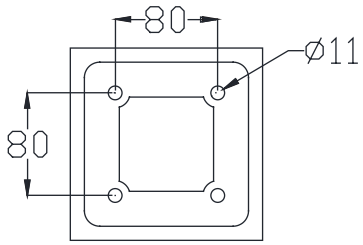

DM-SE17a

Colo(u)r temperature

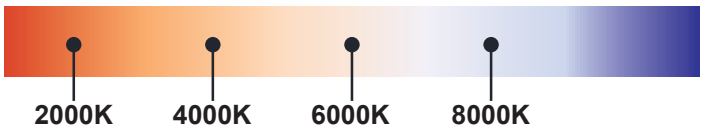

Bollard light

IP65

Rated power	12W	Power Factor	> 0.9
LED Quantity	1pcs	Life	> 50000H
Color Temperature	6000k/4000k/3000k	THD	< 15%
Luminous Flux	1100lm	Frequency Range	50/60HZ
Input Voltage	AC100~277V	Lnstallation Pipe Diameter	/
Protection Grade	IP65	CRI	> 90
Operating Temperature	-30~50℃		

DM-SE17a

Standard colours

9004 9006 9007 9016

Bollard light

Installation plate

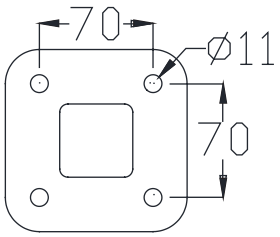

DM-SE18a

Colo(u)r temperature

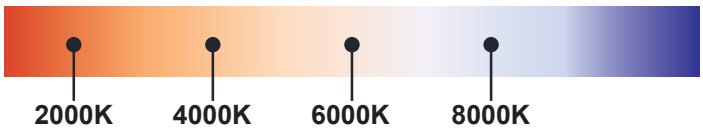

Bollard light

IP65

Rated power	12W	Power Factor	> 0.9
LED Quantity	1pcs	Life	> 50000H
Color Temperature	6000k/4000k/3000k	THD	< 15%
Luminous Flux	1100lm	Frequency Range	50/60HZ
Input Voltage	AC100~277V	Lnstallation Pipe Diameter	/
Protection Grade	IP65	CRI	> 90
Operating Temperature	-30~50℃		

DM-SE18a

Standard colours

9004 9006 9007 9016

Bollard light

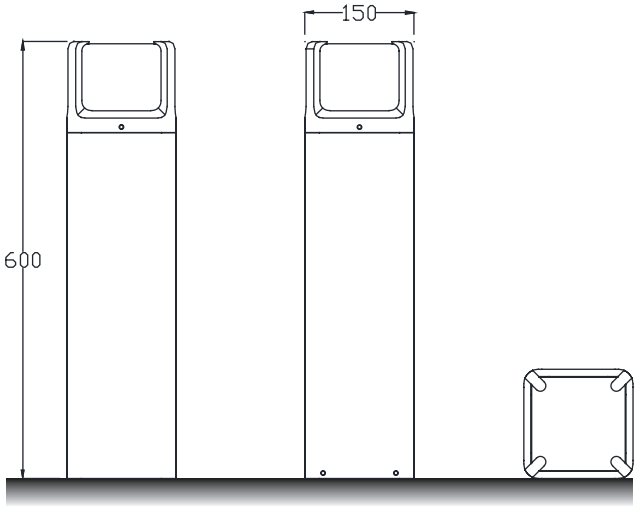

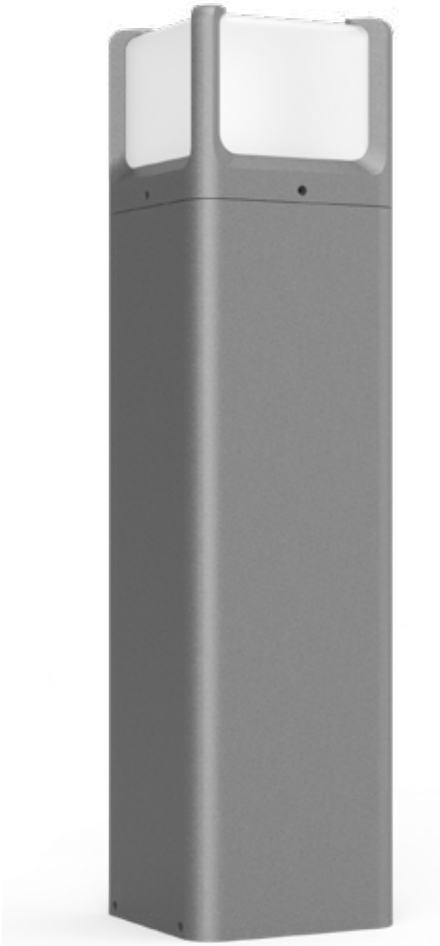

Installation plate

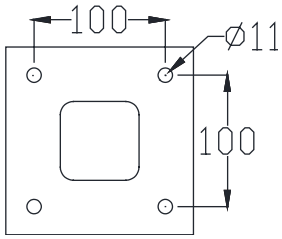

DM-SE19a

Colo(u)r temperature

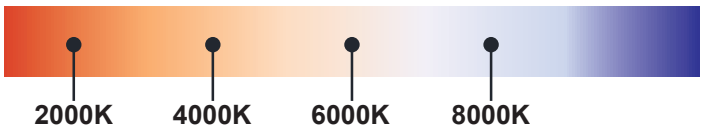

Bollard light

IP65

Rated power	12W	Power Factor	> 0.9
LED Quantity	1pcs	Life	> 50000H
Color Temperature	6000k/4000k/3000k	THD	< 15%
Luminous Flux	1100lm	Frequency Range	50/60HZ
Input Voltage	AC100~277V	Lnstallation Pipe Diameter	/
Protection Grade	IP65	CRI	> 90
Operating Temperature	-30~50℃		

DM-SE19a

Standard colours

9004 9006 9007 9016

Bollard light

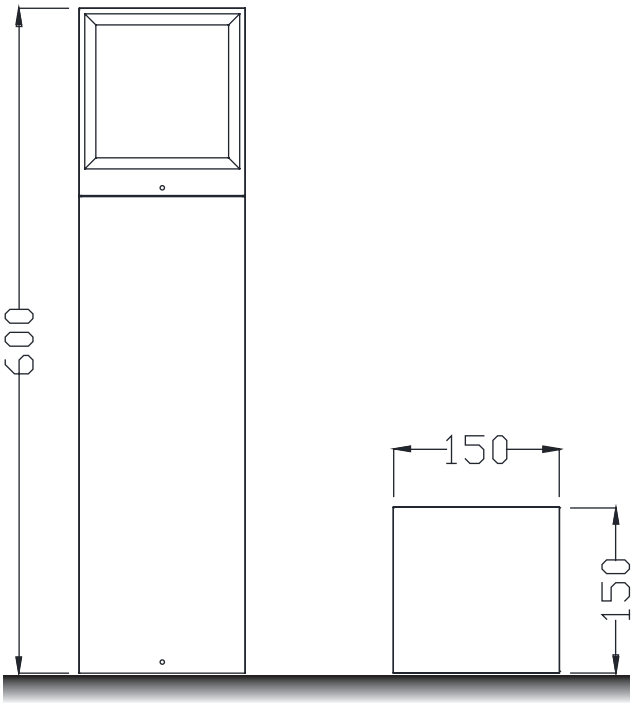

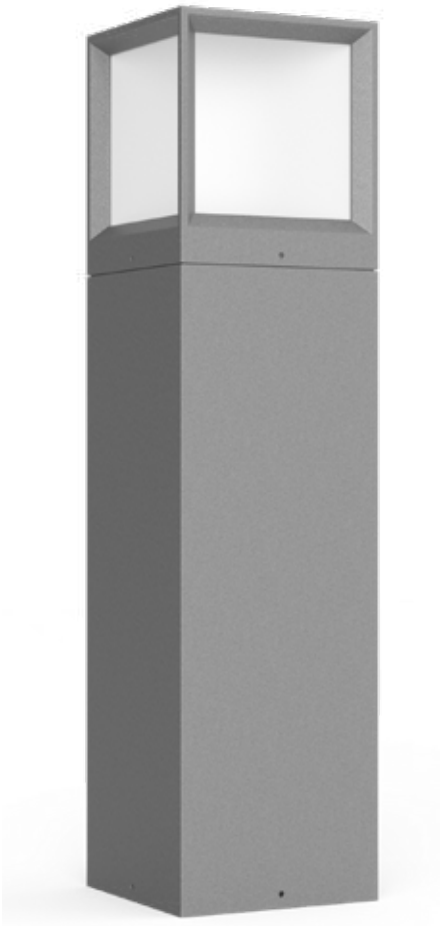

Installation plate

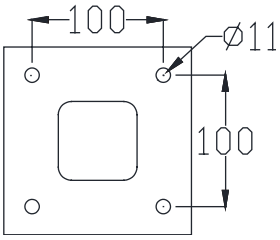

DM-SE20a

Colo(u)r temperature

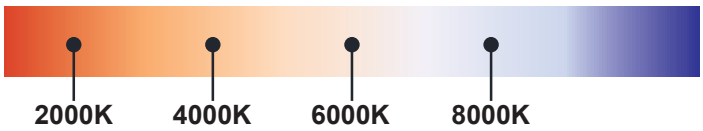

Bollard light

IP65

Rated power	12W	Power Factor	> 0.9
LED Quantity	1pcs	Life	> 50000H
Color Temperature	6000k/4000k/3000k	THD	< 15%
Luminous Flux	1100lm	Frequency Range	50/60HZ
Input Voltage	AC100~277V	Lnstallation Pipe Diameter	/
Protection Grade	IP65	CRI	> 90
Operating Temperature	-30~50℃		

DM-SE20a

Standard colours

9004 9006 9007 9016

Bollard light

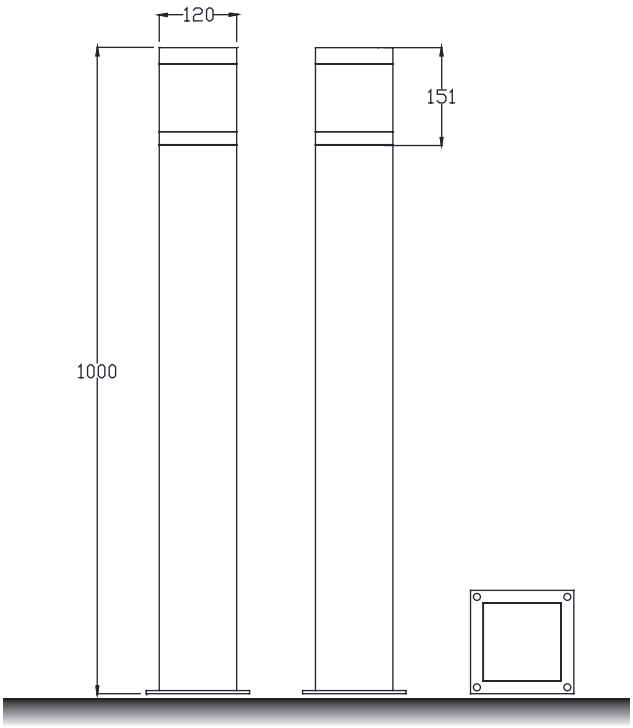

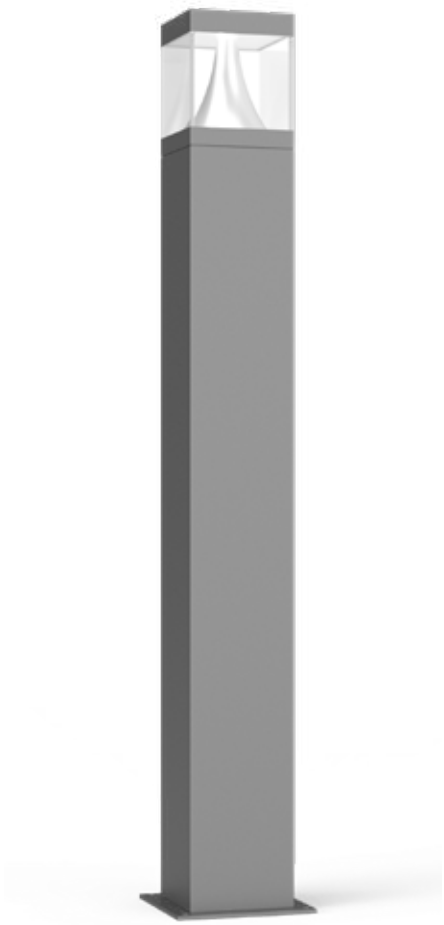

Installation plate

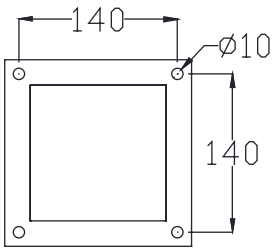

DM-SE21a

Colo(u)r temperature

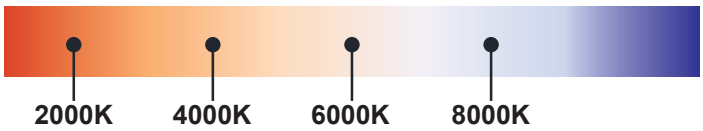

Bollard light

IP65

Rated power	12W	Power Factor	> 0.9
LED Quantity	1pcs	Life	> 50000H
Color Temperature	6000k/4000k/3000k	THD	< 15%
Luminous Flux	1100lm	Frequency Range	50/60HZ
Input Voltage	AC100~277V	Lnstallation Pipe Diameter	/
Protection Grade	IP65	CRI	> 90
Operating Temperature	-30~50℃		

DM-SE21a

Standard colours

9004 9006 9007 9016

Bollard light

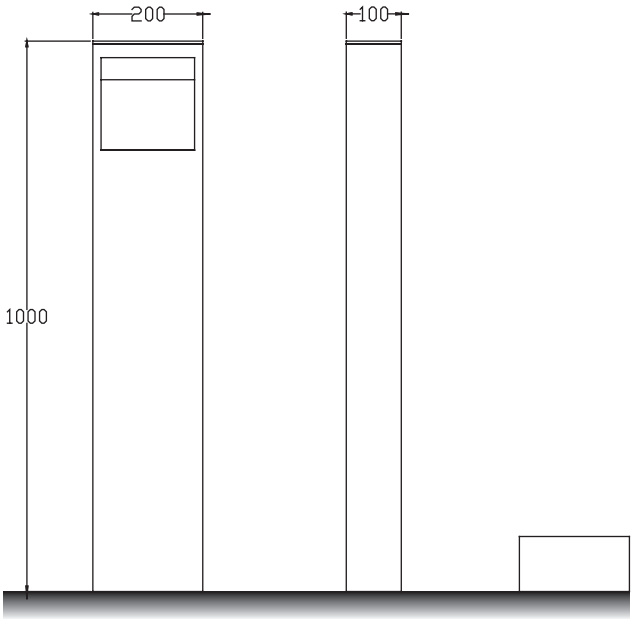

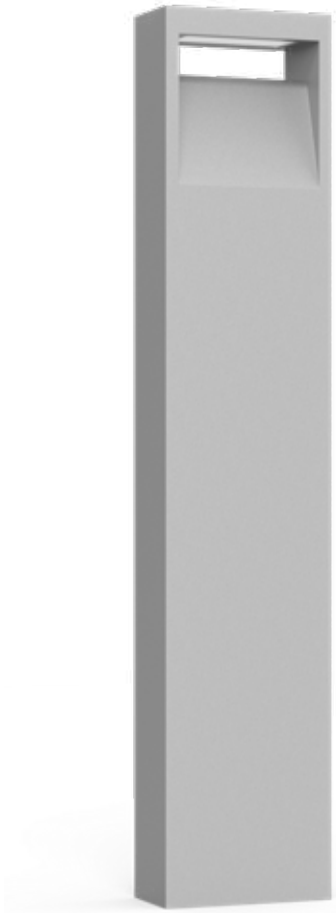

Installation plate

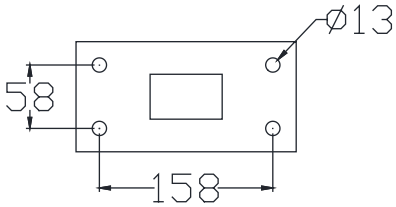

DM-SE22a

Colo(u)r temperature

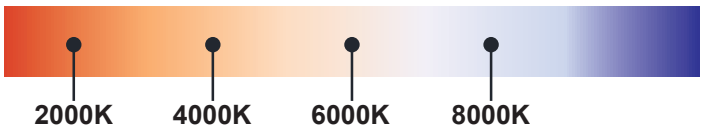

Bollard light

IP65

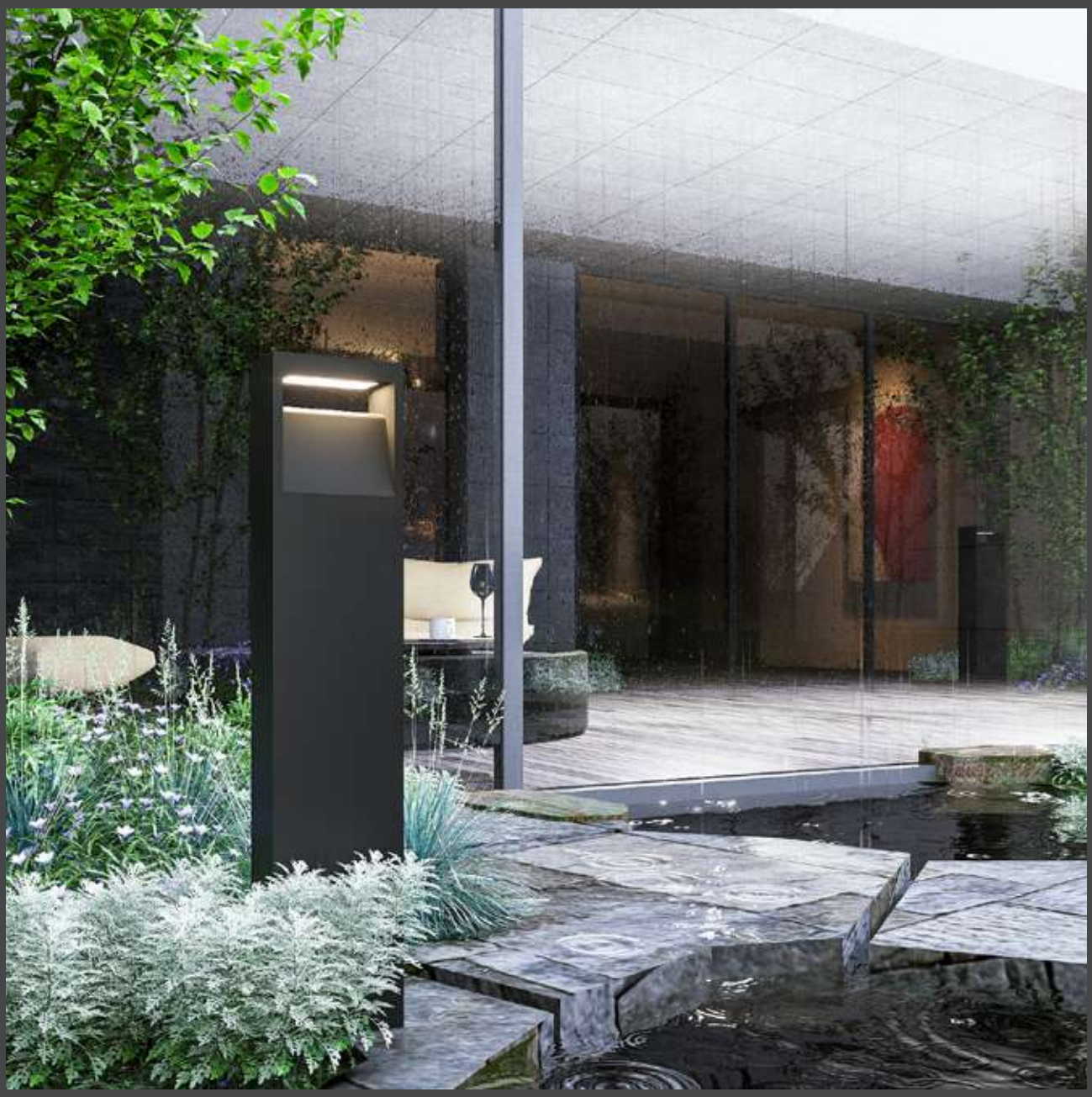

Rated power	12W	Power Factor	> 0.9
LED Quantity	1pcs	Life	> 50000H
Color Temperature	6000k/4000k/3000k	THD	< 15%
Luminous Flux	1100lm	Frequency Range	50/60HZ
Input Voltage	AC100~277V	Lnstallation Pipe Diameter	/
Protection Grade	IP65	CRI	> 90
Operating Temperature	-30~50℃		

DM-SE22a

Standard colours

9004 9006 9007 9016

Bollard light

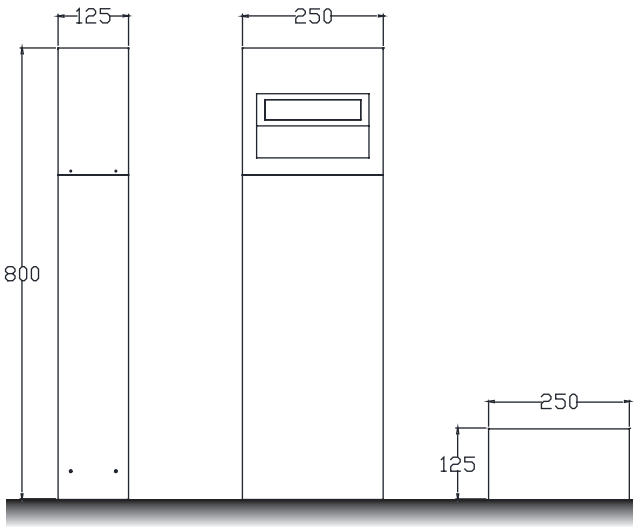

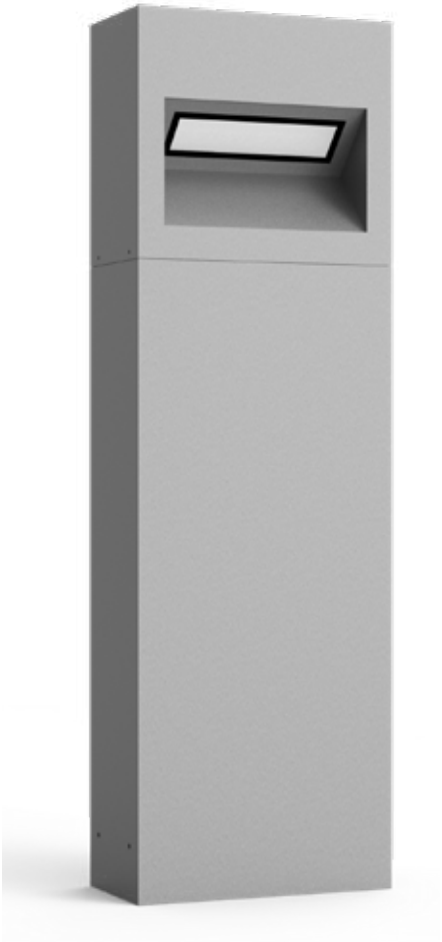

Installation plate

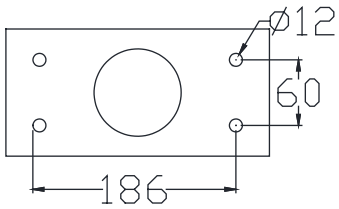

DM-SE23a

Colo(u)r temperature

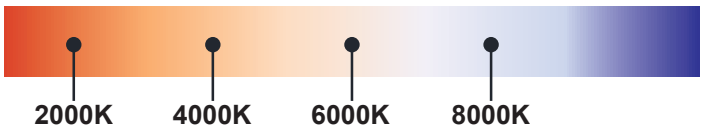

Bollard light

IP65

Rated power	12W	Power Factor	> 0.9
LED Quantity	1pcs	Life	> 50000H
Color Temperature	6000k/4000k/3000k	THD	< 15%
Luminous Flux	1100lm	Frequency Range	50/60HZ
Input Voltage	AC100~277V	Lnstallation Pipe Diameter	/
Protection Grade	IP65	CRI	> 90
Operating Temperature	-30~50℃		

DM-SE23a

Standard colours

9004 9006 9007 9016

Bollard light

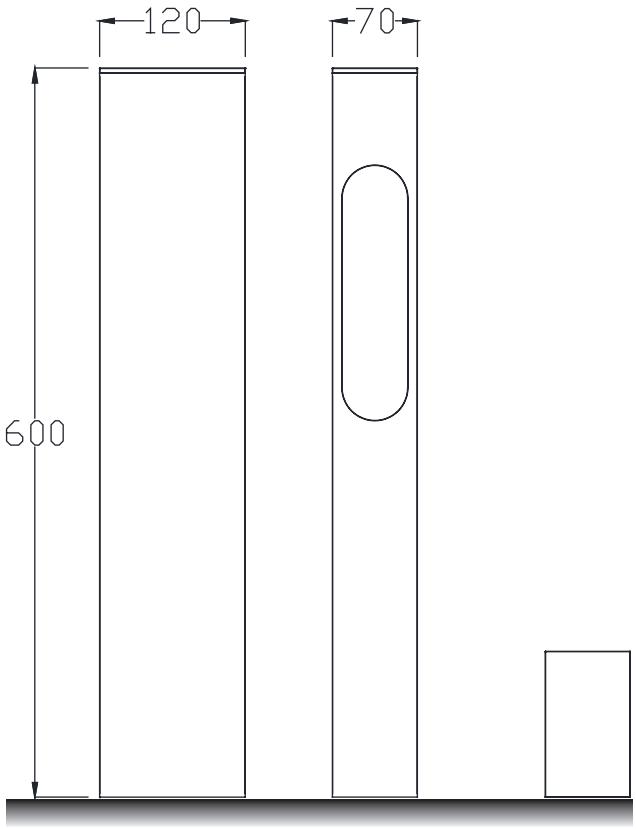

Installation plate

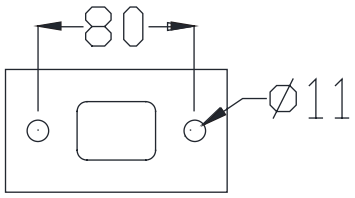

DM-SE24a

Colo(u)r temperature

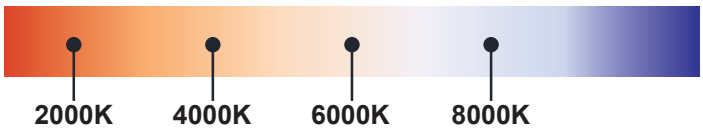

Bollard light

IP65

Rated power	12W	Power Factor	> 0.9
LED Quantity	1pcs	Life	> 50000H
Color Temperature	6000k/4000k/3000k	THD	< 15%
Luminous Flux	1100lm	Frequency Range	50/60HZ
Input Voltage	AC100~277V	Lnstallation Pipe Diameter	/
Protection Grade	IP65	CRI	> 90
Operating Temperature	-30~50℃		

DM-SE24a

Standard colours

9004 9006 9007 9016

Bollard light

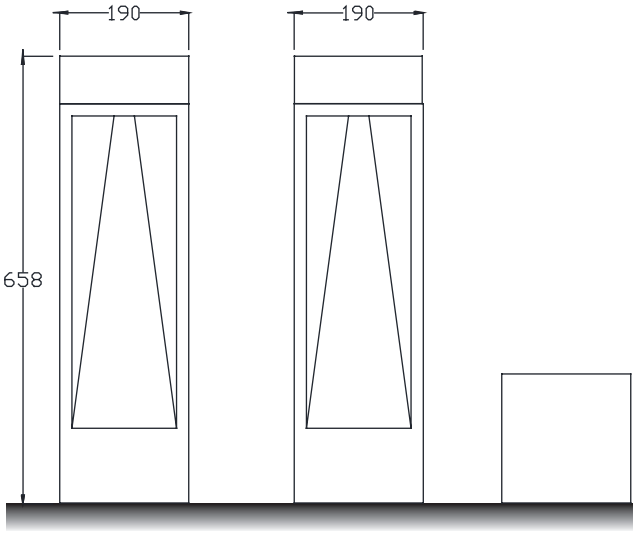

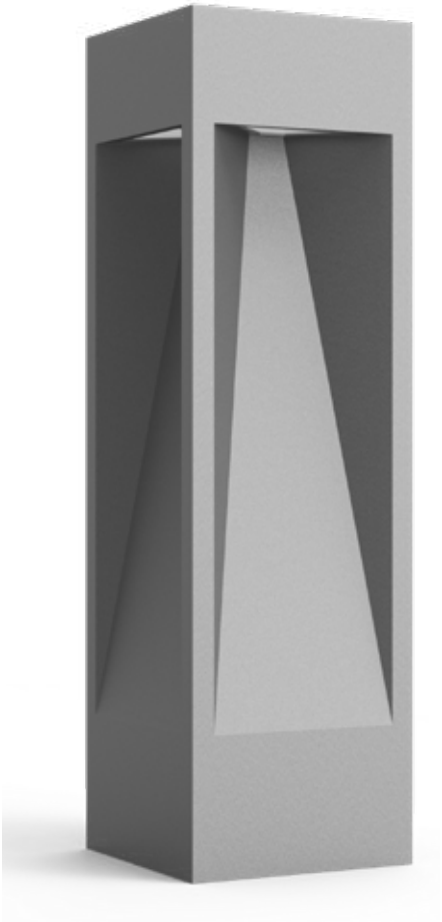

Installation plate

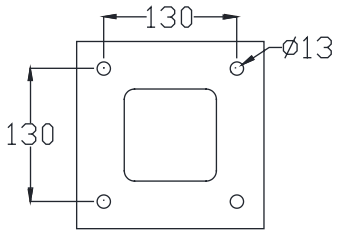

DM-SE25a

Colo(u)r temperature

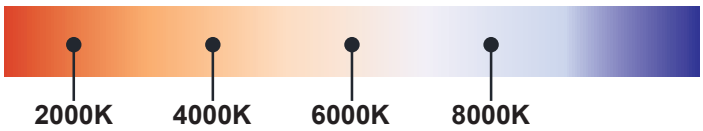

Bollard light

IP65

Rated power	12W	Power Factor	> 0.9
LED Quantity	1pcs	Life	> 50000H
Color Temperature	6000k/4000k/3000k	THD	< 15%
Luminous Flux	1100lm	Frequency Range	50/60HZ
Input Voltage	AC100~277V	Lnstallation Pipe Diameter	/
Protection Grade	IP65	CRI	> 90
Operating Temperature	-30~50℃		

DM-SE25a

Standard colours

9004 9006 9007 9016

Bollard light

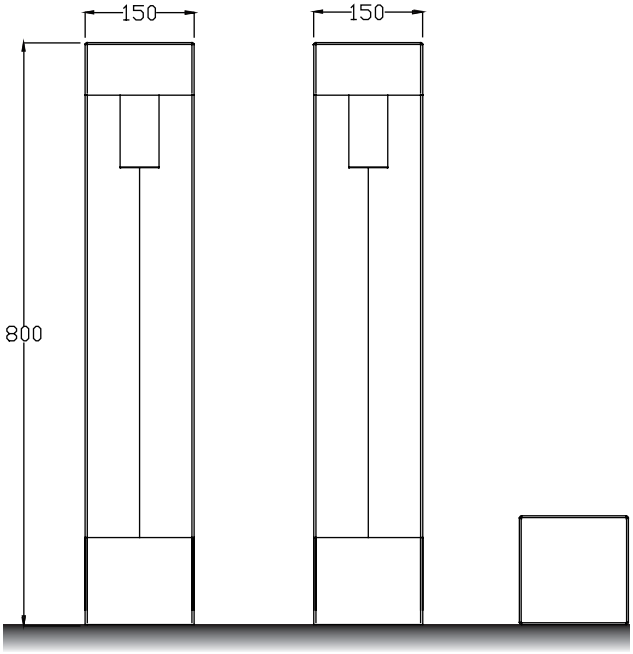

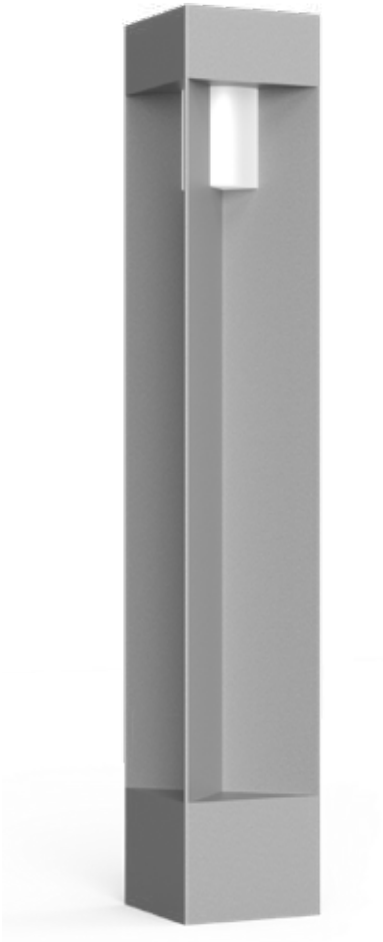

Installation plate

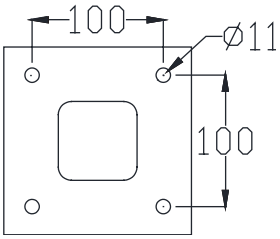

DM-SE26a

Colo(u)r temperature

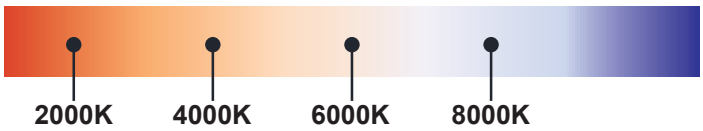

Bollard light

IP65

Rated power	12W	Power Factor	> 0.9
LED Quantity	1pcs	Life	> 50000H
Color Temperature	6000k/4000k/3000k	THD	< 15%
Luminous Flux	1100lm	Frequency Range	50/60HZ
Input Voltage	AC100~277V	Lnstallation Pipe Diameter	/
Protection Grade	IP65	CRI	> 90
Operating Temperature	-30~50℃		

DM-SE26a

Standard colours

9004 9006 9007 9016

Bollard light

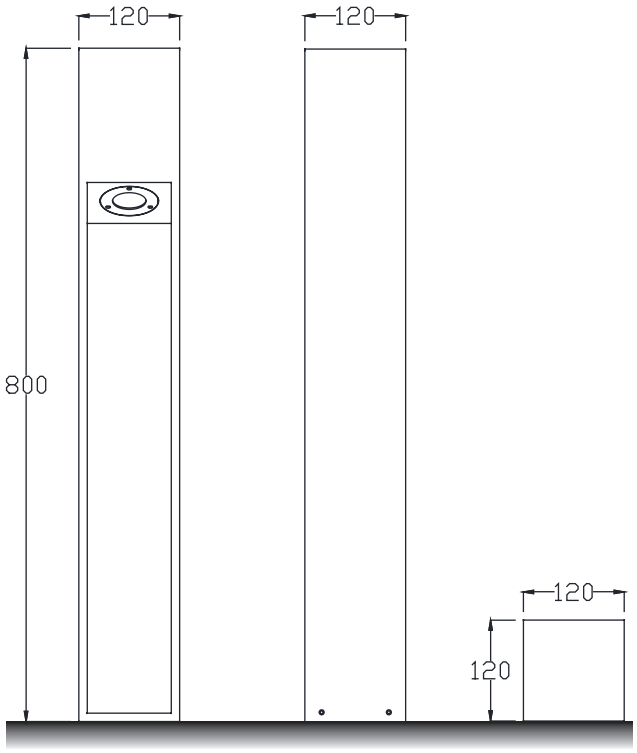

Installation plate

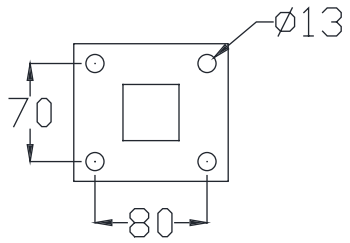

DM-SE27a

Colo(u)r temperature

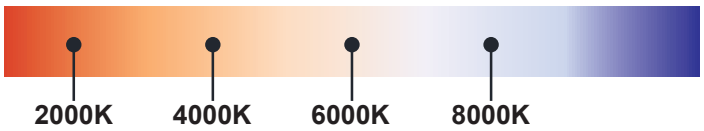

Bollard light

IP65

Rated power	12W	Power Factor	> 0.9
LED Quantity	1pcs	Life	> 50000H
Color Temperature	6000k/4000k/3000k	THD	< 15%
Luminous Flux	1100lm	Frequency Range	50/60HZ
Input Voltage	AC100~277V	Lnstallation Pipe Diameter	/
Protection Grade	IP65	CRI	> 90
Operating Temperature	-30~50℃		

DM-SE27a

Standard colours

9004 9006 9007 9016

Bollard light

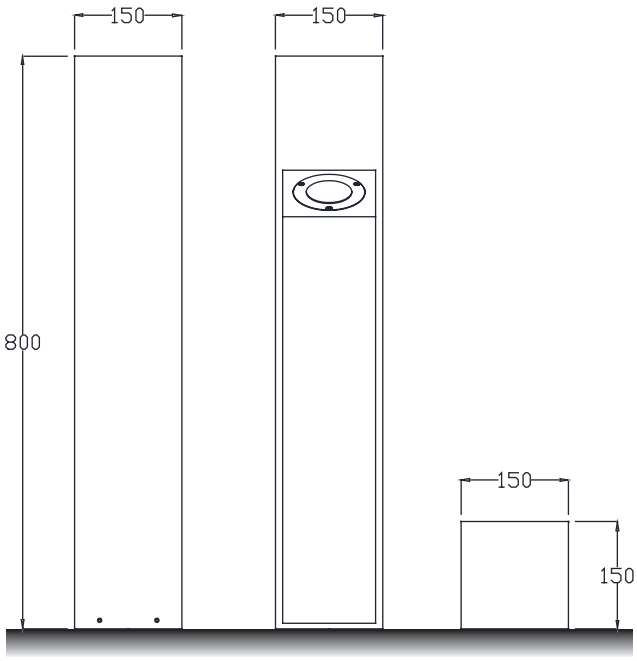

Installation plate

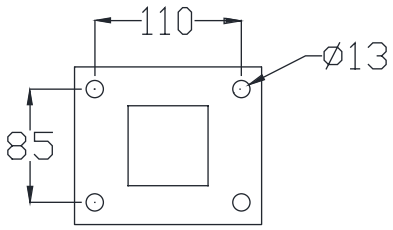

DM-SE27b

Colo(u)r temperature

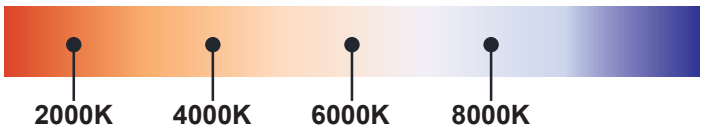

Bollard light

IP65

Rated power	12W	Power Factor	> 0.9
LED Quantity	1pcs	Life	> 50000H
Color Temperature	6000k/4000k/3000k	THD	< 15%
Luminous Flux	1100lm	Frequency Range	50/60HZ
Input Voltage	AC100~277V	Lnstallation Pipe Diameter	/
Protection Grade	IP65	CRI	> 90
Operating Temperature	-30~50℃		

DM-SE27b

Standard colours

9004 9006 9007 9016

Bollard light

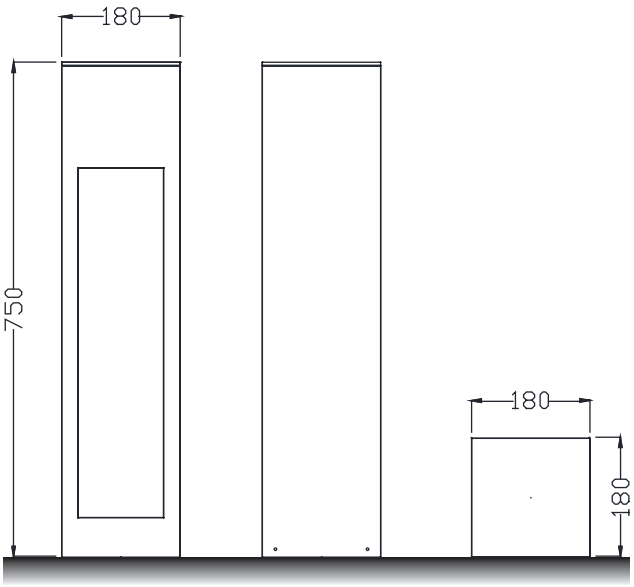

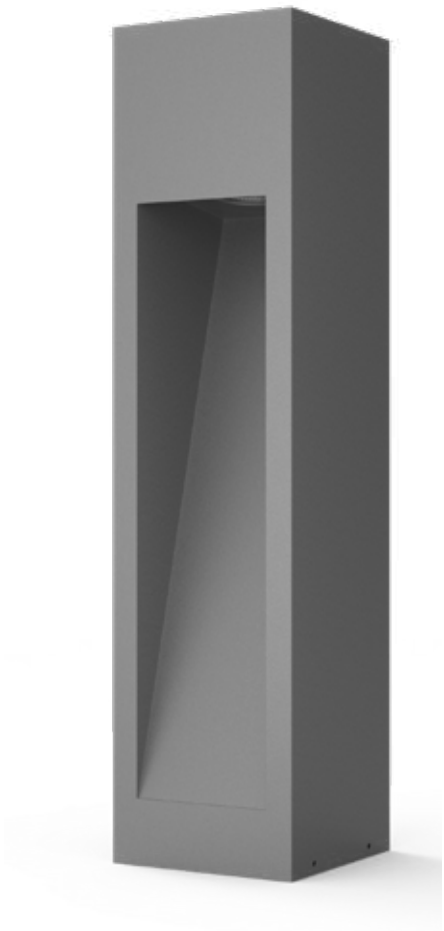

Installation plate

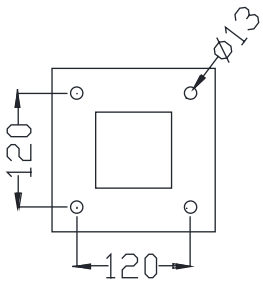

DM-SE28a

Colo(u)r temperature

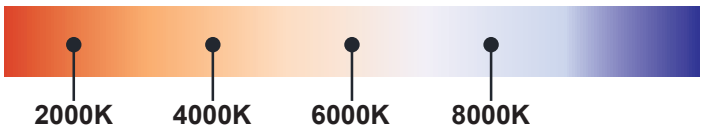

Bollard light

IP65

Rated power	12W	Power Factor	> 0.9
LED Quantity	1pcs	Life	> 50000H
Color Temperature	6000k/4000k/3000k	THD	< 15%
Luminous Flux	1100lm	Frequency Range	50/60HZ
Input Voltage	AC100~277V	Lnstallation Pipe Diameter	/
Protection Grade	IP65	CRI	> 90
Operating Temperature	-30~50℃		

DM-SE28a

Standard colours

9004 9006 9007 9016

Bollard light

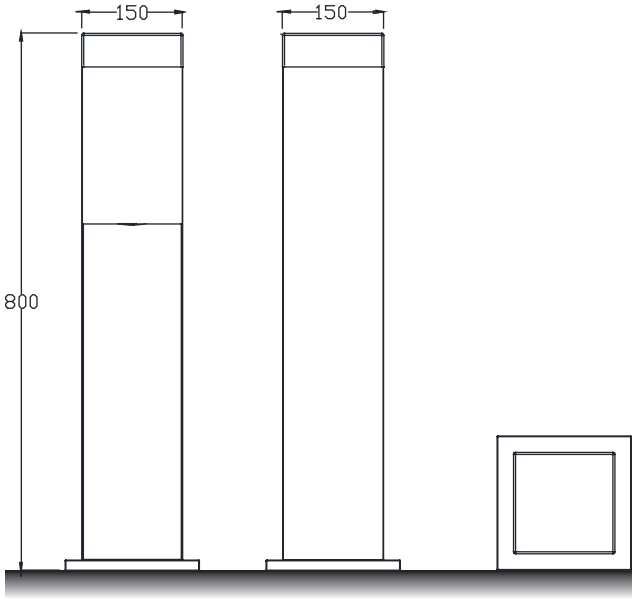

Installation plate

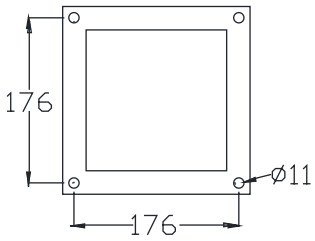

DM-SE29a

Colo(u)r temperature

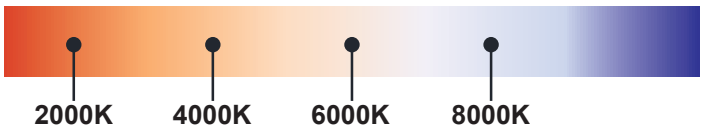

Bollard light

IP65

Rated power	12W	Power Factor	> 0.9
LED Quantity	1pcs	Life	> 50000H
Color Temperature	6000k/4000k/3000k	THD	< 15%
Luminous Flux	1100lm	Frequency Range	50/60HZ
Input Voltage	AC100~277V	Lnstallation Pipe Diameter	/
Protection Grade	IP65	CRI	> 90
Operating Temperature	-30~50℃		

DM-SE29a

Standard colours

9004 9006 9007 9016

Bollard light

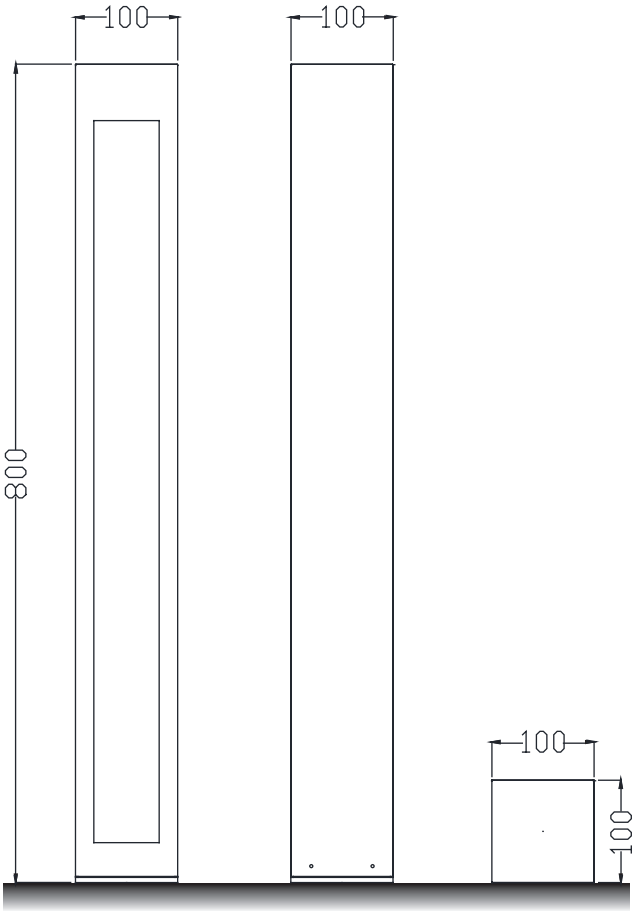

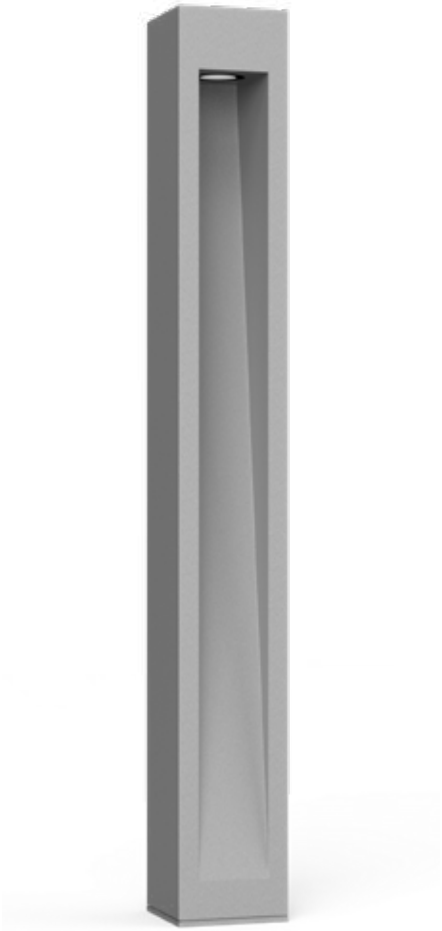

Installation plate

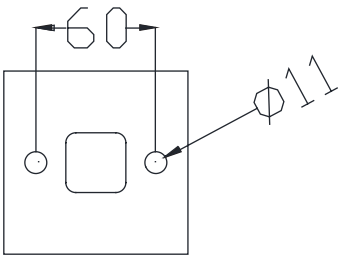

DM-SE30a

Colo(u)r temperature

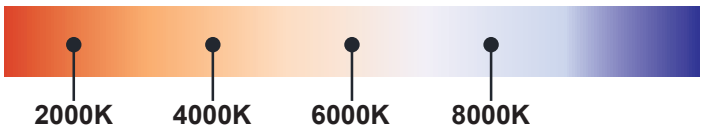

Bollard light

IP65

Rated power	12W	Power Factor	> 0.9
LED Quantity	1pcs	Life	> 50000H
Color Temperature	6000k/4000k/3000k	THD	< 15%
Luminous Flux	1100lm	Frequency Range	50/60HZ
Input Voltage	AC100~277V	Lnstallation Pipe Diameter	/
Protection Grade	IP65	CRI	> 90
Operating Temperature	-30~50℃		

DM-SE30a

Standard colours

9004 9006 9007 9016

Bollard light

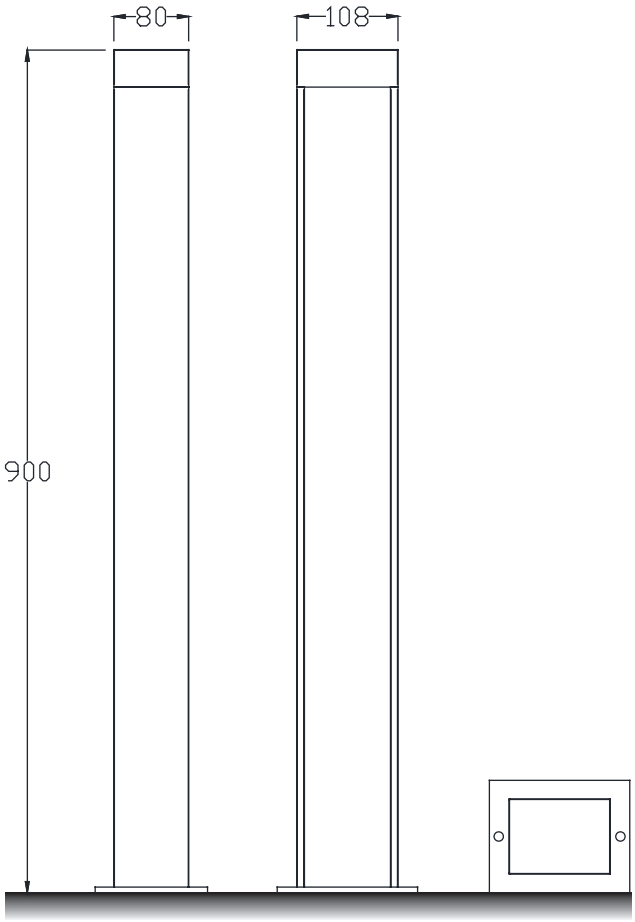

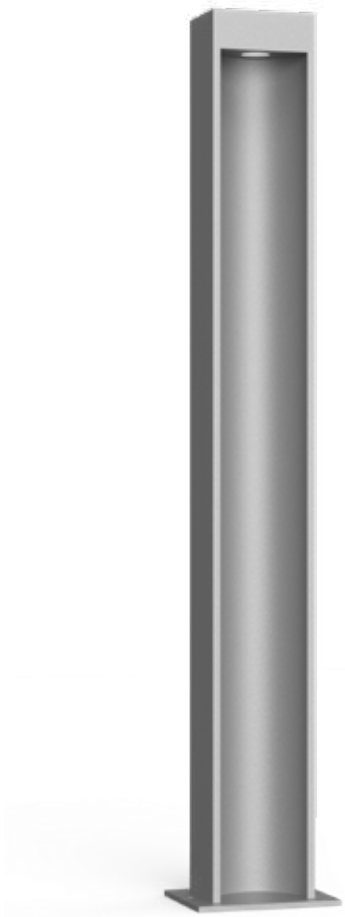

Installation plate

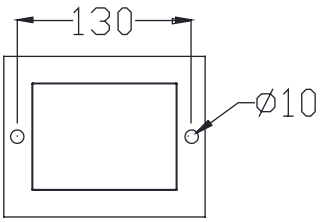

DM-SE31a

Colo(u)r temperature

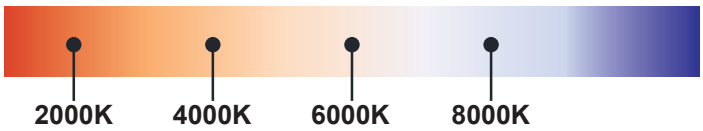

Bollard light

IP65

Rated power	12W	Power Factor	> 0.9
LED Quantity	1pcs	Life	> 50000H
Color Temperature	6000k/4000k/3000k	THD	< 15%
Luminous Flux	1100lm	Frequency Range	50/60HZ
Input Voltage	AC100~277V	Lnstallation Pipe Diameter	/
Protection Grade	IP65	CRI	> 90
Operating Temperature	-30~50℃		

DM-SE31a

Standard colours

9004 9006 9007 9016

Bollard light

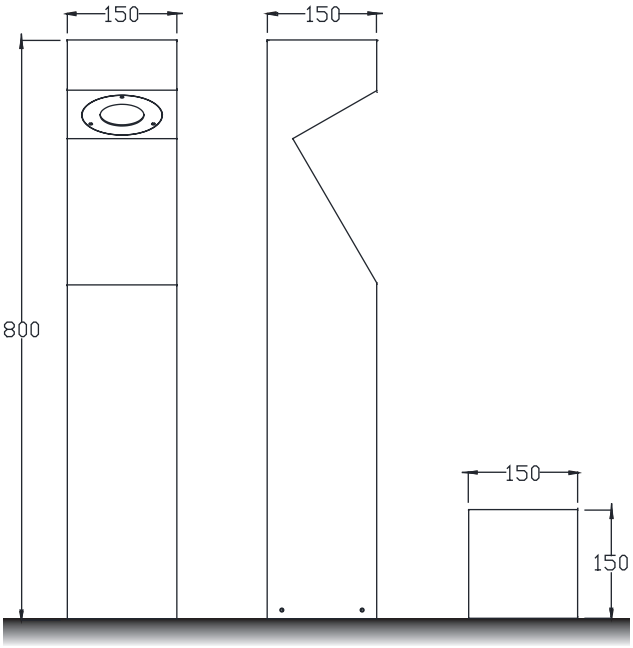

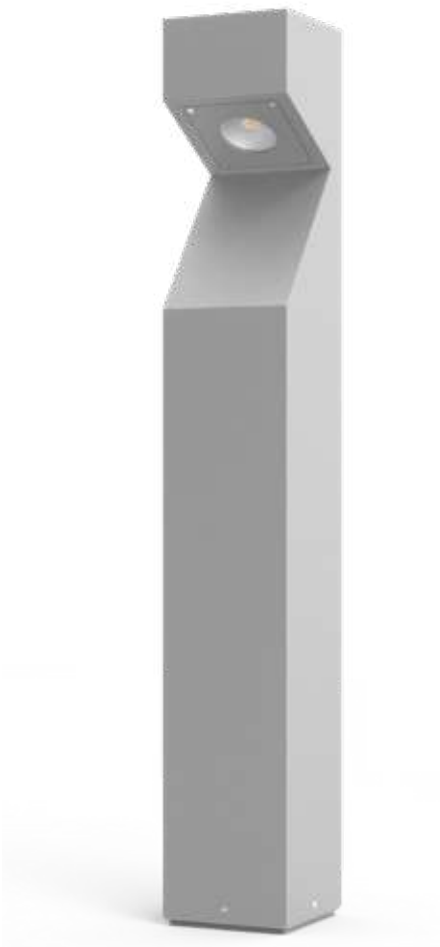

Installation plate

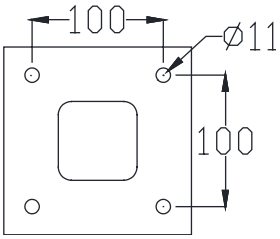

DM-SE32a

Colo(u)r temperature

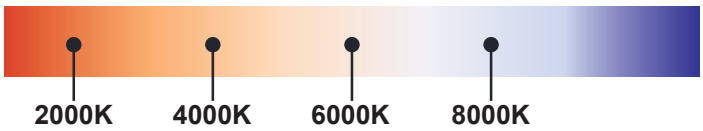

Bollard light

IP65

Rated power	12W	Power Factor	> 0.9
LED Quantity	1pcs	Life	> 50000H
Color Temperature	6000k/4000k/3000k	THD	< 15%
Luminous Flux	1100lm	Frequency Range	50/60HZ
Input Voltage	AC100~277V	Lnstallation Pipe Diameter	/
Protection Grade	IP65	CRI	> 90
Operating Temperature	-30~50℃		

DM-SE32a

Standard colours

9004 9006 9007 9016

Bollard light

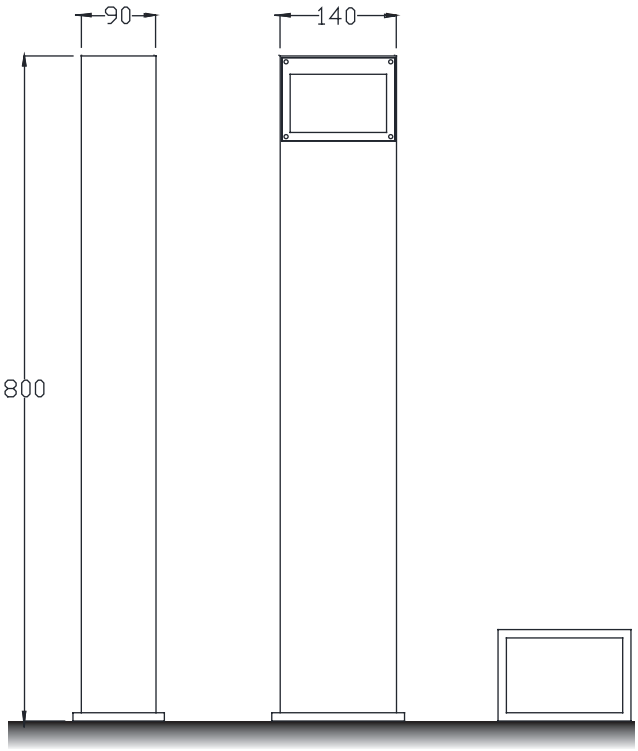

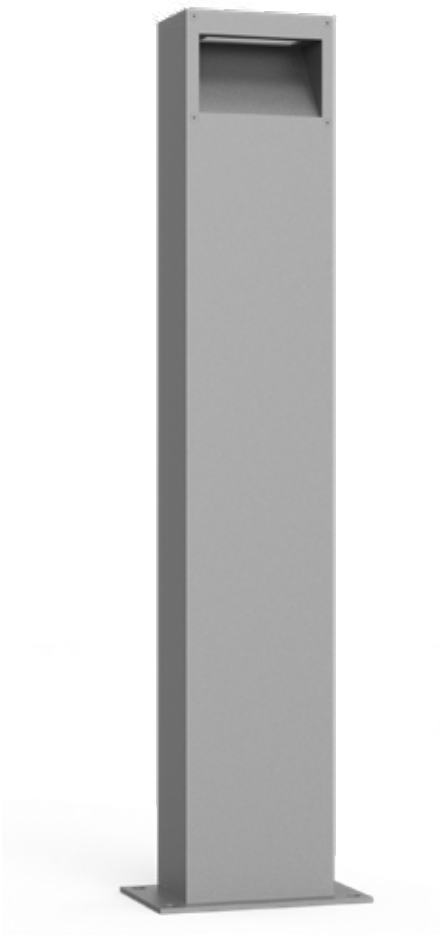

Installation plate

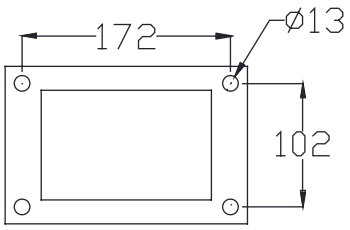

DM-SE33a

Colo(u)r temperature

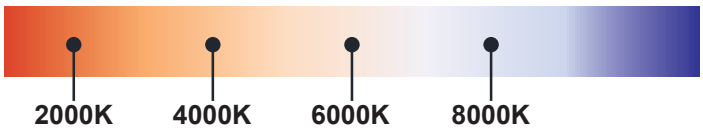

Bollard light

IP65

Rated power	12W	Power Factor	> 0.9
LED Quantity	1pcs	Life	> 50000H
Color Temperature	6000k/4000k/3000k	THD	< 15%
Luminous Flux	1100lm	Frequency Range	50/60HZ
Input Voltage	AC100~277V	Lnstallation Pipe Diameter	/
Protection Grade	IP65	CRI	> 90
Operating Temperature	-30~50℃		

DM-SE33a

Standard colours

9004 9006 9007 9016

Bollard light

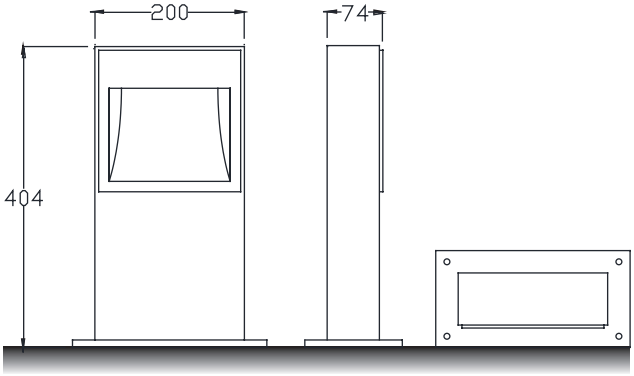

Installation plate

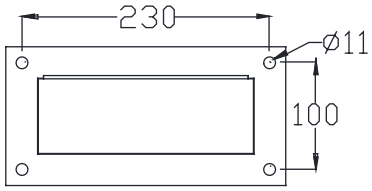

DM-SE34a

Colo(u)r temperature

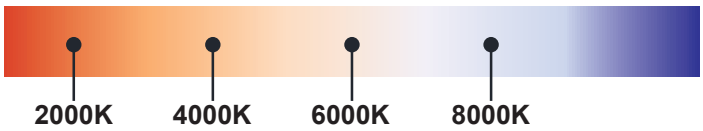

Bollard light

IP65

Rated power	12W	Power Factor	> 0.9
LED Quantity	1pcs	Life	> 50000H
Color Temperature	6000k/4000k/3000k	THD	< 15%
Luminous Flux	1100lm	Frequency Range	50/60HZ
Input Voltage	AC100~277V	Lnstallation Pipe Diameter	/
Protection Grade	IP65	CRI	> 90
Operating Temperature	-30~50℃		

DM-SE34a

Standard colours

9004 9006 9007 9016

Bollard light

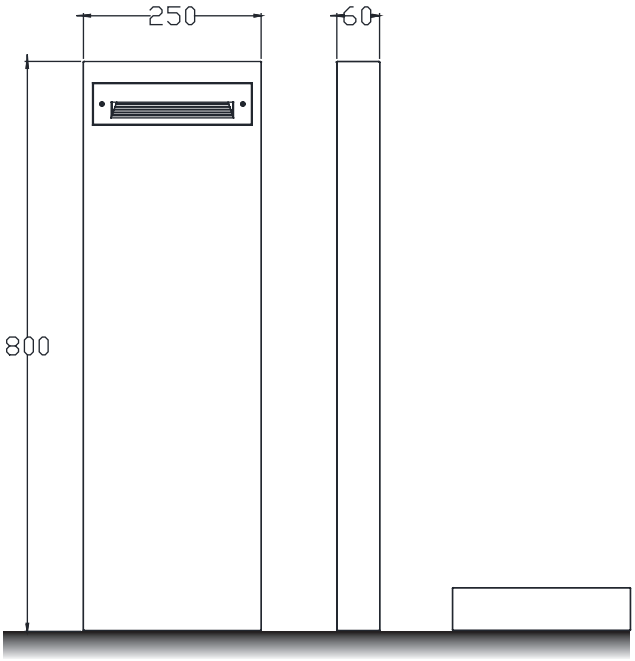

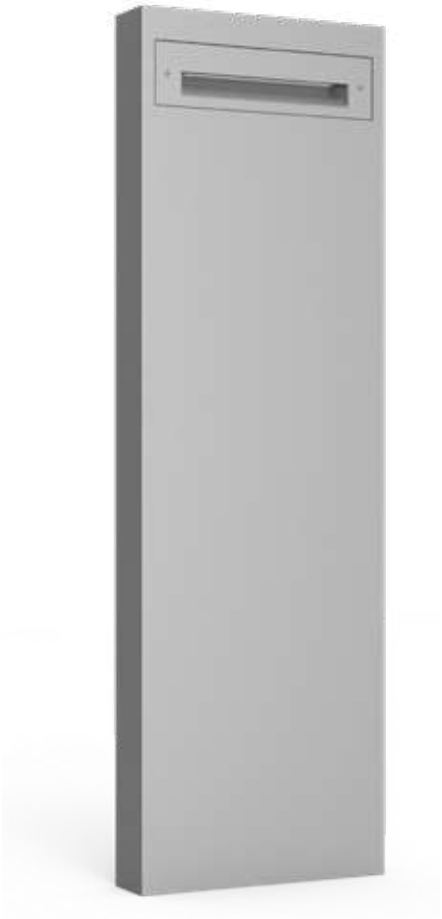

Installation plate

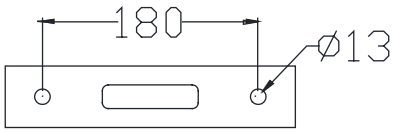

DM-SE35a

Colo(u)r temperature

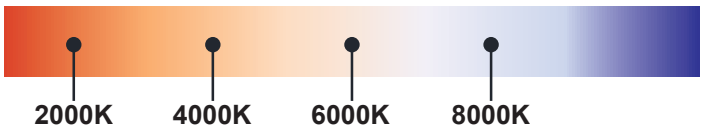

Bollard light

IP65

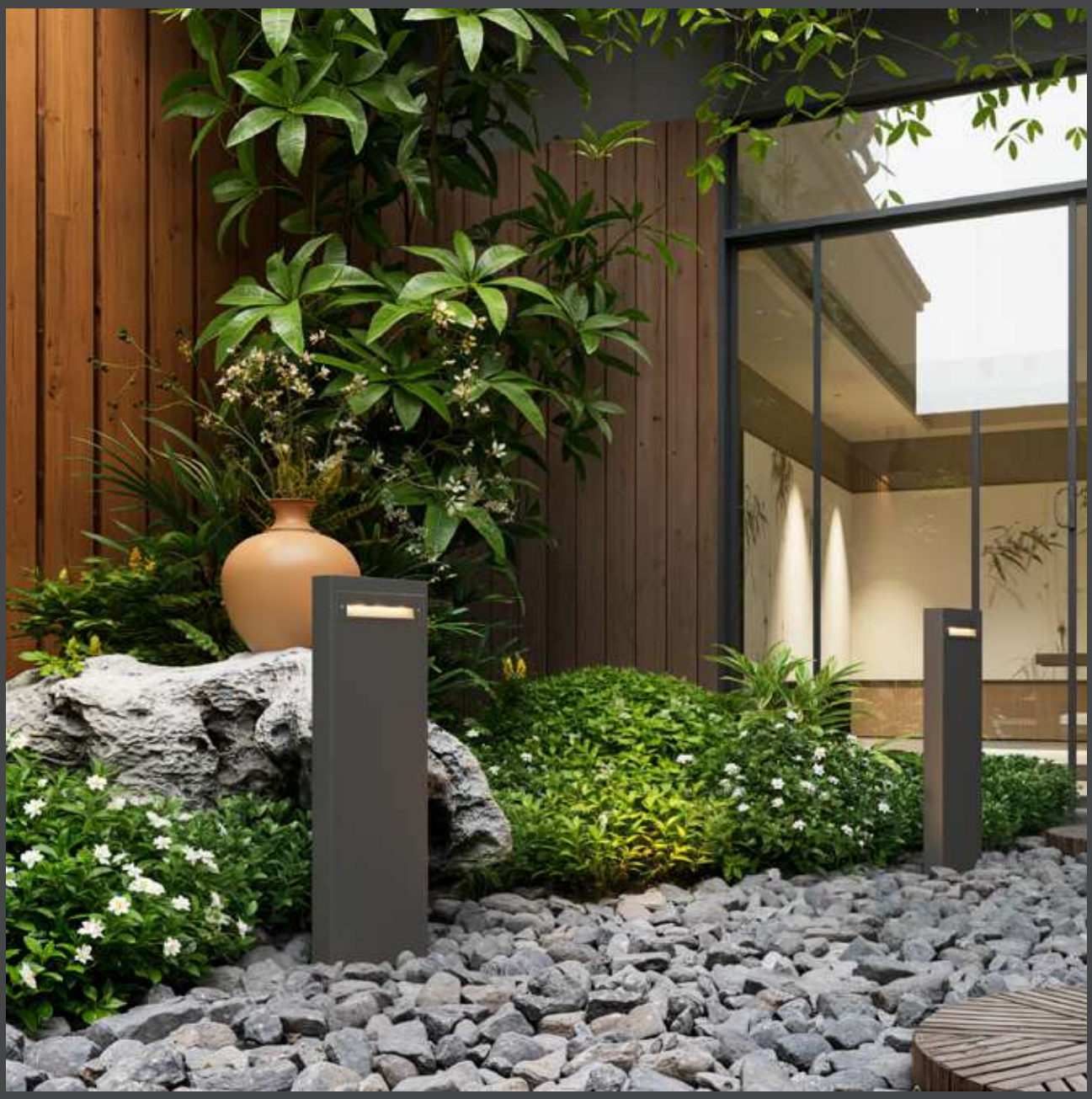

Rated power	12W	Power Factor	> 0.9
LED Quantity	1pcs	Life	> 50000H
Color Temperature	6000k/4000k/3000k	THD	< 15%
Luminous Flux	1100lm	Frequency Range	50/60HZ
Input Voltage	AC100~277V	Lnstallation Pipe Diameter	/
Protection Grade	IP65	CRI	> 90
Operating Temperature	-30~50℃		

DM-SE35a

Standard colours

9004 9006 9007 9016

Bollard light

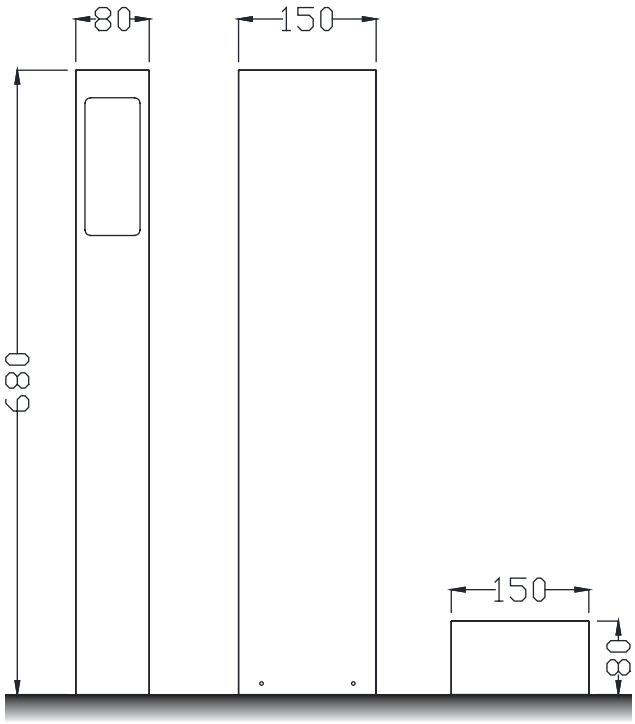

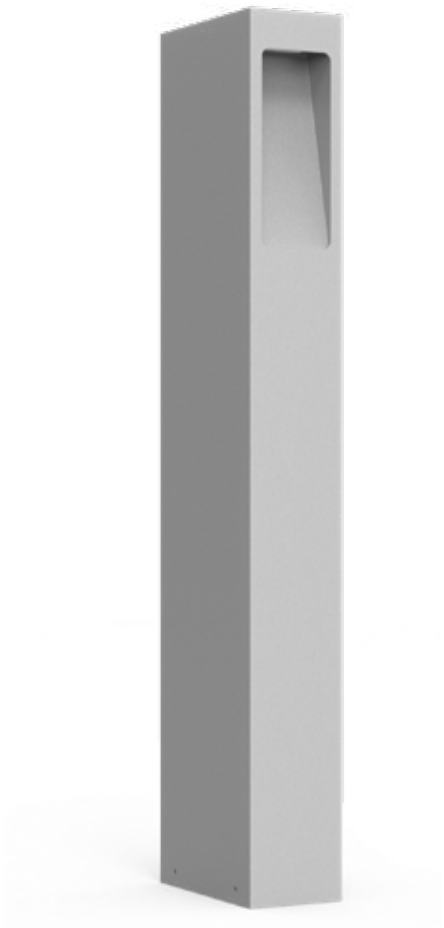

Installation plate

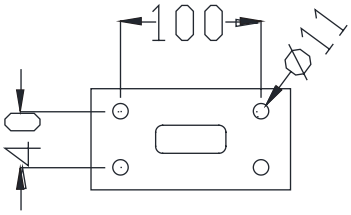

DM-SE36a

Colo(u)r temperature

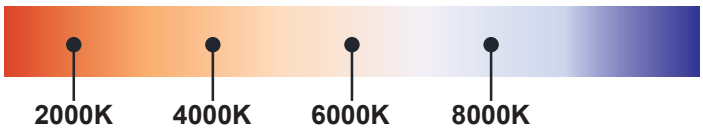

Bollard light

IP65

Rated power	12W	Power Factor	> 0.9
LED Quantity	1pcs	Life	> 50000H
Color Temperature	6000k/4000k/3000k	THD	< 15%
Luminous Flux	1100lm	Frequency Range	50/60HZ
Input Voltage	AC100~277V	Lnstallation Pipe Diameter	/
Protection Grade	IP65	CRI	> 90
Operating Temperature	-30~50℃		

DM-SE36a

Standard colours

9004 9006 9007 9016

Bollard light

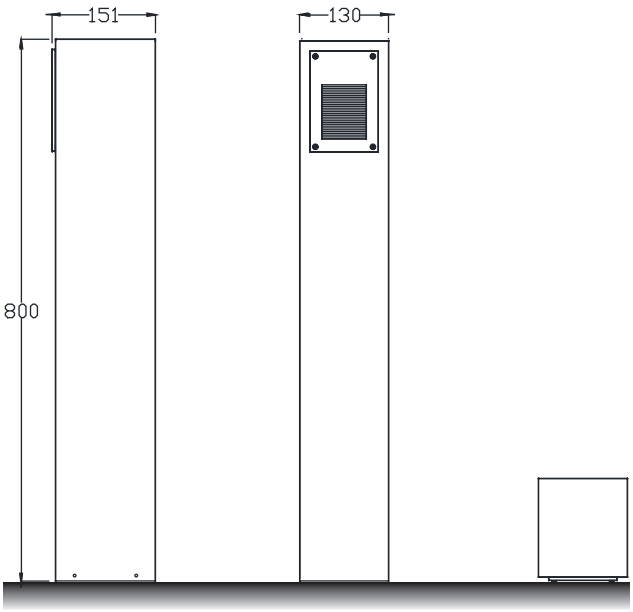

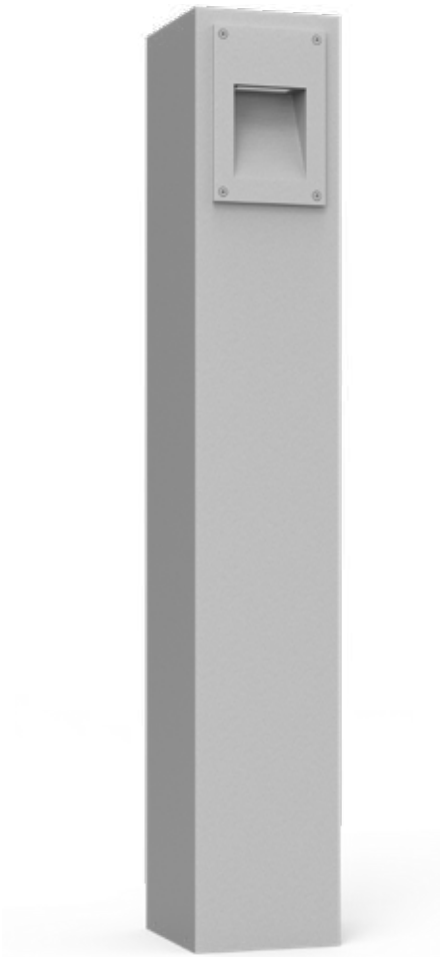

Installation plate

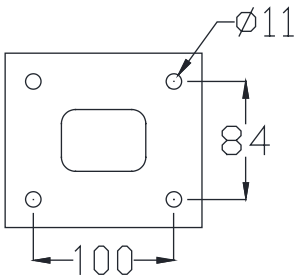

DM-SE37a

Colo(u)r temperature

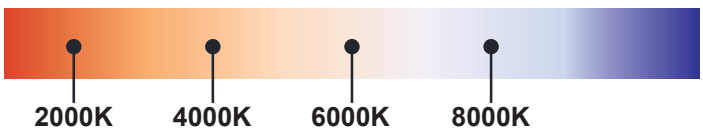

Bollard light

IP65

Rated power	12W	Power Factor	> 0.9
LED Quantity	1pcs	Life	> 50000H
Color Temperature	6000k/4000k/3000k	THD	< 15%
Luminous Flux	1100lm	Frequency Range	50/60HZ
Input Voltage	AC100~277V	Lnstallation Pipe Diameter	/
Protection Grade	IP65	CRI	> 90
Operating Temperature	-30~50℃		

DM-SE37a

Standard colours

9004 9006 9007 9016

Bollard light

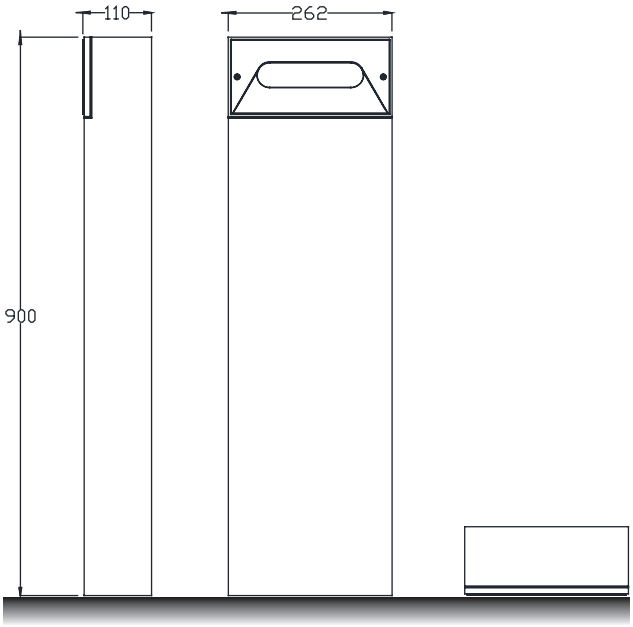

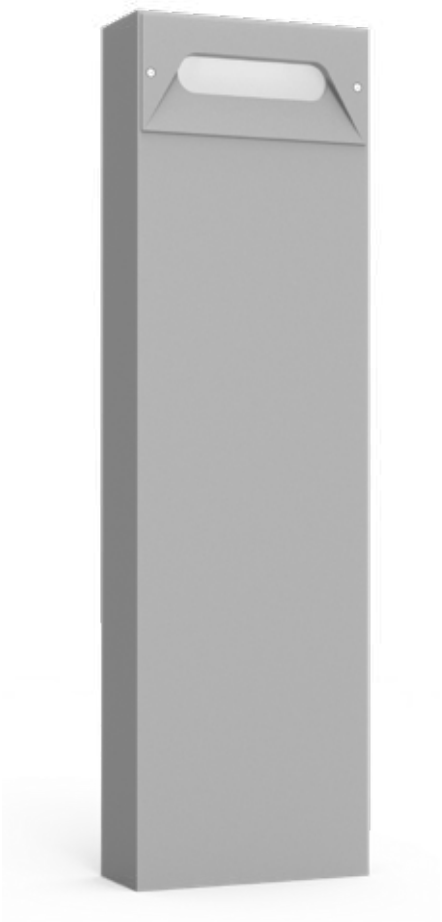

Installation plate

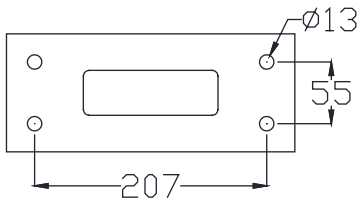

DM-SE38a

Colo(u)r temperature

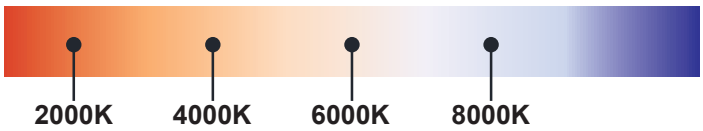

Bollard light

IP65

Rated power	12W	Power Factor	> 0.9
LED Quantity	1pcs	Life	> 50000H
Color Temperature	6000k/4000k/3000k	THD	< 15%
Luminous Flux	1100lm	Frequency Range	50/60HZ
Input Voltage	AC100~277V	Lnstallation Pipe Diameter	/
Protection Grade	IP65	CRI	> 90
Operating Temperature	-30~50℃		

DM-SE38a

Standard colours

9004 9006 9007 9016

Bollard light

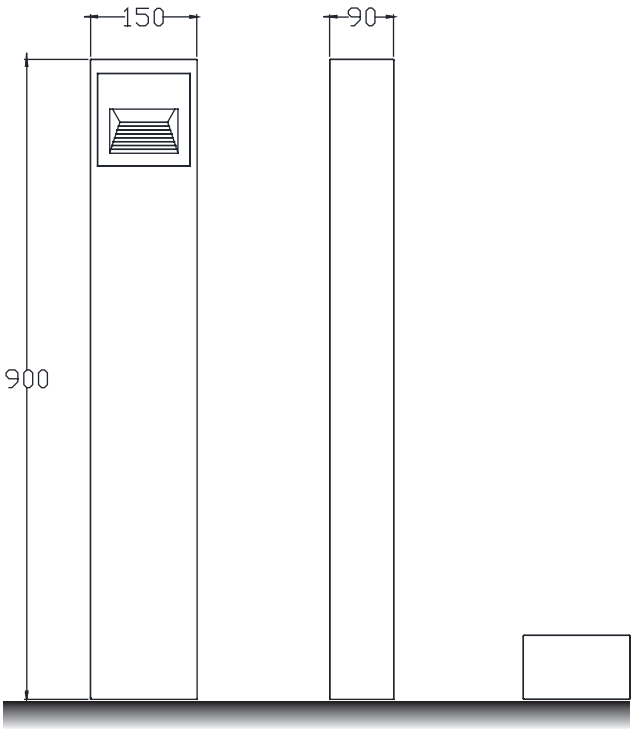

Installation plate

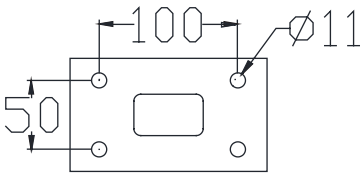

DM-SE39a

Colo(u)r temperature

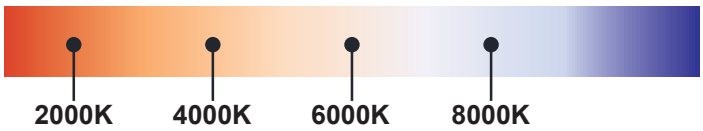

Bollard light

IP65

Rated power	12W	Power Factor	> 0.9
LED Quantity	1pcs	Life	> 50000H
Color Temperature	6000k/4000k/3000k	THD	< 15%
Luminous Flux	1100lm	Frequency Range	50/60HZ
Input Voltage	AC100~277V	Lnstallation Pipe Diameter	/
Protection Grade	IP65	CRI	> 90
Operating Temperature	-30~50℃		

DM-SE39a

Standard colours

9004 9006 9007 9016

Bollard light

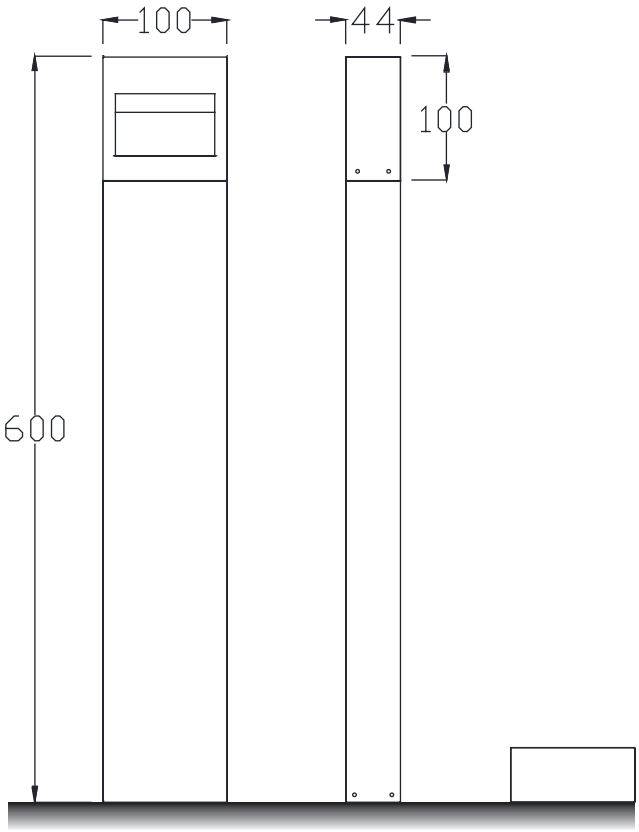

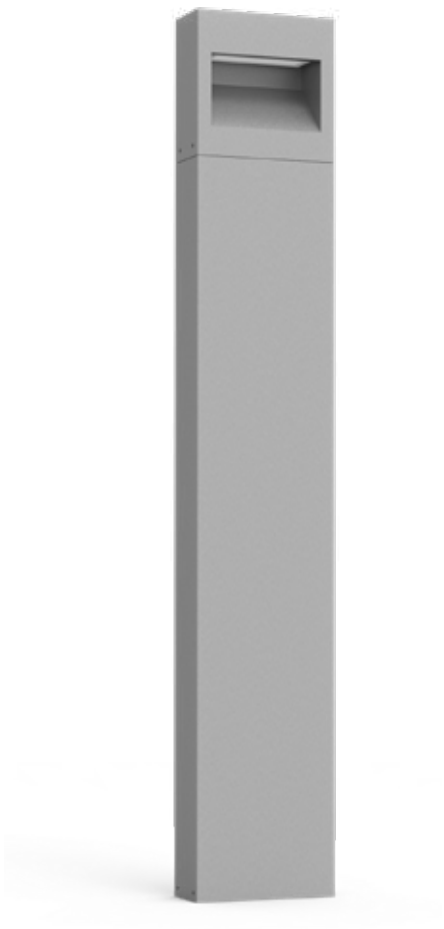

Installation plate

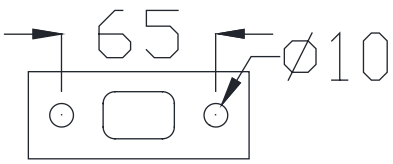

DM-SE40a

Colo(u)r temperature

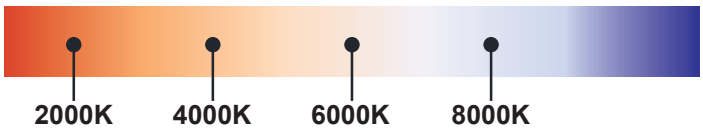

Bollard light

IP65

Rated power	12W	Power Factor	> 0.9
LED Quantity	1pcs	Life	> 50000H
Color Temperature	6000k/4000k/3000k	THD	< 15%
Luminous Flux	1100lm	Frequency Range	50/60HZ
Input Voltage	AC100~277V	Lnstallation Pipe Diameter	/
Protection Grade	IP65	CRI	> 90
Operating Temperature	-30~50℃		

DM-SE40a

Standard colours

9004 9006 9007 9016

Bollard light

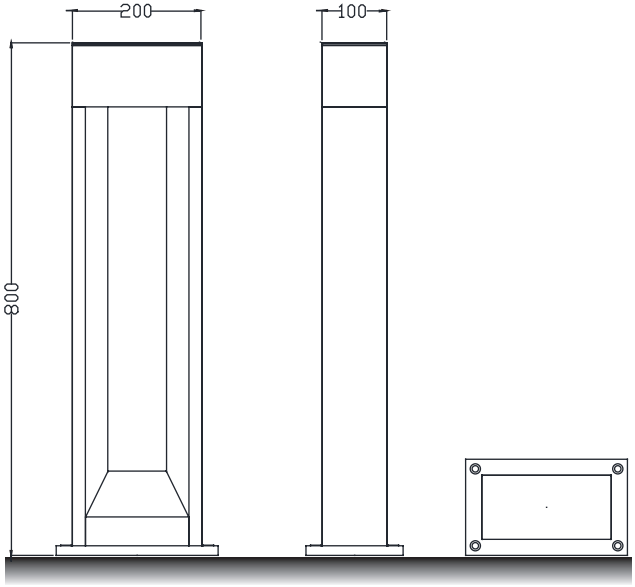

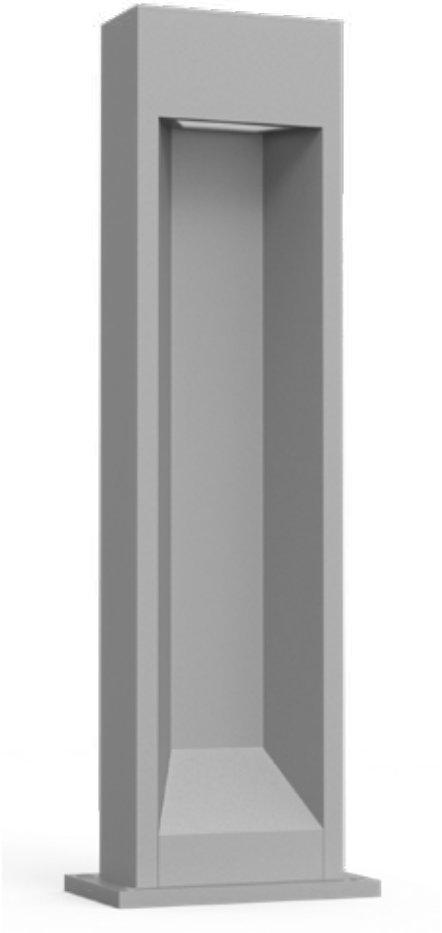

Installation plate

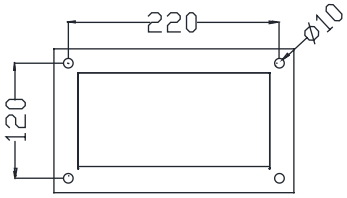

DM-SE41a

Colo(u)r temperature

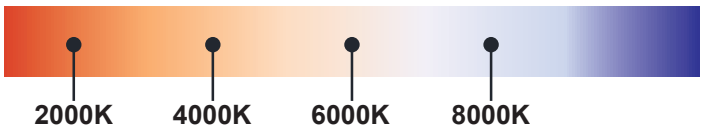

Bollard light

IP65

Rated power	12W	Power Factor	> 0.9
LED Quantity	1pcs	Life	> 50000H
Color Temperature	6000k/4000k/3000k	THD	< 15%
Luminous Flux	1100lm	Frequency Range	50/60HZ
Input Voltage	AC100~277V	Lnstallation Pipe Diameter	/
Protection Grade	IP65	CRI	> 90
Operating Temperature	-30~50℃		

DM-SE41a

Standard colours

9004 9006 9007 9016

Bollard light

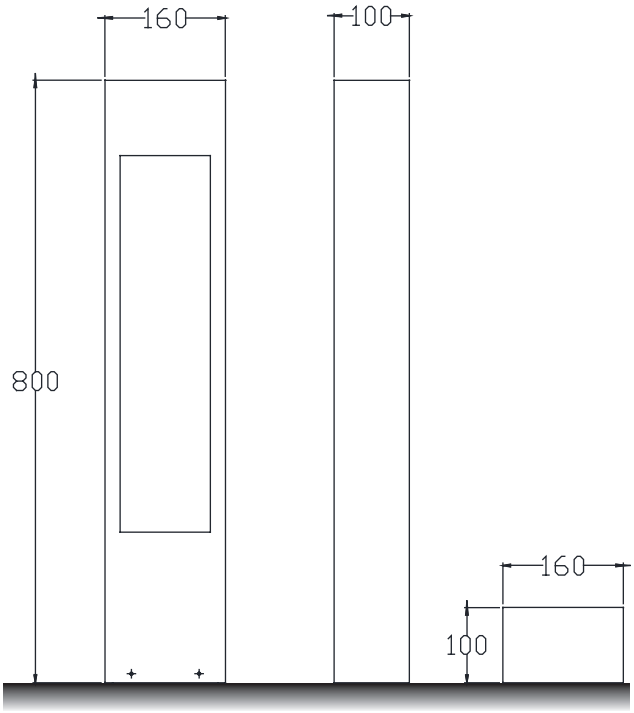

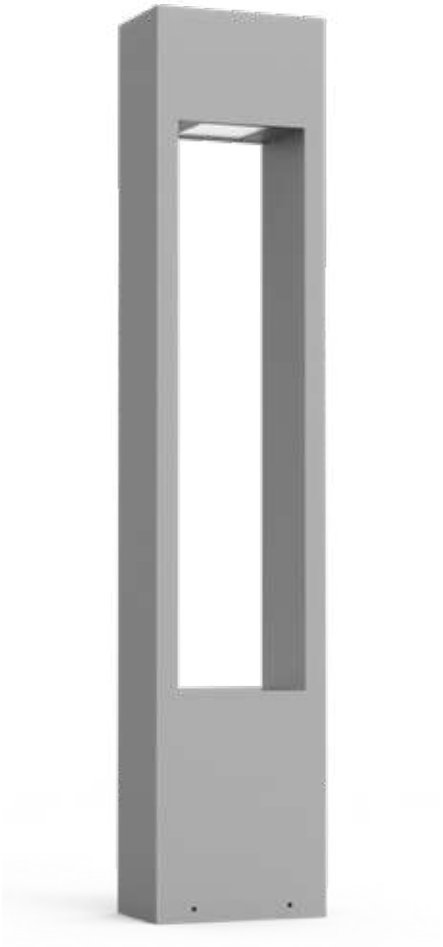

Installation plate

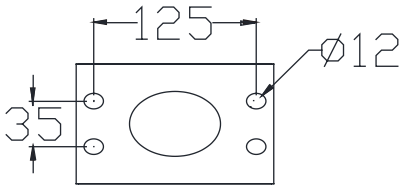

DM-SE42a

Colo(u)r temperature

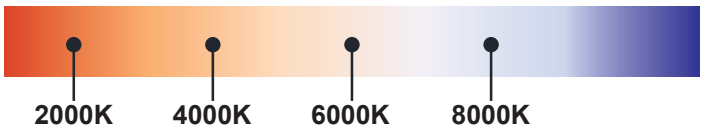

Bollard light

IP65

Rated power	12W	Power Factor	> 0.9
LED Quantity	1pcs	Life	> 50000H
Color Temperature	6000k/4000k/3000k	THD	< 15%
Luminous Flux	1100lm	Frequency Range	50/60HZ
Input Voltage	AC100~277V	Lnstallation Pipe Diameter	/
Protection Grade	IP65	CRI	> 90
Operating Temperature	-30~50℃		

DM-SE42a

Standard colours

9004 9006 9007 9016

Bollard light

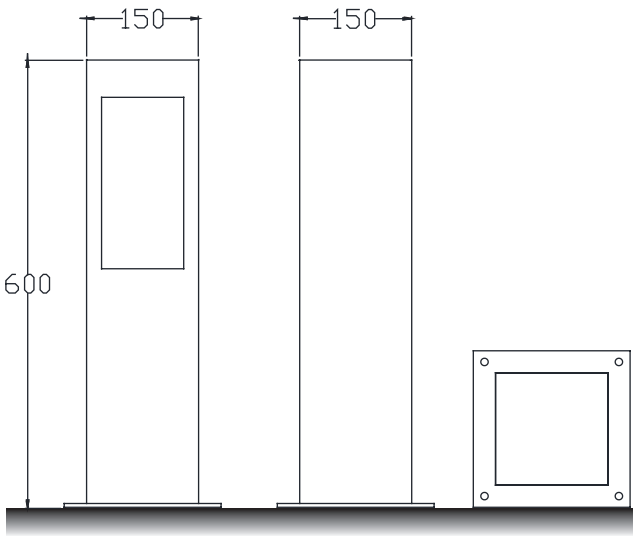

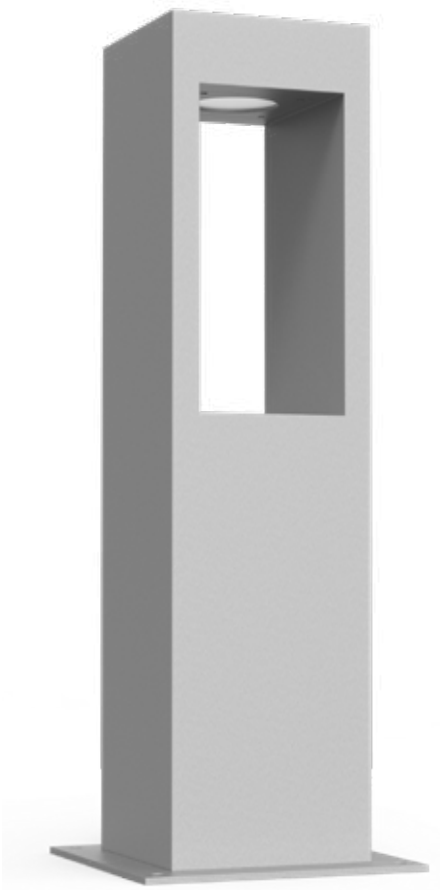

Installation plate

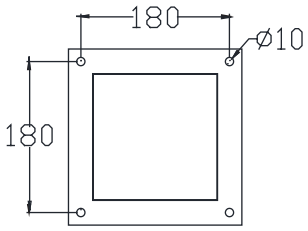

DM-SE43a

Colo(u)r temperature

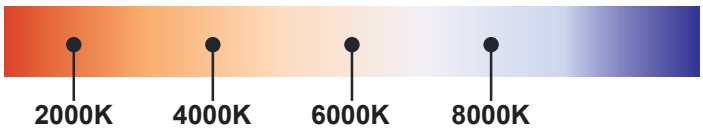

Bollard light

IP65

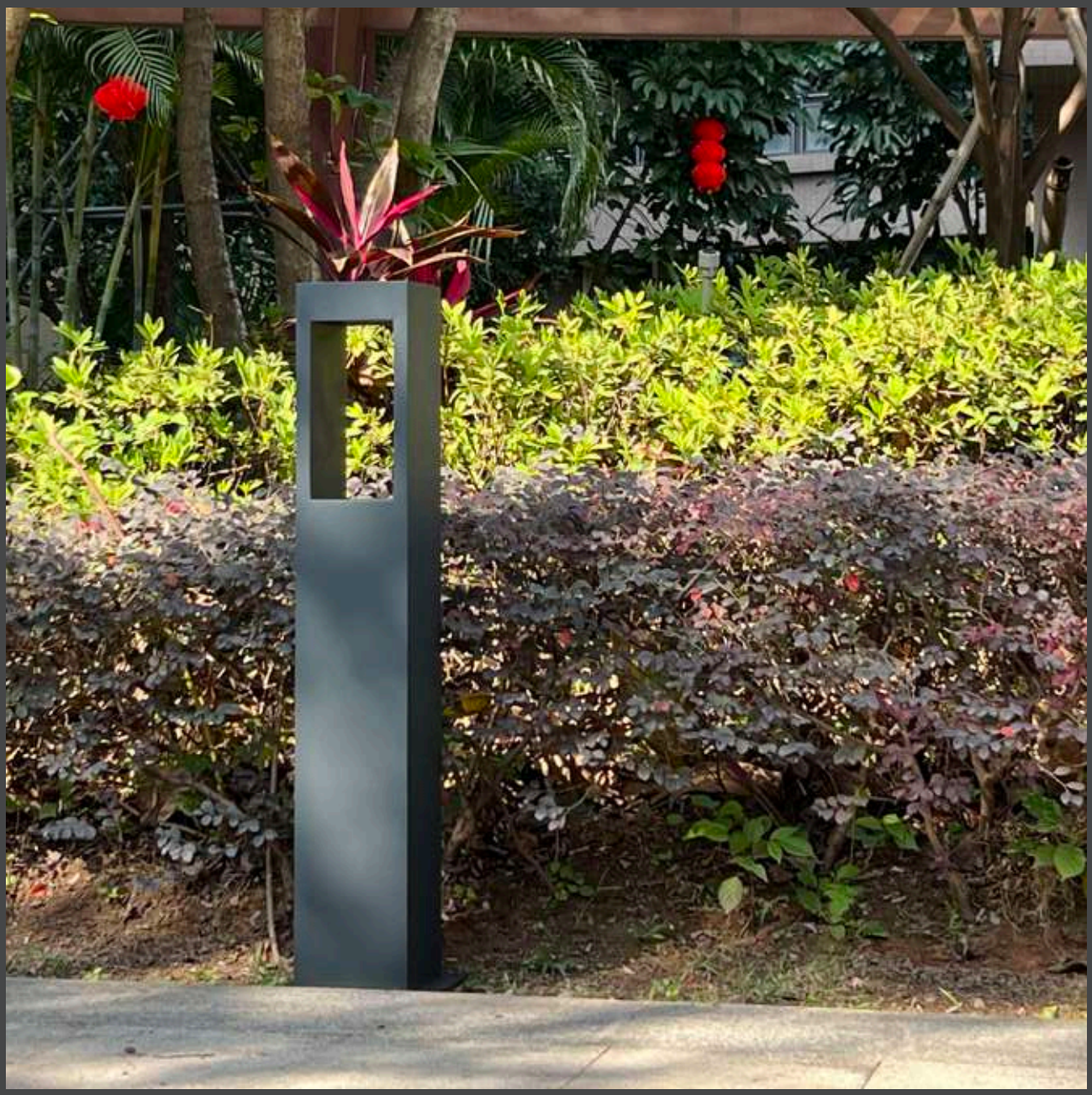

Rated power	12W	Power Factor	> 0.9
LED Quantity	1pcs	Life	> 50000H
Color Temperature	6000k/4000k/3000k	THD	< 15%
Luminous Flux	1100lm	Frequency Range	50/60HZ
Input Voltage	AC100~277V	Lnstallation Pipe Diameter	/
Protection Grade	IP65	CRI	> 90
Operating Temperature	-30~50℃		

DM-SE43a

Standard colours

9004 9006 9007 9016

Bollard light

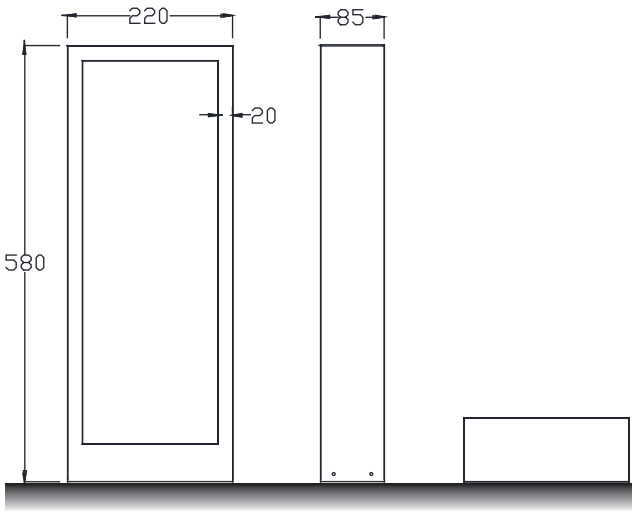

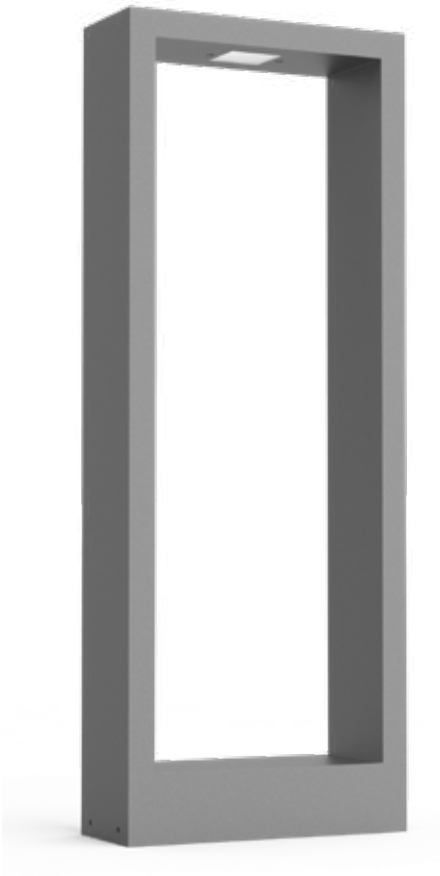

Installation plate

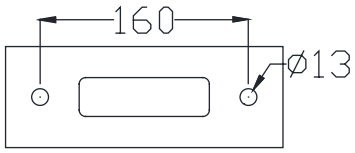

DM-SE44a

Colo(u)r temperature

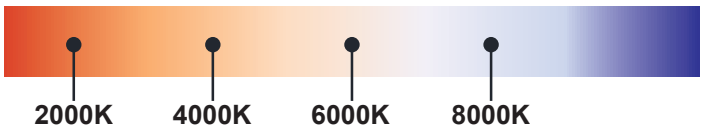

Bollard light

IP65

Rated power	12W	Power Factor	> 0.9
LED Quantity	1pcs	Life	> 50000H
Color Temperature	6000k/4000k/3000k	THD	< 15%
Luminous Flux	1100lm	Frequency Range	50/60HZ
Input Voltage	AC100~277V	Lnstallation Pipe Diameter	/
Protection Grade	IP65	CRI	> 90
Operating Temperature	-30~50℃		

DM-SE44a

Standard colours

9004 9006 9007 9016

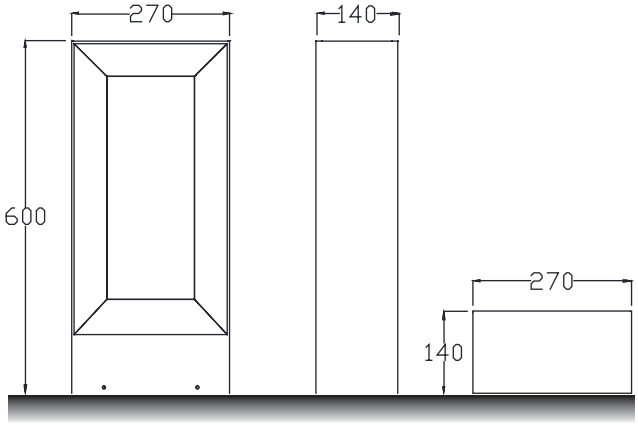

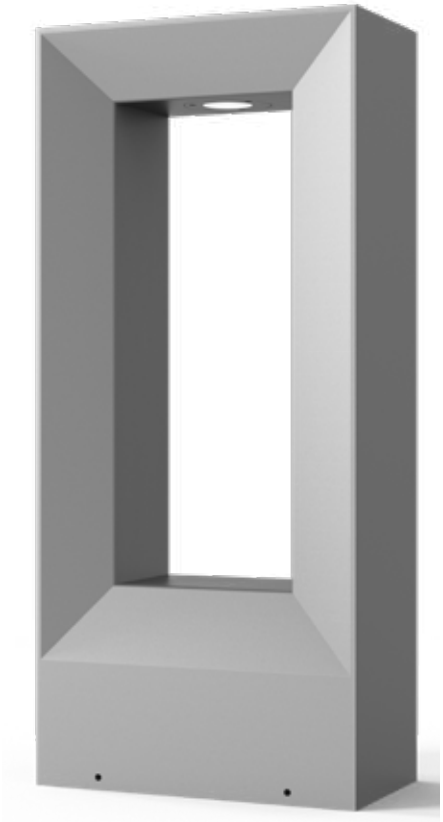

Installation plate

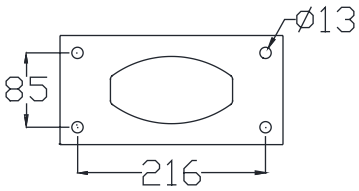

DM-SE45a

Colo(u)r temperature

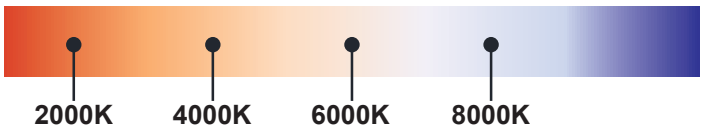

Bollard light

IP65

Rated power	12W	Power Factor	> 0.9
LED Quantity	1pcs	Life	> 50000H
Color Temperature	6000k/4000k/3000k	THD	< 15%
Luminous Flux	1100lm	Frequency Range	50/60HZ
Input Voltage	AC100~277V	Lnstallation Pipe Diameter	/
Protection Grade	IP65	CRI	> 90
Operating Temperature	-30~50℃		

DM-SE45a

Standard colours

9004 9006 9007 9016

Bollard light

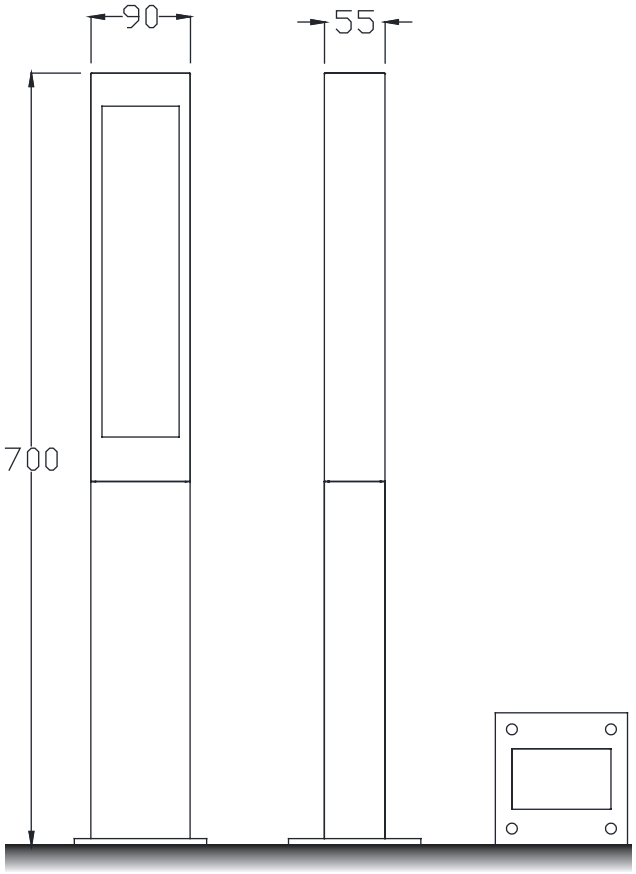

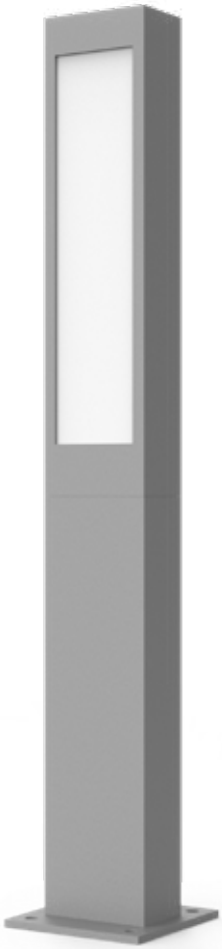

Installation plate

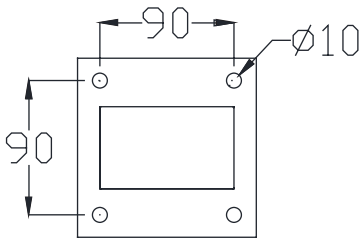

DM-SE46a

Colo(u)r temperature

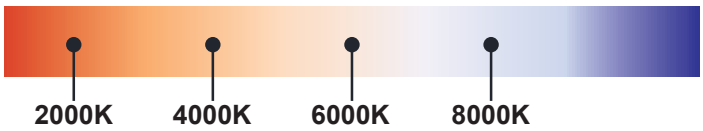

Bollard light

IP65

Rated power	12W	Power Factor	> 0.9
LED Quantity	1pcs	Life	> 50000H
Color Temperature	6000k/4000k/3000k	THD	< 15%
Luminous Flux	1100lm	Frequency Range	50/60HZ
Input Voltage	AC100~277V	Lnstallation Pipe Diameter	/
Protection Grade	IP65	CRI	> 90
Operating Temperature	-30~50℃		

DM-SE46a

Standard colours

9004 9006 9007 9016

Bollard light

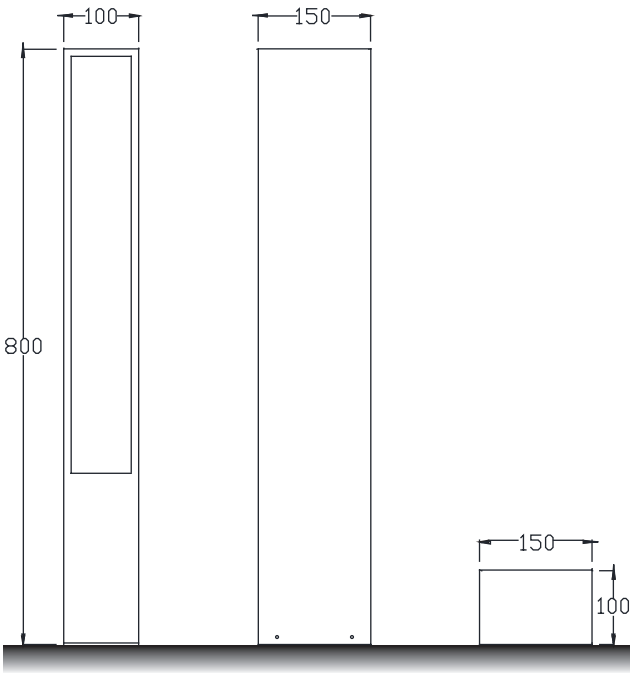

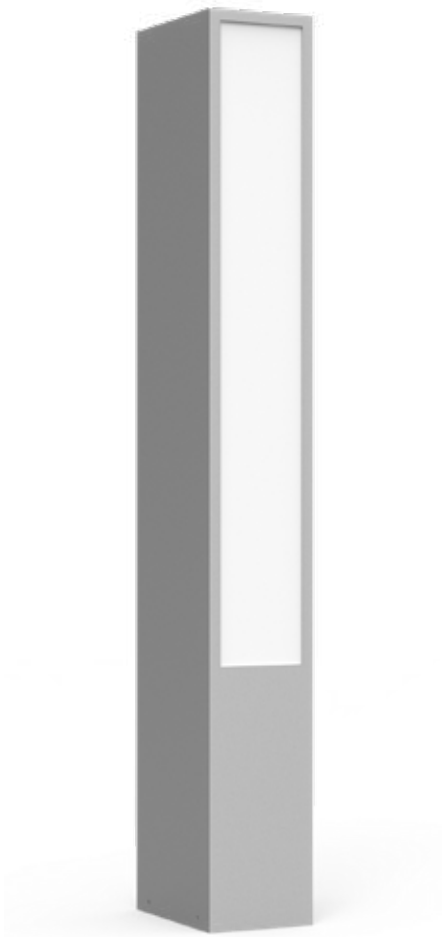

Installation plate

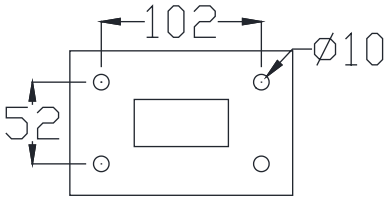

DM-SE47a

Colo(u)r temperature

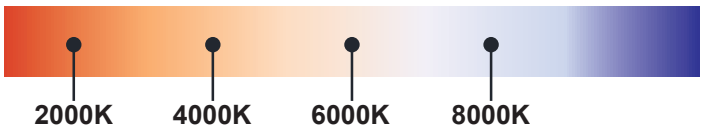

Bollard light

IP65

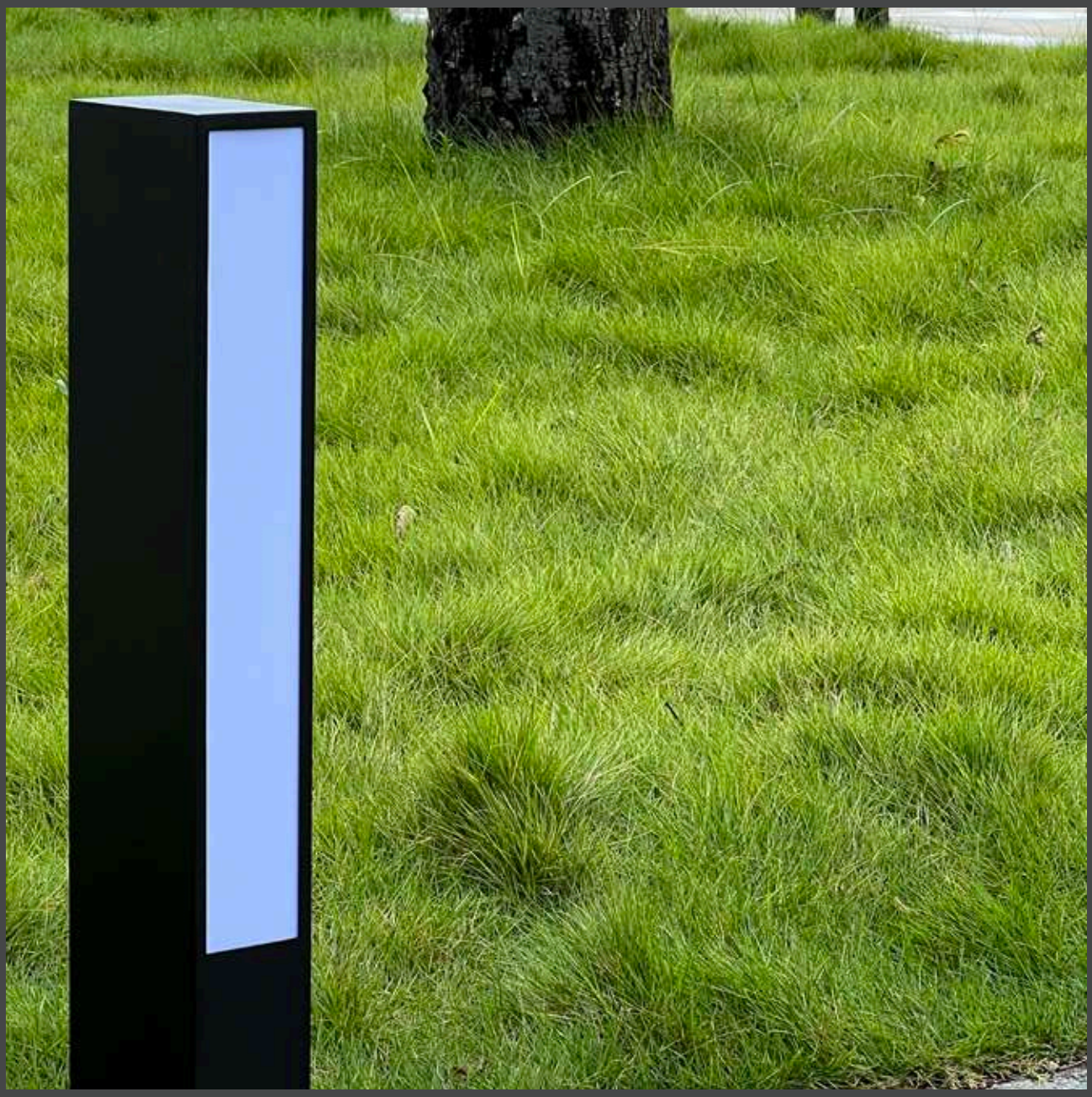

Rated power	12W	Power Factor	> 0.9
LED Quantity	1pcs	Life	> 50000H
Color Temperature	6000k/4000k/3000k	THD	< 15%
Luminous Flux	1100lm	Frequency Range	50/60HZ
Input Voltage	AC100~277V	Lnstallation Pipe Diameter	/
Protection Grade	IP65	CRI	> 90
Operating Temperature	-30~50℃		

DM-SE47a

Standard colours

9004 9006 9007 9016

Bollard light

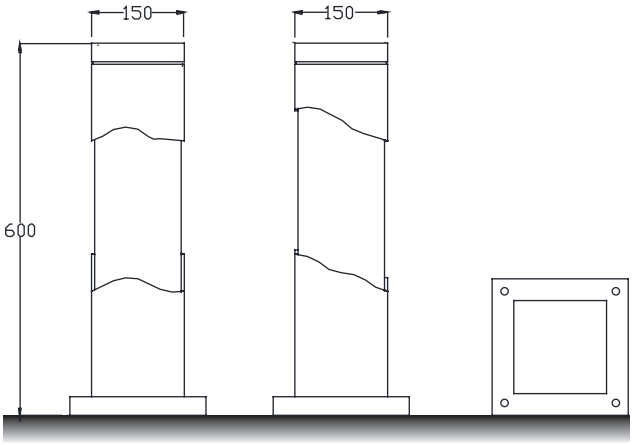

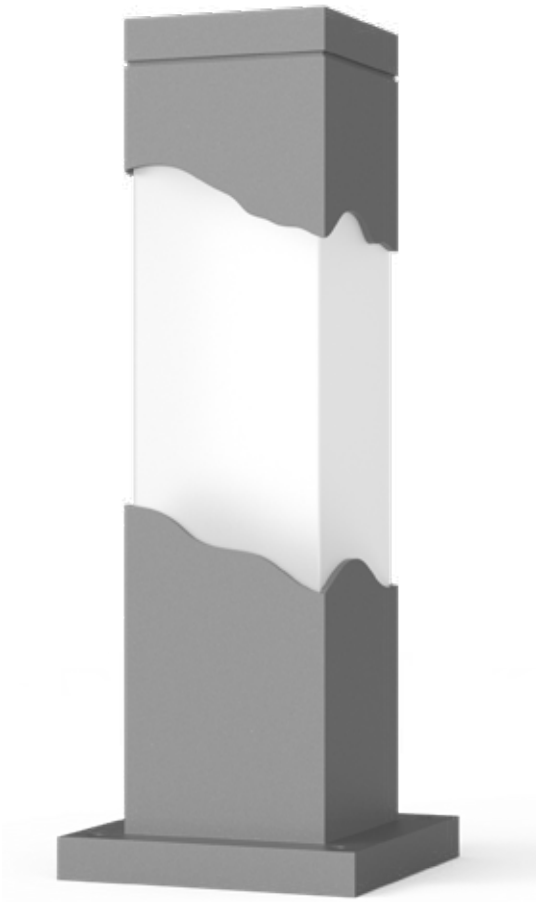

Installation plate

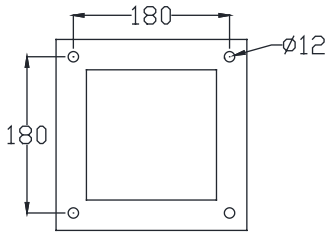

DM-SE48a

Colo(u)r temperature

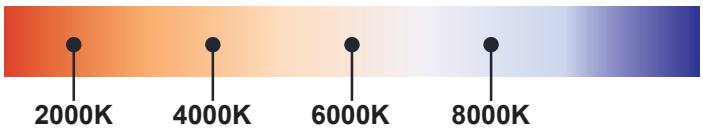

Bollard light

IP65

Rated power	12W	Power Factor	> 0.9
LED Quantity	1pcs	Life	> 50000H
Color Temperature	6000k/4000k/3000k	THD	< 15%
Luminous Flux	1100lm	Frequency Range	50/60HZ
Input Voltage	AC100~277V	Lnstallation Pipe Diameter	/
Protection Grade	IP65	CRI	> 90
Operating Temperature	-30~50℃		

DM-SE48a

Standard colours

9004 9006 9007 9016

Bollard light

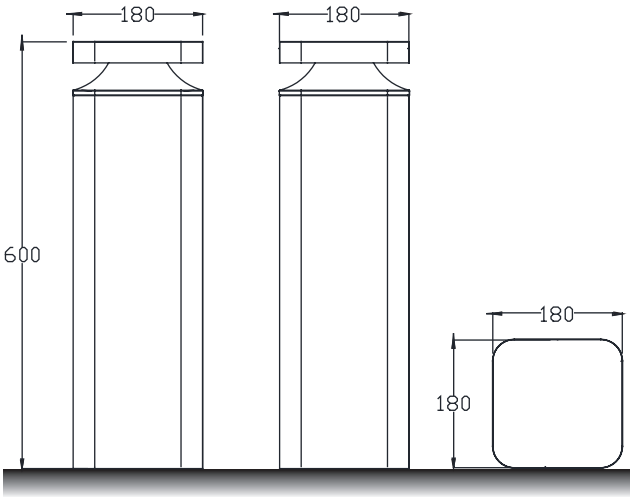

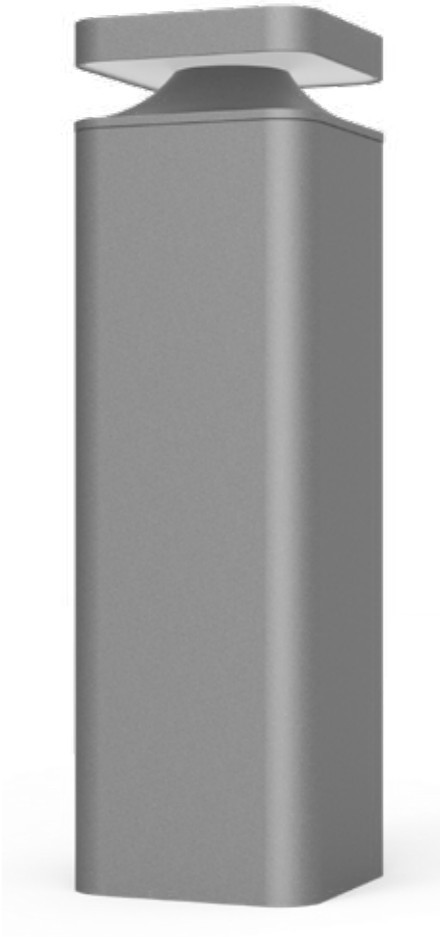

Installation plate

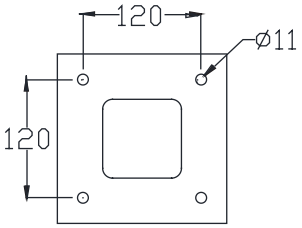

DM-SE49a

Colo(u)r temperature

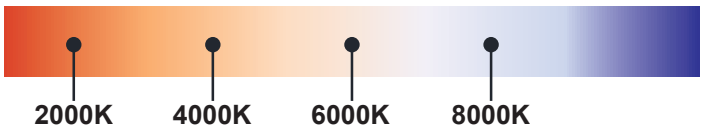

Bollard light

IP65

Rated power	12W	Power Factor	> 0.9
LED Quantity	1pcs	Life	> 50000H
Color Temperature	6000k/4000k/3000k	THD	< 15%
Luminous Flux	1100lm	Frequency Range	50/60HZ
Input Voltage	AC100~277V	Lnstallation Pipe Diameter	/
Protection Grade	IP65	CRI	> 90
Operating Temperature	-30~50℃		

DM-SE49a

Standard colours

9004 9006 9007 9016

Bollard light

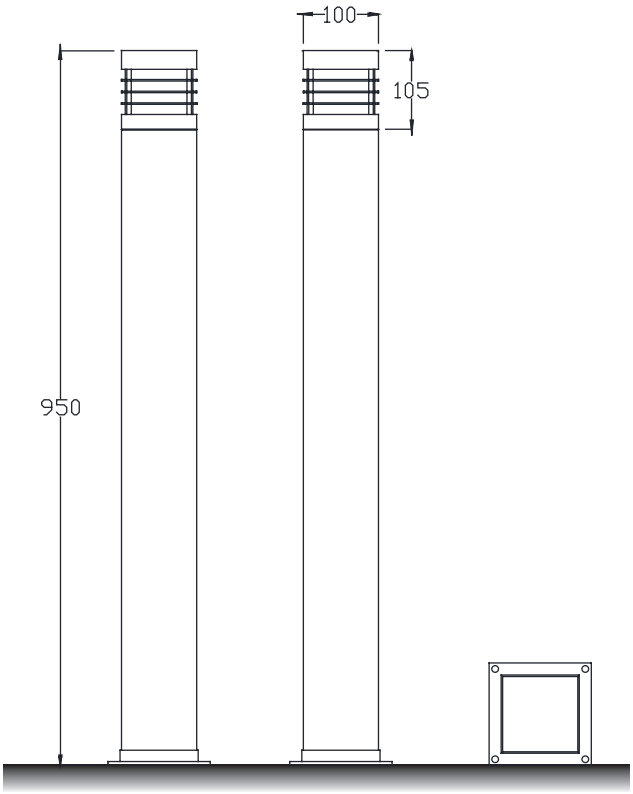

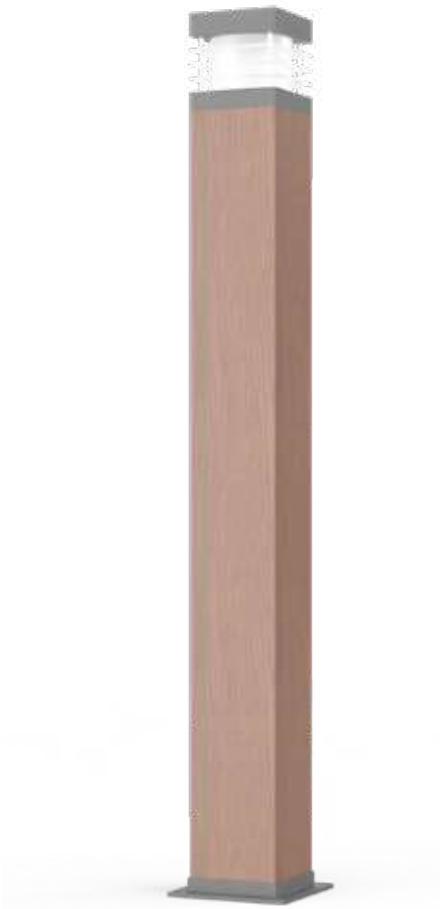

Installation plate

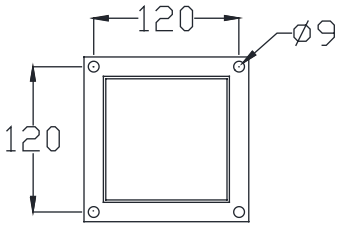

DM-SE50a

Colo(u)r temperature

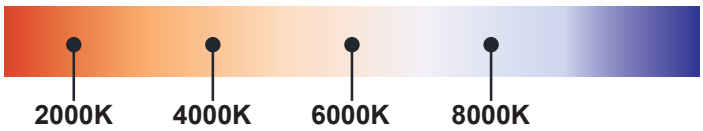

Bollard light

IP65

Rated power	12W	Power Factor	> 0.9
LED Quantity	1pcs	Life	> 50000H
Color Temperature	6000k/4000k/3000k	THD	< 15%
Luminous Flux	1100lm	Frequency Range	50/60HZ
Input Voltage	AC100~277V	Lnstallation Pipe Diameter	/
Protection Grade	IP65	CRI	> 90
Operating Temperature	-30~50℃		

DM-SE50a

Standard colours

9004 9006 9007 9016

Bollard light

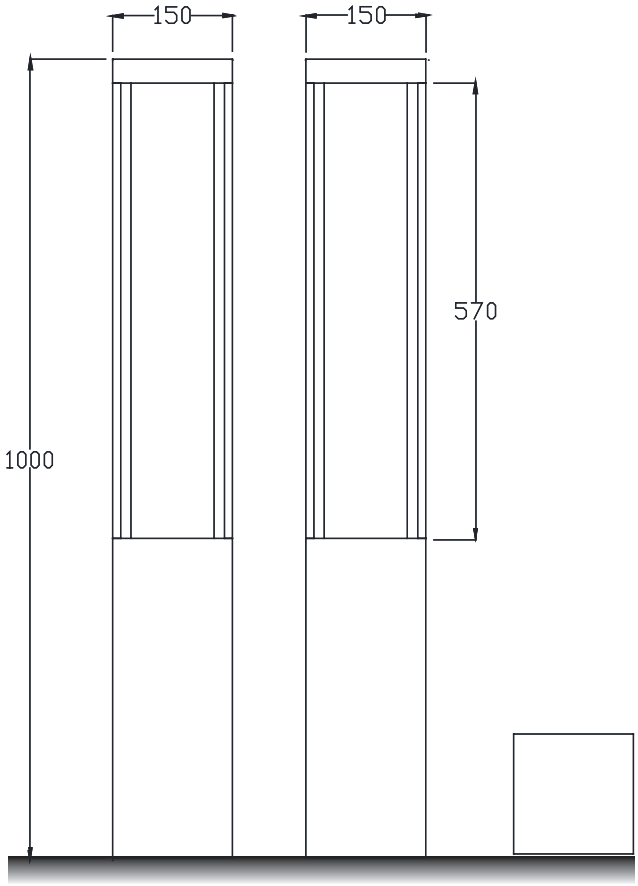

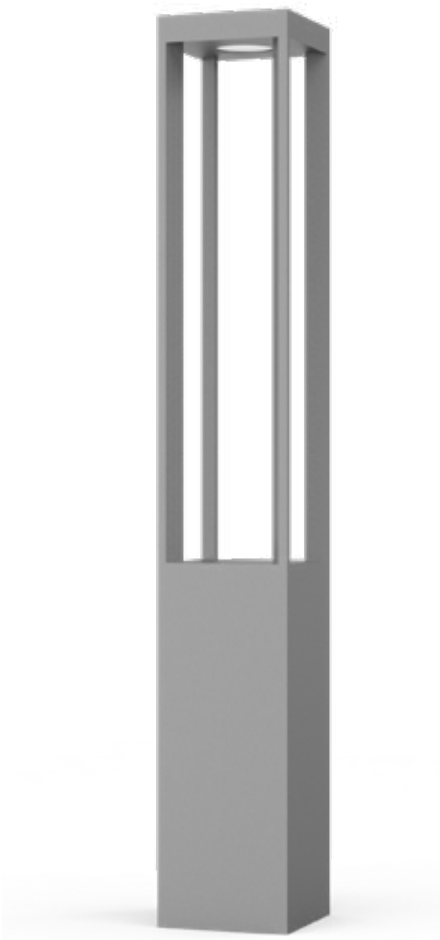

Installation plate

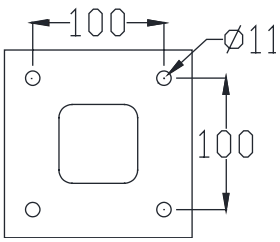

DM-SE51a

Colo(u)r temperature

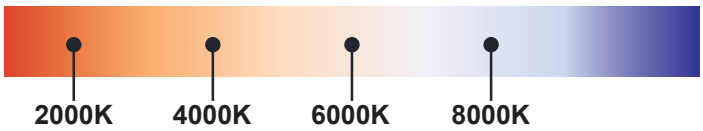

Bollard light

IP65

Rated power	12W	Power Factor	> 0.9
LED Quantity	1pcs	Life	> 50000H
Color Temperature	6000k/4000k/3000k	THD	< 15%
Luminous Flux	1100lm	Frequency Range	50/60HZ
Input Voltage	AC100~277V	Lnstallation Pipe Diameter	/
Protection Grade	IP65	CRI	> 90
Operating Temperature	-30~50℃		

DM-SE51a

Standard colours

9004 9006 9007 9016

Bollard light

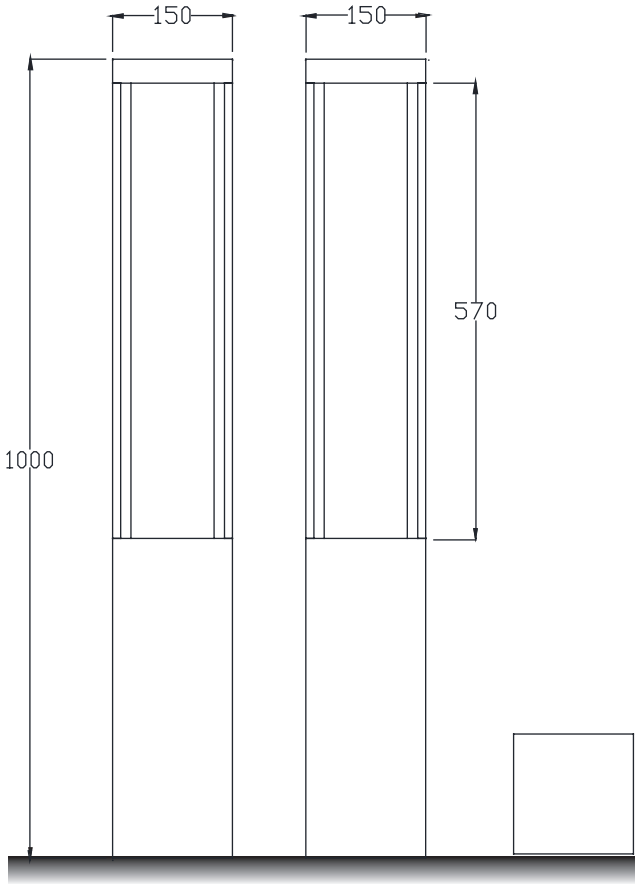

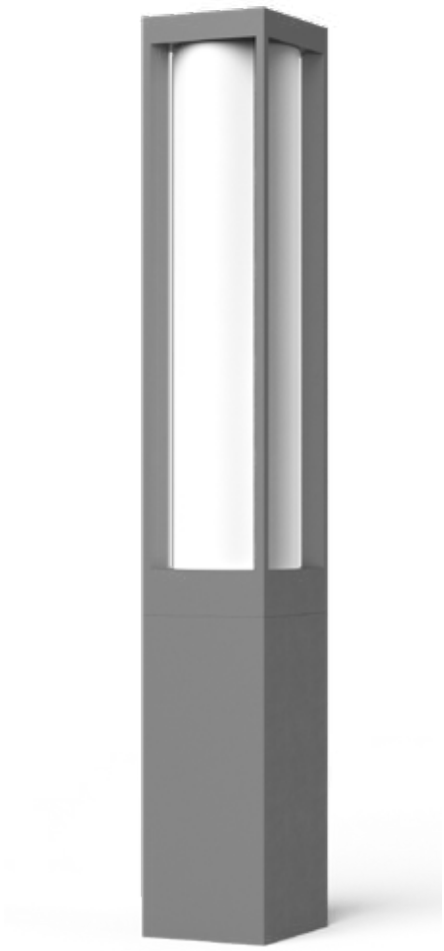

Installation plate

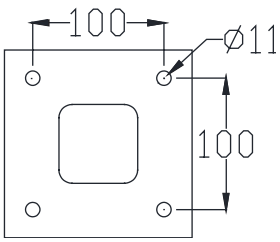

DM-SE51b

Colo(u)r temperature

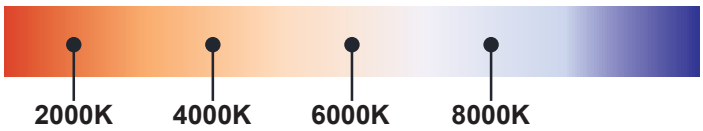

Bollard light

IP65

Rated power	12W	Power Factor	> 0.9
LED Quantity	1pcs	Life	> 50000H
Color Temperature	6000k/4000k/3000k	THD	< 15%
Luminous Flux	1100lm	Frequency Range	50/60HZ
Input Voltage	AC100~277V	Lnstallation Pipe Diameter	/
Protection Grade	IP65	CRI	> 90
Operating Temperature	-30~50℃		

DM-SE51b

Standard colours

9004 9006 9007 9016

Bollard light

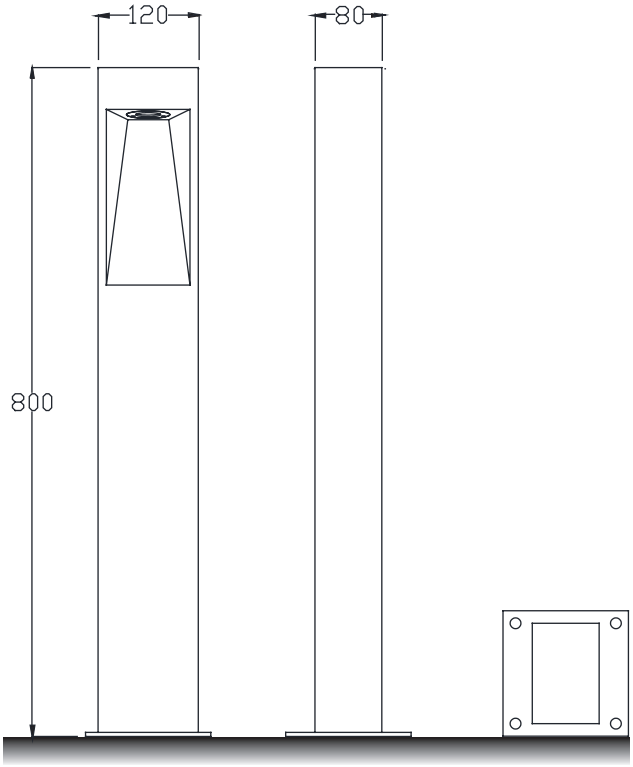

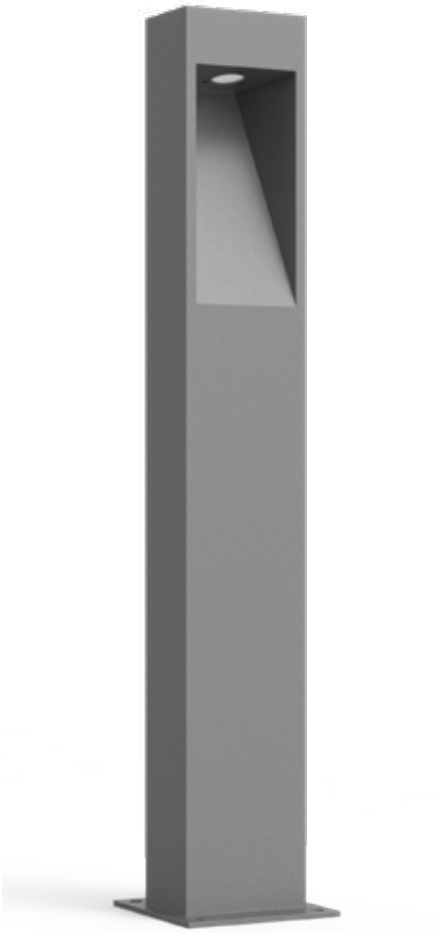

Installation plate

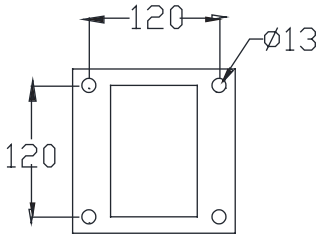

DM-SE52a

Colo(u)r temperature

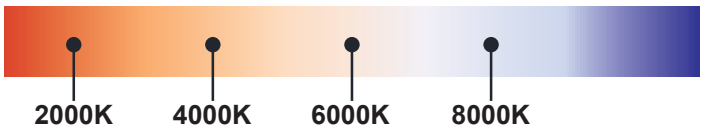

Bollard light

IP65

Rated power	12W	Power Factor	> 0.9
LED Quantity	1pcs	Life	> 50000H
Color Temperature	6000k/4000k/3000k	THD	< 15%
Luminous Flux	1100lm	Frequency Range	50/60HZ
Input Voltage	AC100~277V	Lnstallation Pipe Diameter	/
Protection Grade	IP65	CRI	> 90
Operating Temperature	-30~50℃		

DM-SE52a

Standard colours

9004 9006 9007 9016

Bollard light

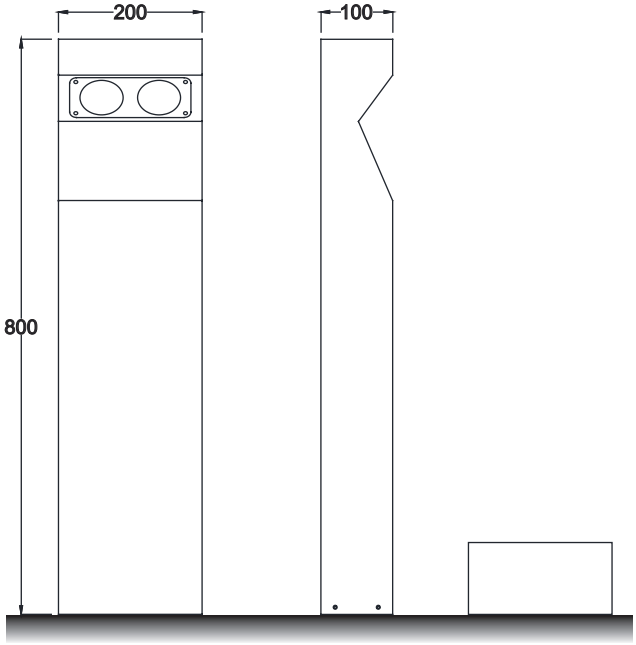

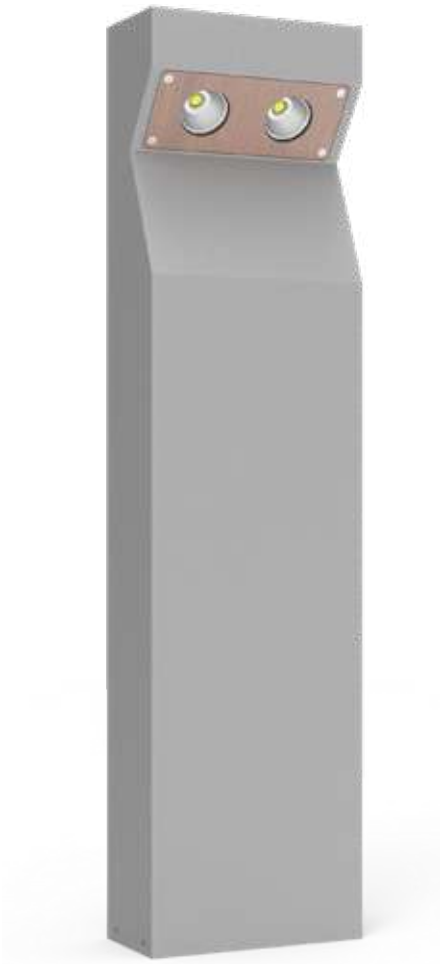

Installation plate

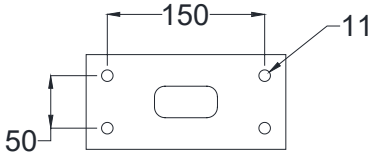

DM-SE53a

Colo(u)r temperature

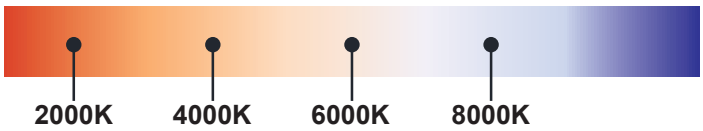

Bollard light

IP65

Rated power	12W	Power Factor	> 0.9
LED Quantity	1pcs	Life	> 50000H
Color Temperature	6000k/4000k/3000k	THD	< 15%
Luminous Flux	1100lm	Frequency Range	50/60HZ
Input Voltage	AC100~277V	Lnstallation Pipe Diameter	/
Protection Grade	IP65	CRI	> 90
Operating Temperature	-30~50℃		

DM-SE53a

Standard colours

9004 9006 9007 9016

Bollard light

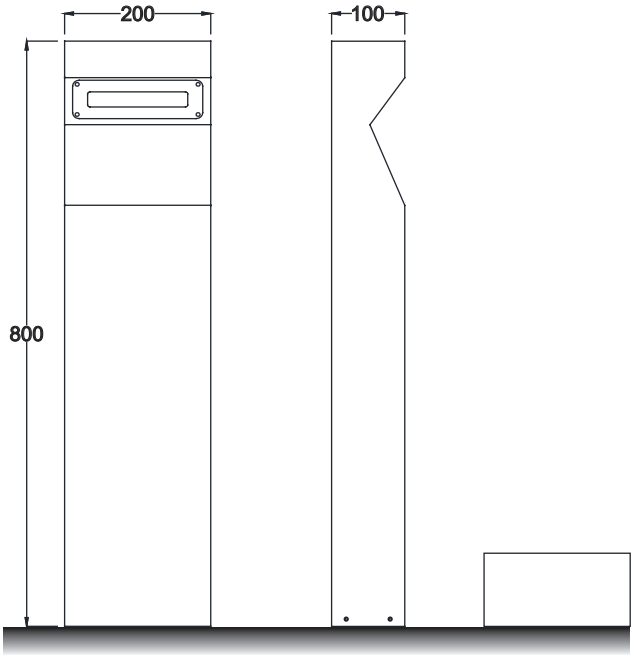

Installation plate

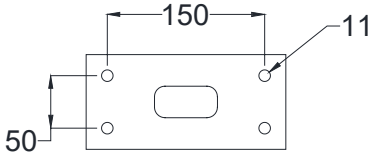

DM-SE53b

Colo(u)r temperature

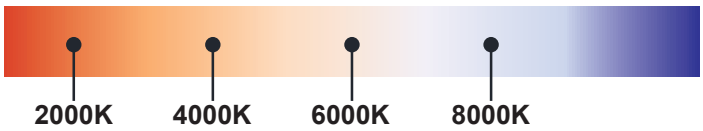

Bollard light

IP65

Rated power	12W	Power Factor	> 0.9
LED Quantity	1pcs	Life	> 50000H
Color Temperature	6000k/4000k/3000k	THD	< 15%
Luminous Flux	1100lm	Frequency Range	50/60HZ
Input Voltage	AC100~277V	Lnstallation Pipe Diameter	/
Protection Grade	IP65	CRI	> 90
Operating Temperature	-30~50℃		

DM-SE53b

Standard colours

9004 9006 9007 9016

Bollard light

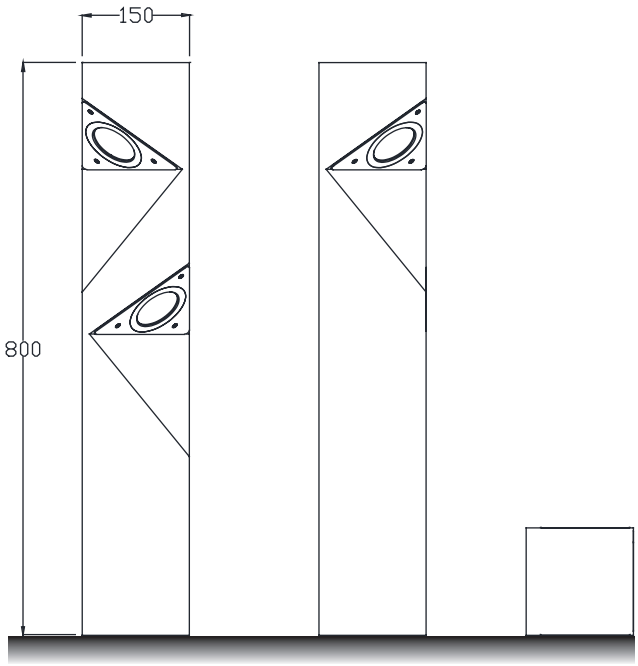

Installation plate

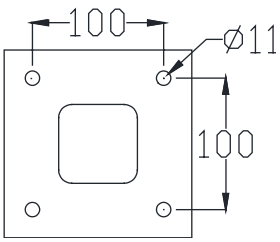

DM-SE54a

Colo(u)r temperature

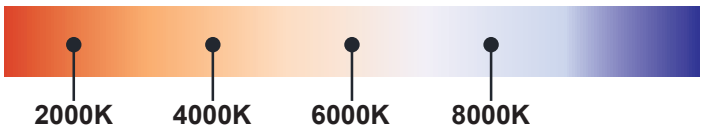

Bollard light

IP65

Rated power	12W	Power Factor	> 0.9
LED Quantity	1pcs	Life	> 50000H
Color Temperature	6000k/4000k/3000k	THD	< 15%
Luminous Flux	1100lm	Frequency Range	50/60HZ
Input Voltage	AC100~277V	Lnstallation Pipe Diameter	/
Protection Grade	IP65	CRI	> 90
Operating Temperature	-30~50℃		

DM-SE54a

Standard colours

9004 9006 9007 9016

Bollard light

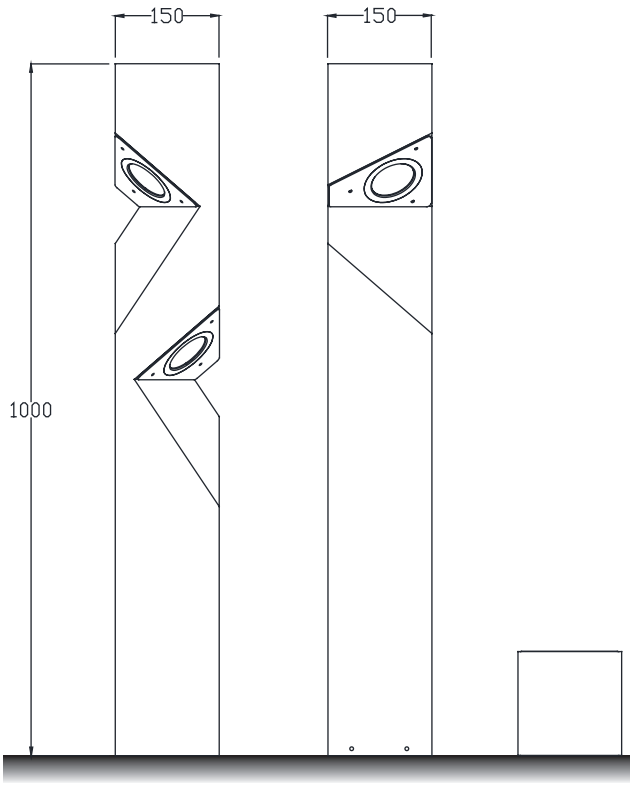

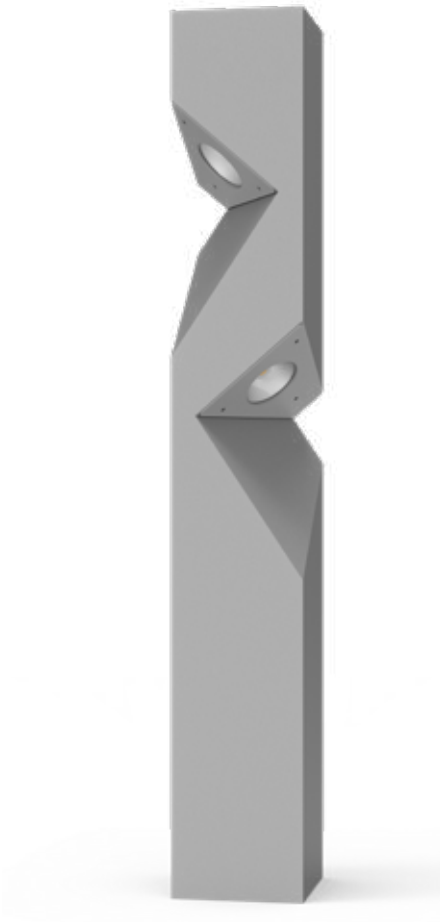

Installation plate

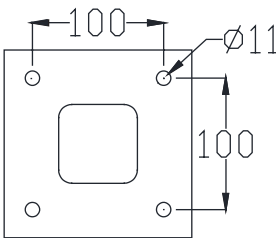

DM-SE54b

Colo(u)r temperature

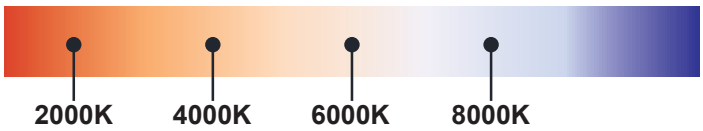

Bollard light

IP65

Rated power	12W	Power Factor	> 0.9
LED Quantity	1pcs	Life	> 50000H
Color Temperature	6000k/4000k/3000k	THD	< 15%
Luminous Flux	1100lm	Frequency Range	50/60HZ
Input Voltage	AC100~277V	Lnstallation Pipe Diameter	/
Protection Grade	IP65	CRI	> 90
Operating Temperature	-30~50℃		

DM-SE54ba

Standard colours

9004 9006 9007 9016

Bollard light

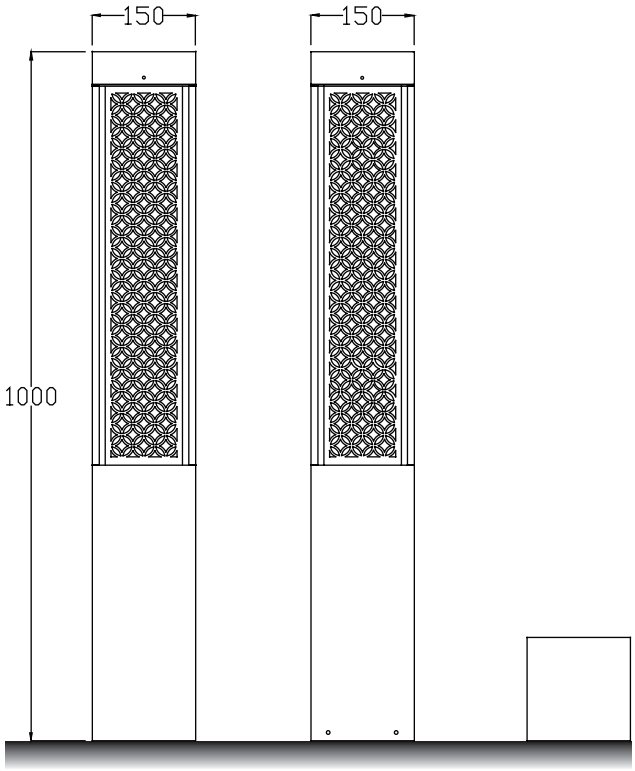

Installation plate

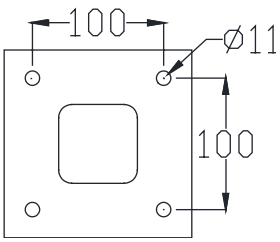

DM-SE55a

Colo(u)r temperature

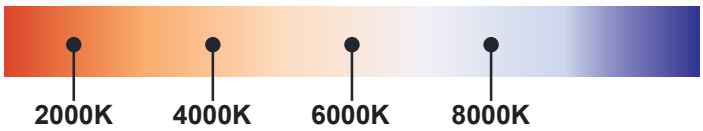

Bollard light

IP65

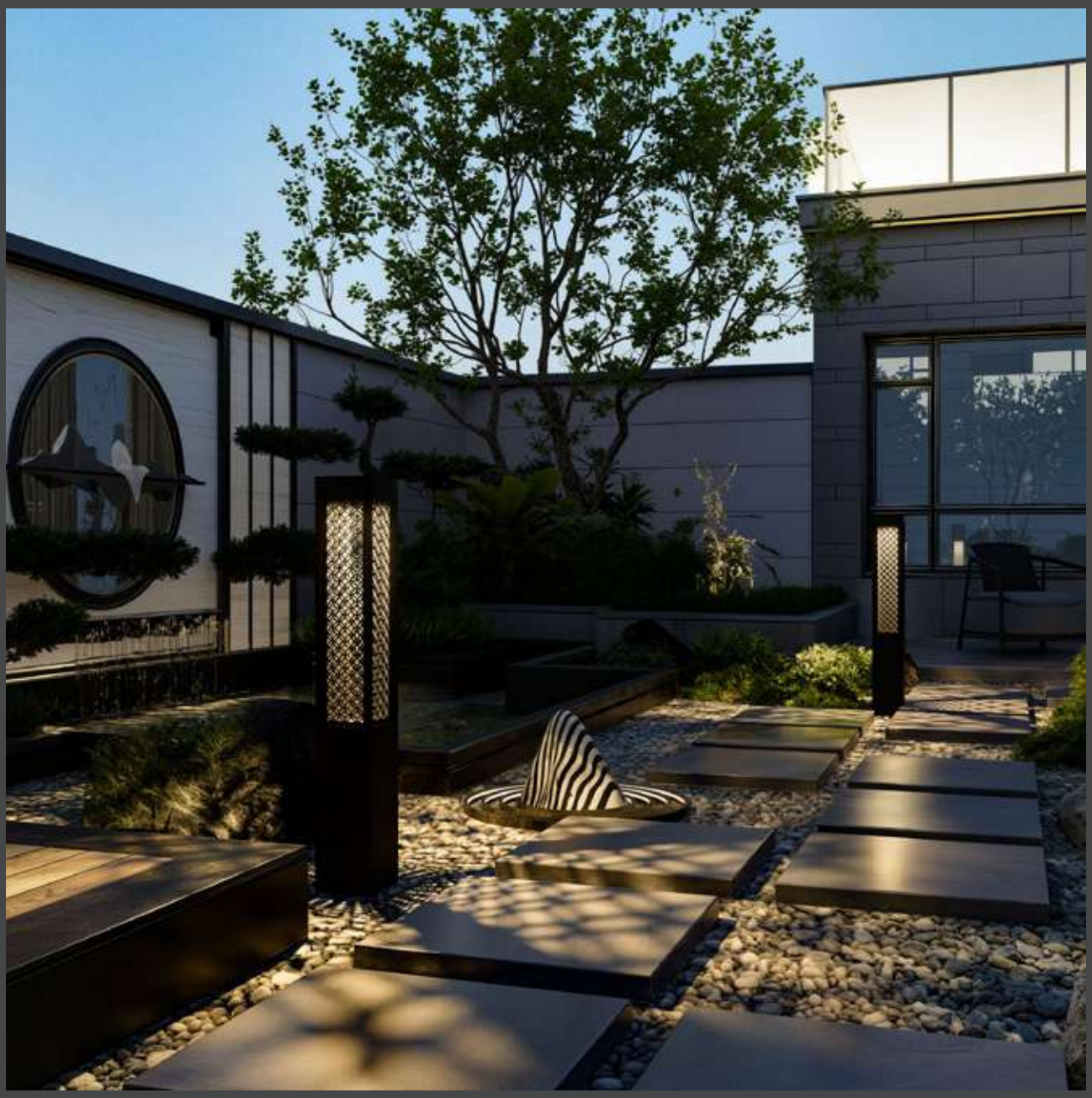

Rated power	12W	Power Factor	> 0.9
LED Quantity	1pcs	Life	> 50000H
Color Temperature	6000k/4000k/3000k	THD	< 15%
Luminous Flux	1100lm	Frequency Range	50/60HZ
Input Voltage	AC100~277V	Lnstallation Pipe Diameter	/
Protection Grade	IP65	CRI	> 90
Operating Temperature	-30~50℃		

DM-SE55a

Standard colours

9004 9006 9007 9016

Bollard light

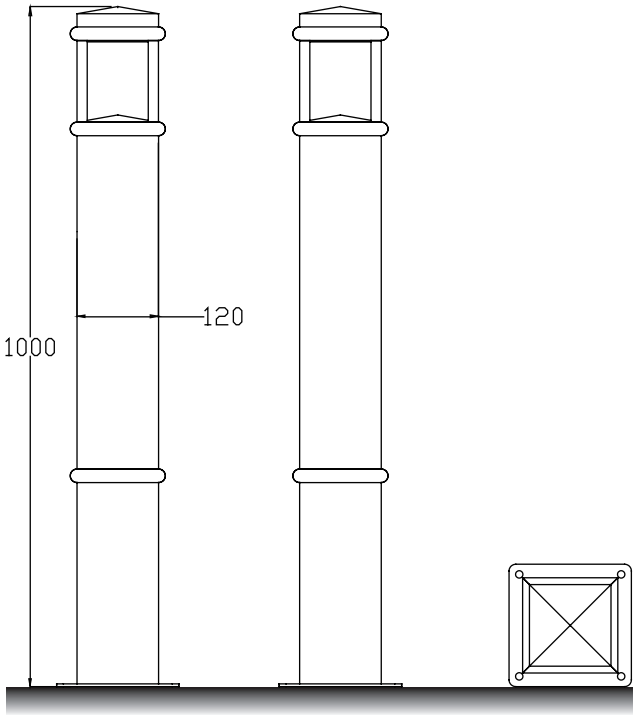

Installation plate

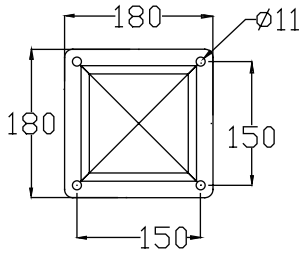

DM-SE56a

Colo(u)r temperature

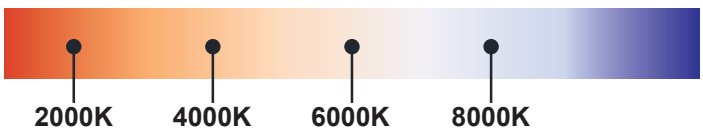

Bollard light

IP65

Rated power	12W	Power Factor	> 0.9
LED Quantity	1pcs	Life	> 50000H
Color Temperature	6000k/4000k/3000k	THD	< 15%
Luminous Flux	1100lm	Frequency Range	50/60HZ
Input Voltage	AC100~277V	Lnstallation Pipe Diameter	/
Protection Grade	IP65	CRI	> 90
Operating Temperature	-30~50℃		

DM-SE56a

Standard colours

9004 9006 9007 9016

Bollard light

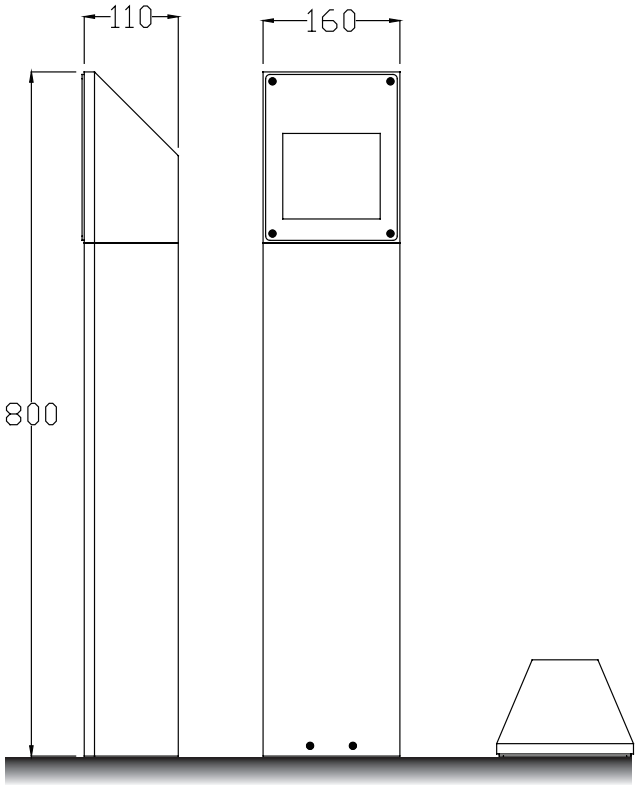

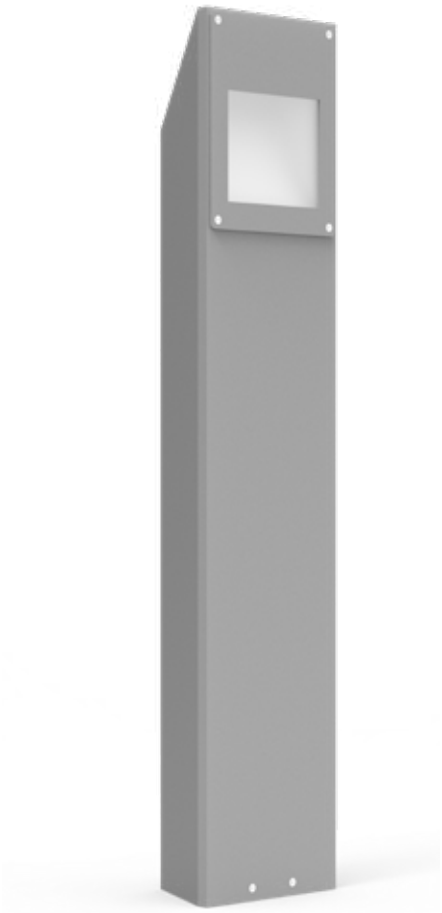

Installation plate

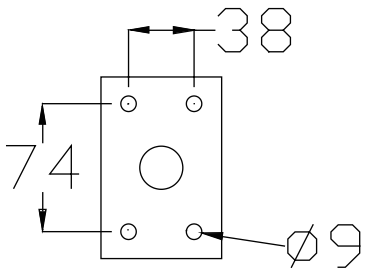

DM-SE57a

Colo(u)r temperature

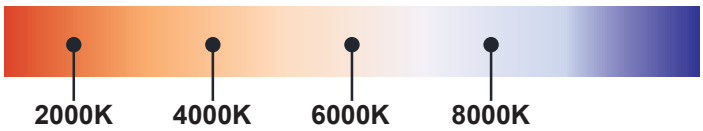

Bollard light

IP65

Rated power	12W	Power Factor	> 0.9
LED Quantity	1pcs	Life	> 50000H
Color Temperature	6000k/4000k/3000k	THD	< 15%
Luminous Flux	1100lm	Frequency Range	50/60HZ
Input Voltage	AC100~277V	Lnstallation Pipe Diameter	/
Protection Grade	IP65	CRI	> 90
Operating Temperature	-30~50℃		

DM-SE57a

Standard colours

9004 9006 9007 9016

Bollard light

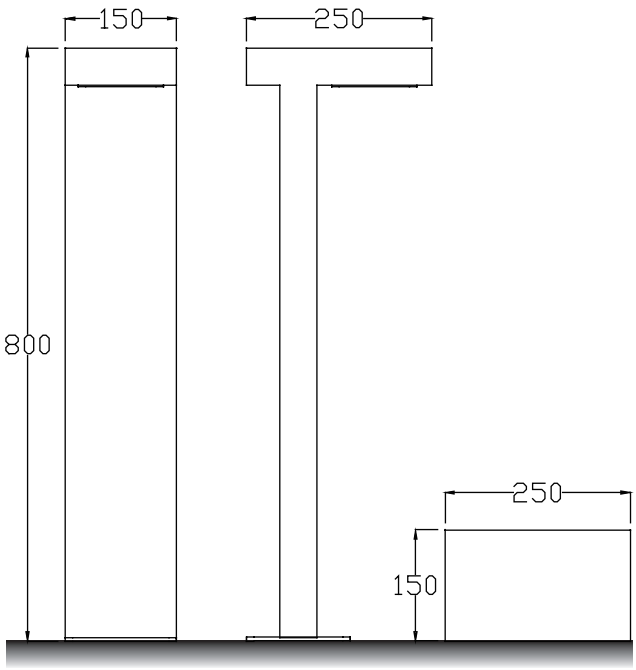

Installation plate

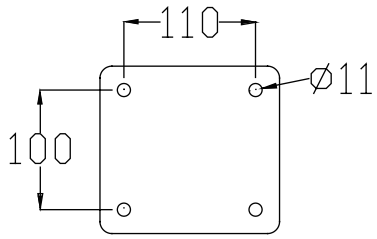

DM-SE58a

Colo(u)r temperature

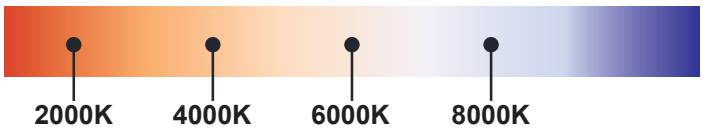

Bollard light

IP65

Rated power	12W	Power Factor	> 0.9
LED Quantity	1pcs	Life	> 50000H
Color Temperature	6000k/4000k/3000k	THD	< 15%
Luminous Flux	1100lm	Frequency Range	50/60HZ
Input Voltage	AC100~277V	Lnstallation Pipe Diameter	/
Protection Grade	IP65	CRI	> 90
Operating Temperature	-30~50℃		

DM-SE58a

Standard colours

9004 9006 9007 9016

Bollard light

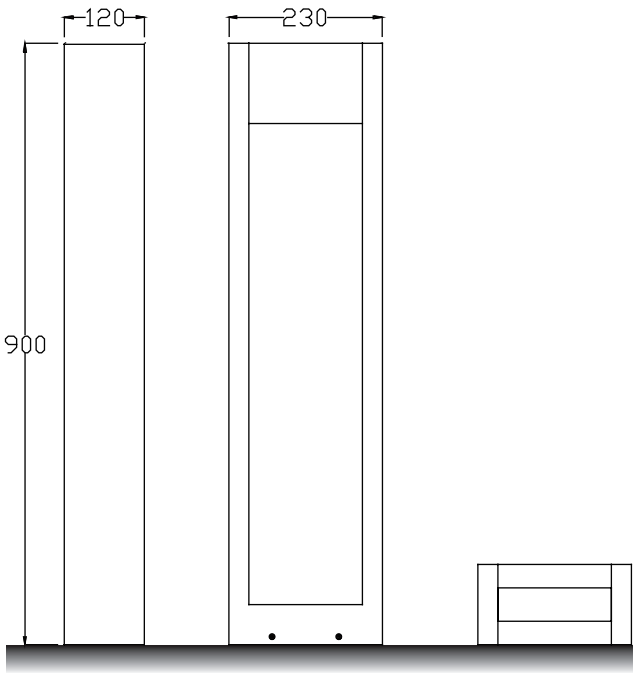

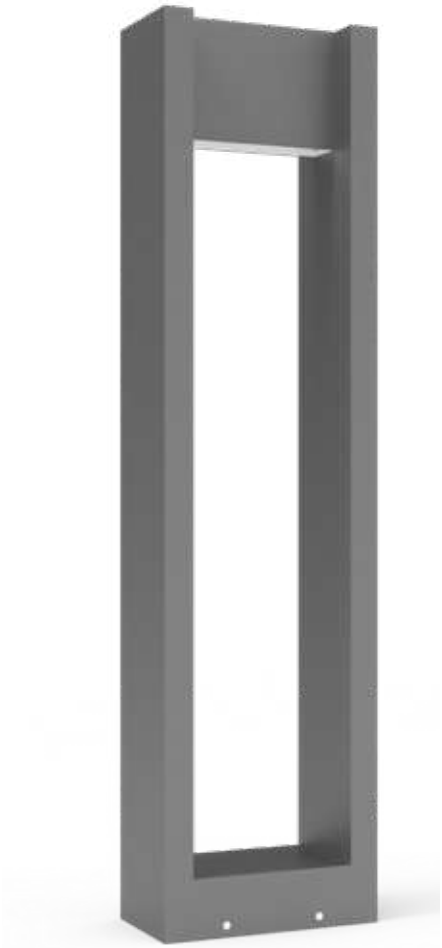

Installation plate

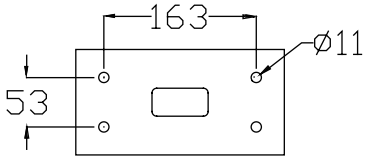

DM-SE59a

Colo(u)r temperature

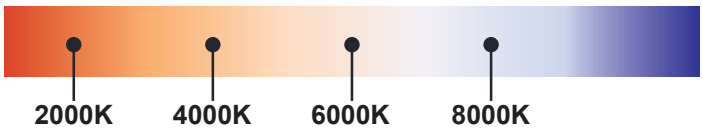

Bollard light

IP65

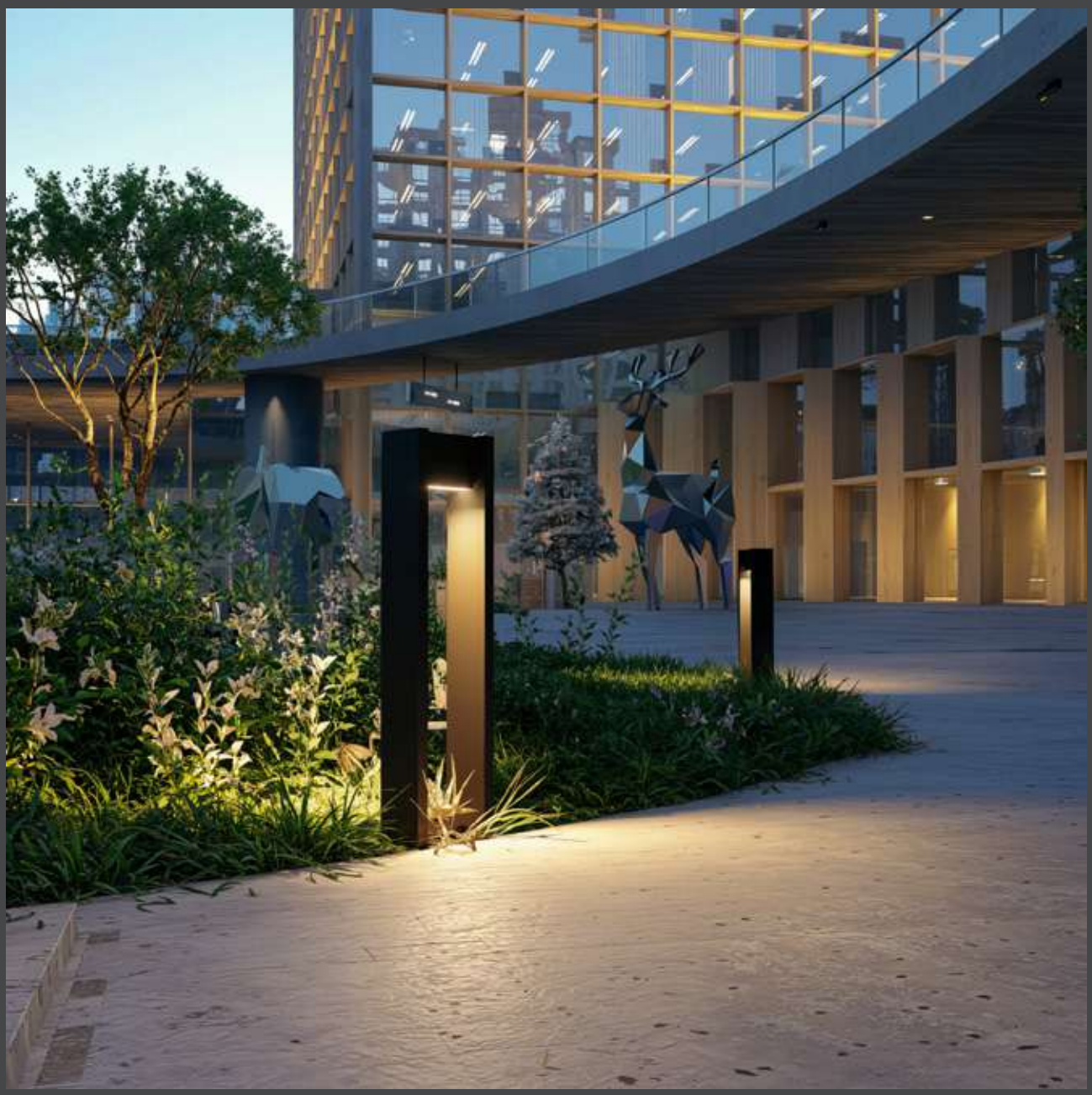

Rated power	12W	Power Factor	> 0.9
LED Quantity	1pcs	Life	> 50000H
Color Temperature	6000k/4000k/3000k	THD	< 15%
Luminous Flux	1100lm	Frequency Range	50/60HZ
Input Voltage	AC100~277V	Lnstallation Pipe Diameter	/
Protection Grade	IP65	CRI	> 90
Operating Temperature	-30~50℃		

DM-SE59a

Standard colours

9004 9006 9007 9016

Bollard light

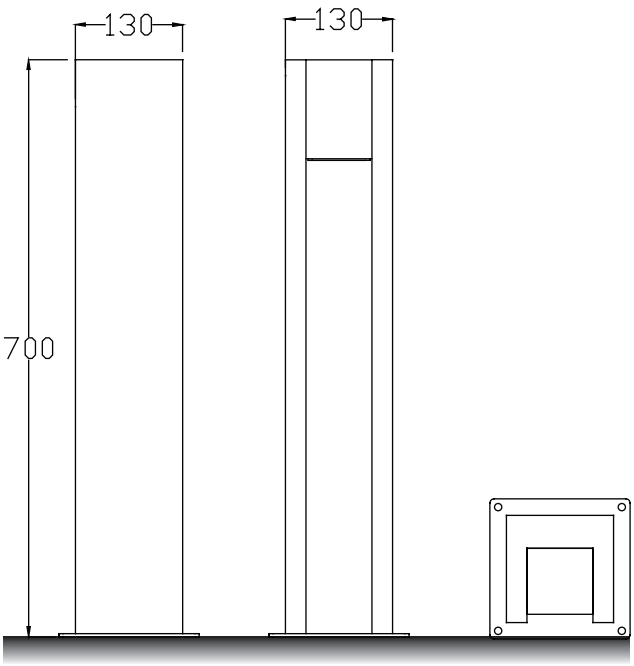

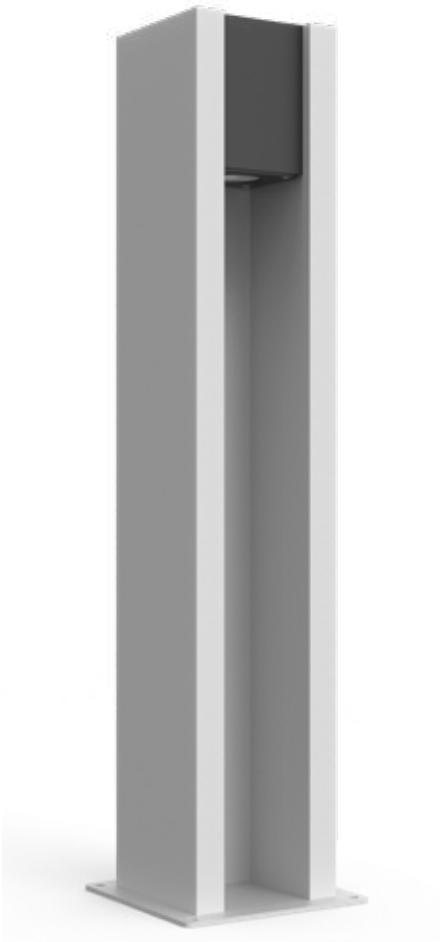

Installation plate

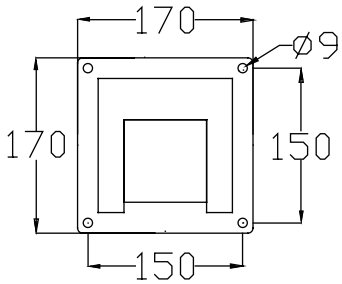

DM-SE60a

Colo(u)r temperature

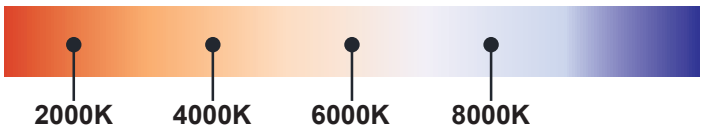

Bollard light

IP65

Rated power	12W	Power Factor	> 0.9
LED Quantity	1pcs	Life	> 50000H
Color Temperature	6000k/4000k/3000k	THD	< 15%
Luminous Flux	1100lm	Frequency Range	50/60HZ
Input Voltage	AC100~277V	Lnstallation Pipe Diameter	/
Protection Grade	IP65	CRI	> 90
Operating Temperature	-30~50℃		

DM-SE60a

Standard colours

9004 9006 9007 9016

Bollard light

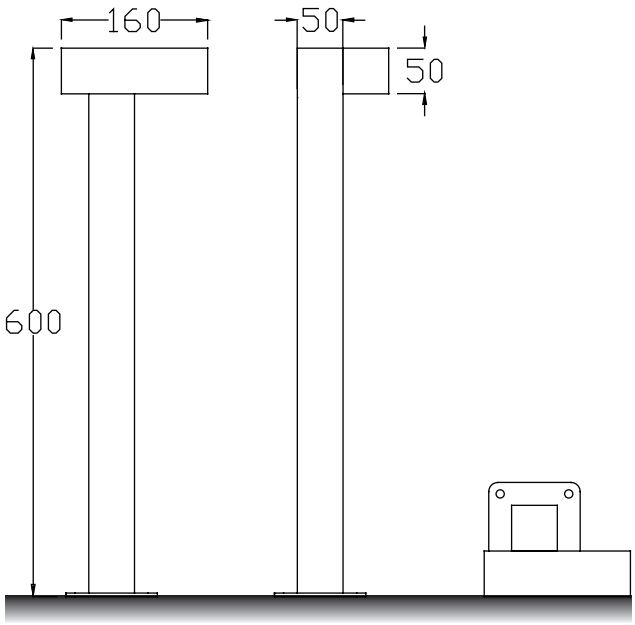

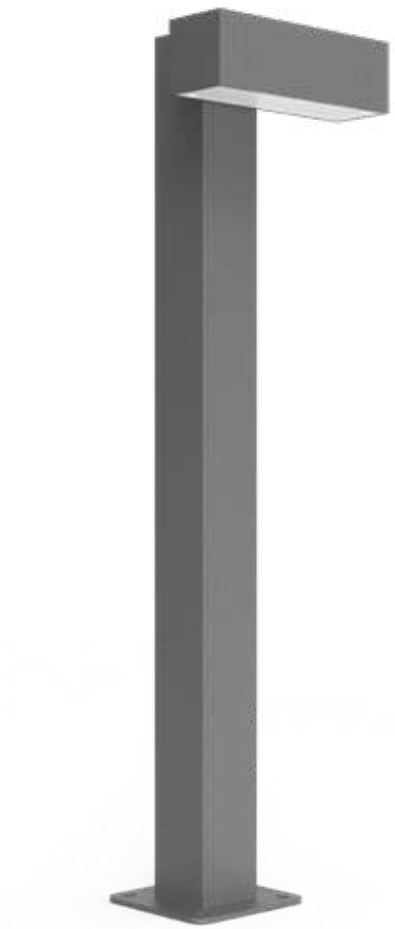

Installation plate

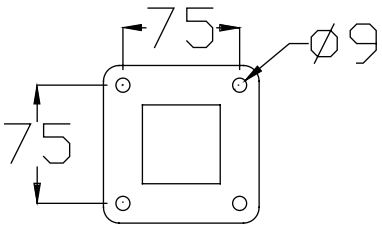

DM-SE61a

Colo(u)r temperature

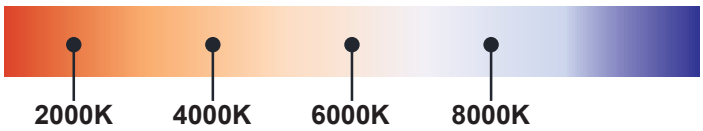

Bollard light

IP65

Rated power	12W	Power Factor	> 0.9
LED Quantity	1pcs	Life	> 50000H
Color Temperature	6000k/4000k/3000k	THD	< 15%
Luminous Flux	1100lm	Frequency Range	50/60HZ
Input Voltage	AC100~277V	Lnstallation Pipe Diameter	/
Protection Grade	IP65	CRI	> 90
Operating Temperature	-30~50℃		

DM-SE61a

Standard colours

9004 9006 9007 9016

Bollard light

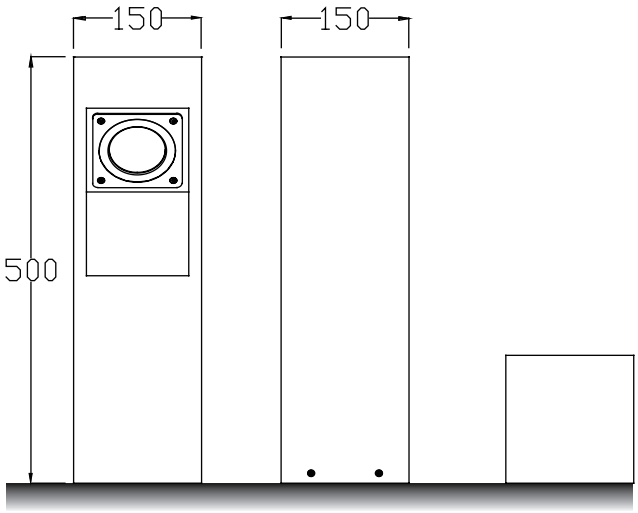

Installation plate

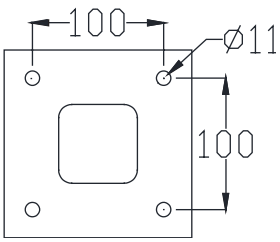

DM-SE62a

Colo(u)r temperature

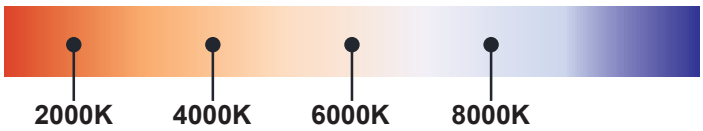

Bollard light

IP65

Rated power	12W	Power Factor	> 0.9
LED Quantity	1pcs	Life	> 50000H
Color Temperature	6000k/4000k/3000k	THD	< 15%
Luminous Flux	1100lm	Frequency Range	50/60HZ
Input Voltage	AC100~277V	Lnstallation Pipe Diameter	/
Protection Grade	IP65	CRI	> 90
Operating Temperature	-30~50℃		

DM-SE62a

Standard colours

9004 9006 9007 9016

Bollard light

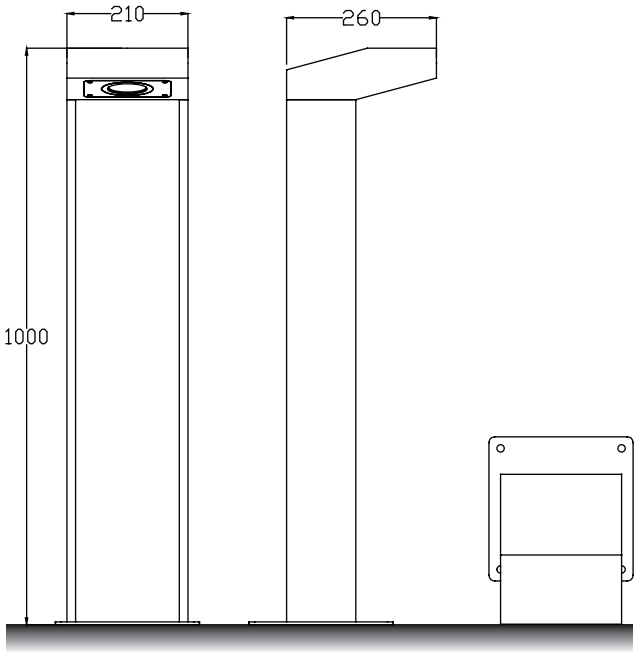

Installation plate

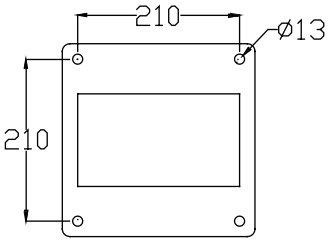

DM-SE63a

Colo(u)r temperature

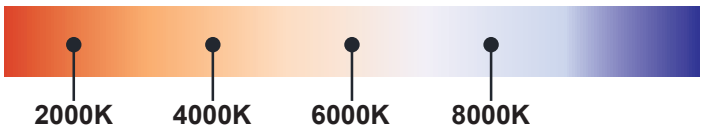

Bollard light

IP65

Rated power	12W	Power Factor	> 0.9
LED Quantity	1pcs	Life	> 50000H
Color Temperature	6000k/4000k/3000k	THD	< 15%
Luminous Flux	1100lm	Frequency Range	50/60HZ
Input Voltage	AC100~277V	Lnstallation Pipe Diameter	/
Protection Grade	IP65	CRI	> 90
Operating Temperature	-30~50℃		

DM-SE63a

Standard colours

9004 9006 9007 9016

Bollard light

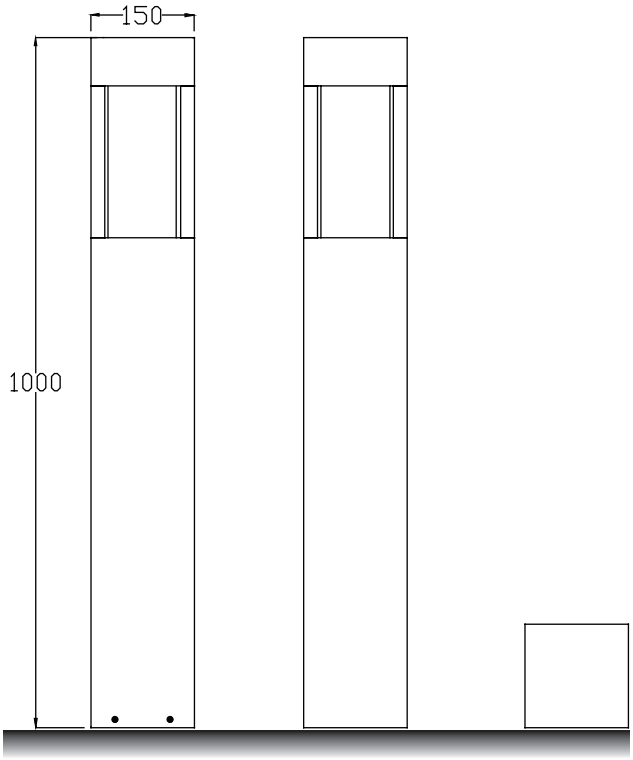

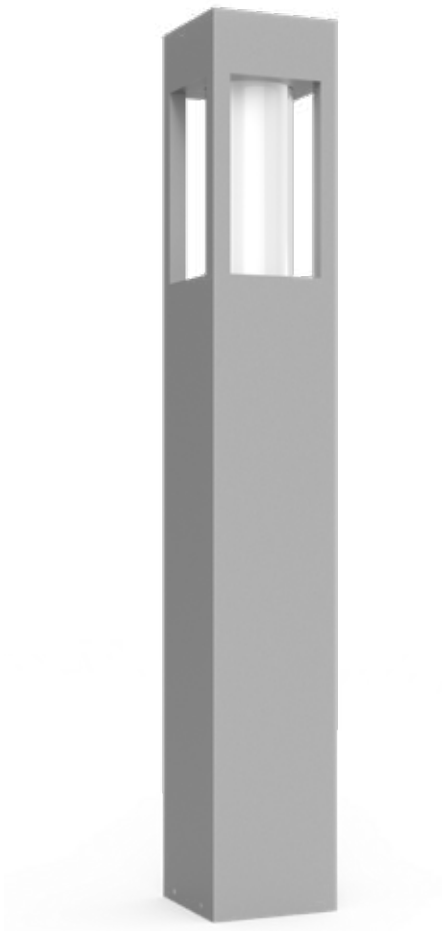

Installation plate

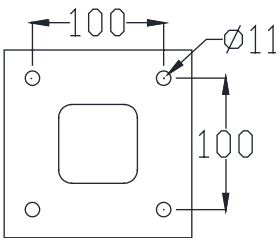

DM-SE64a

Colo(u)r temperature

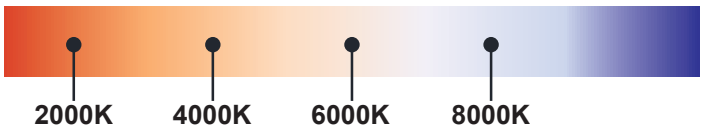

Bollard light

IP65

Rated power	12W	Power Factor	> 0.9
LED Quantity	1pcs	Life	> 50000H
Color Temperature	6000k/4000k/3000k	THD	< 15%
Luminous Flux	1100lm	Frequency Range	50/60HZ
Input Voltage	AC100~277V	Lnstallation Pipe Diameter	/
Protection Grade	IP65	CRI	> 90
Operating Temperature	-30~50℃		

DM-SE64a

Standard colours

9004 9006 9007 9016

Bollard light

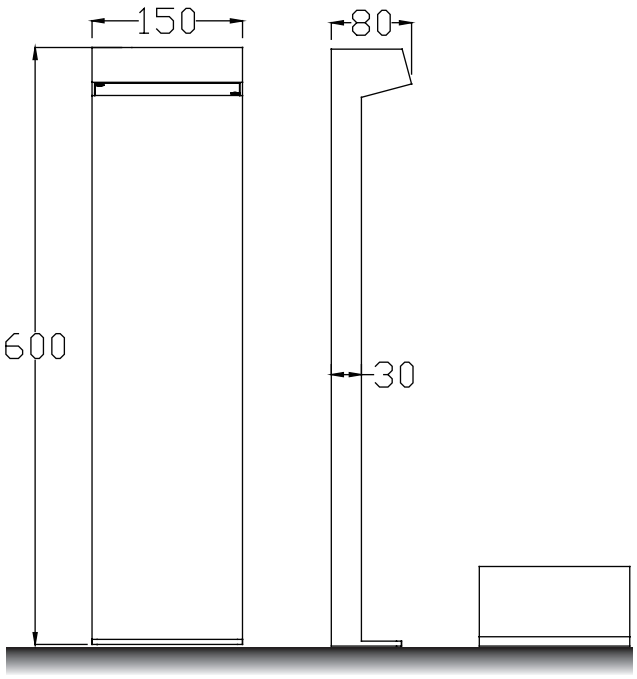

Installation plate

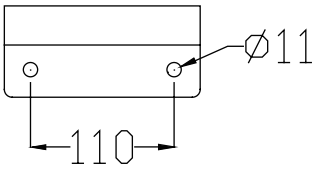

DM-SE65a

Colo(u)r temperature

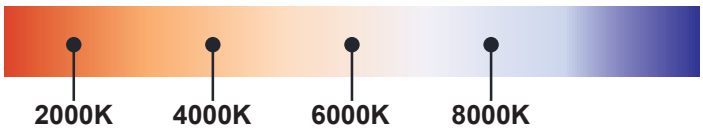

Bollard light

IP65

Rated power	12W	Power Factor	> 0.9
LED Quantity	1pcs	Life	> 50000H
Color Temperature	6000k/4000k/3000k	THD	< 15%
Luminous Flux	1100lm	Frequency Range	50/60HZ
Input Voltage	AC100~277V	Lnstallation Pipe Diameter	/
Protection Grade	IP65	CRI	> 90
Operating Temperature	-30~50℃		

DM-SE65a

Standard colours

9004 9006 9007 9016

Bollard light

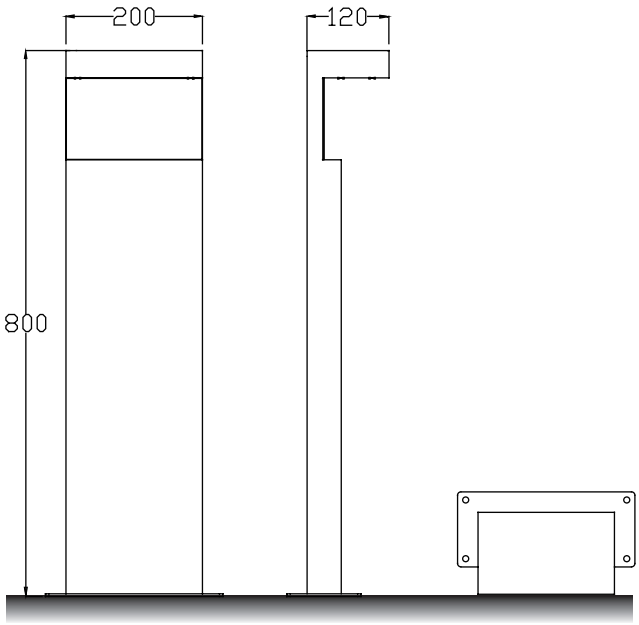

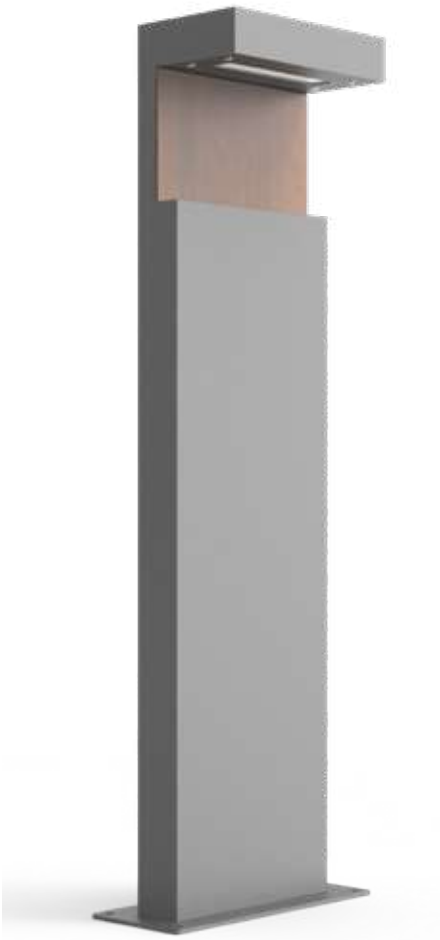

Installation plate

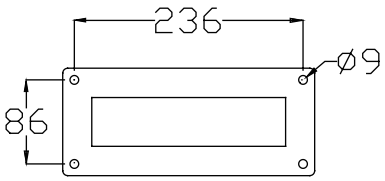

DM-SE66a

Colo(u)r temperature

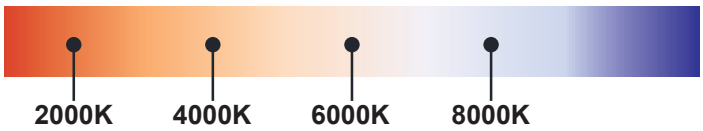

Bollard light

IP65

Rated power	12W	Power Factor	> 0.9
LED Quantity	1pcs	Life	> 50000H
Color Temperature	6000k/4000k/3000k	THD	< 15%
Luminous Flux	1100lm	Frequency Range	50/60HZ
Input Voltage	AC100~277V	Lnstallation Pipe Diameter	/
Protection Grade	IP65	CRI	> 90
Operating Temperature	-30~50℃		

DM-SE66a

Standard colours

9004 9006 9007 9016

Bollard light

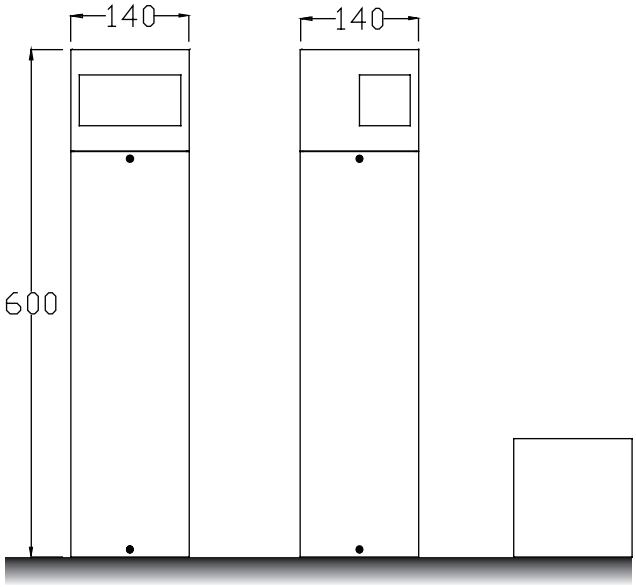

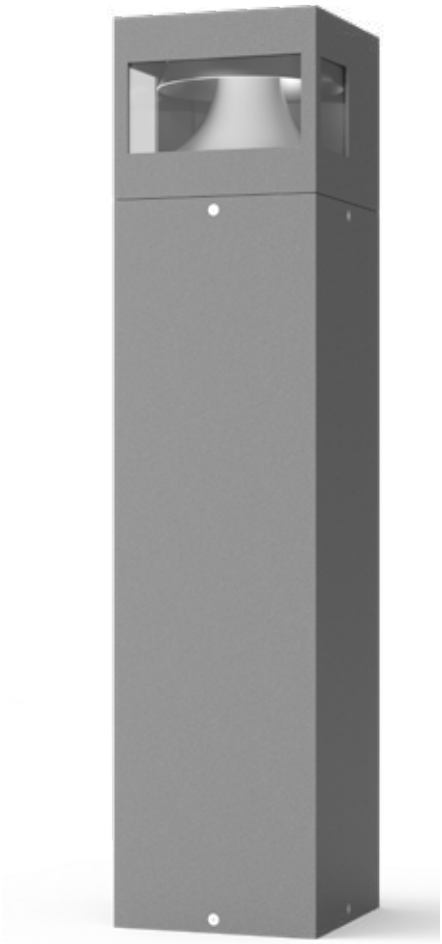

Installation plate

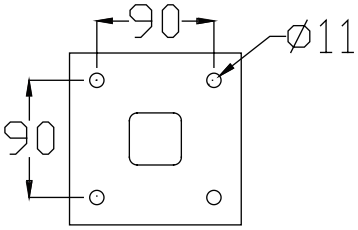

DM-SE67a

Colo(u)r temperature

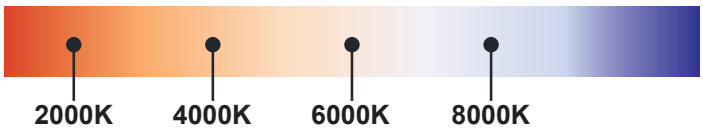

Bollard light

IP65

Rated power	12W	Power Factor	> 0.9
LED Quantity	1pcs	Life	> 50000H
Color Temperature	6000k/4000k/3000k	THD	< 15%
Luminous Flux	1100lm	Frequency Range	50/60HZ
Input Voltage	AC100~277V	Lnstallation Pipe Diameter	/
Protection Grade	IP65	CRI	> 90
Operating Temperature	-30~50℃		

DM-SE67a

Standard colours

9004 9006 9007 9016

Bollard light

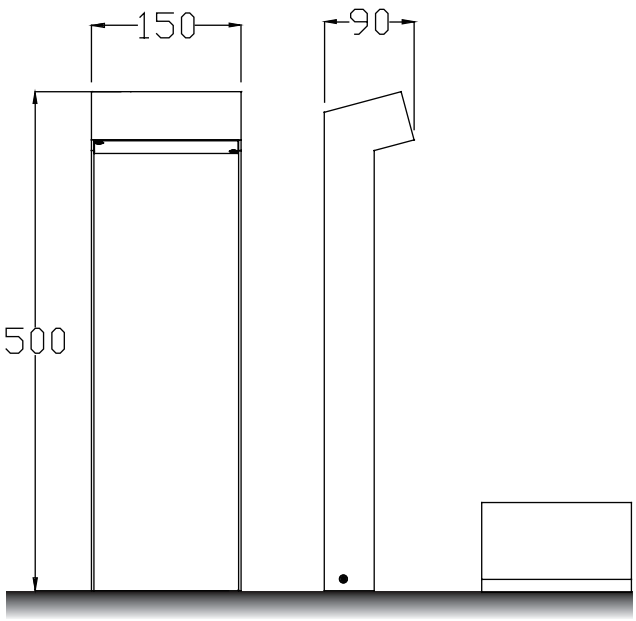

Installation plate

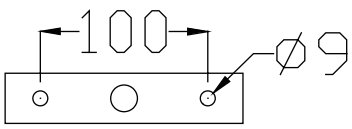

DM-SE68a

Colo(u)r temperature

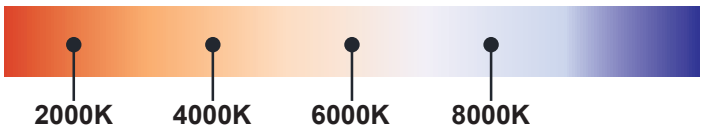

Bollard light

IP65

Rated power	12W	Power Factor	> 0.9
LED Quantity	1pcs	Life	> 50000H
Color Temperature	6000k/4000k/3000k	THD	< 15%
Luminous Flux	1100lm	Frequency Range	50/60HZ
Input Voltage	AC100~277V	Lnstallation Pipe Diameter	/
Protection Grade	IP65	CRI	> 90
Operating Temperature	-30~50℃		

DM-SE68a

Standard colours

9004 9006 9007 9016

Bollard light

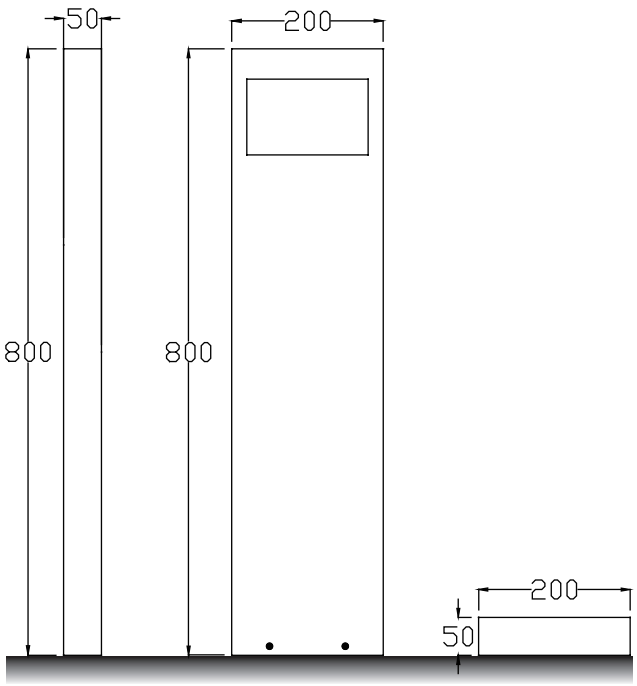

Installation plate

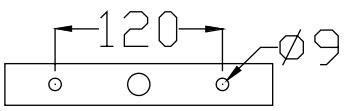

DM-SE69a

Colo(u)r temperature

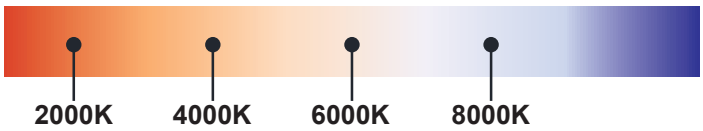

Bollard light

IP65

Rated power	12W	Power Factor	> 0.9
LED Quantity	1pcs	Life	> 50000H
Color Temperature	6000k/4000k/3000k	THD	< 15%
Luminous Flux	1100lm	Frequency Range	50/60HZ
Input Voltage	AC100~277V	Lnstallation Pipe Diameter	/
Protection Grade	IP65	CRI	> 90
Operating Temperature	-30~50℃		

DM-SE69a

Standard colours

9004 9006 9007 9016

Bollard light

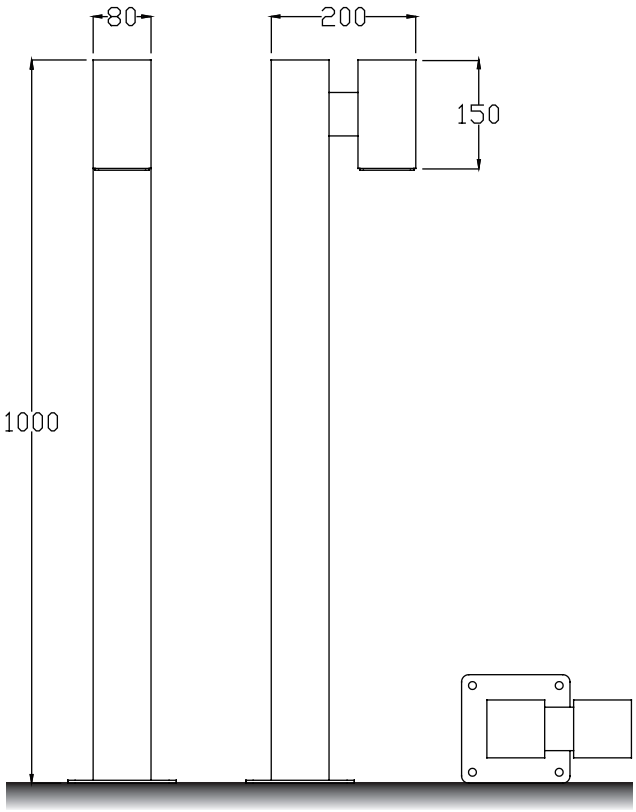

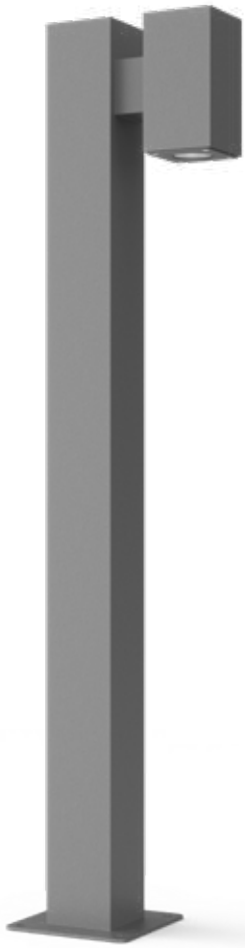

Installation plate

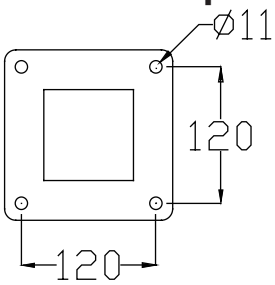

DM-SE70a

Colo(u)r temperature

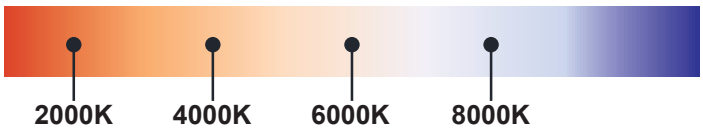

Bollard light

IP65

Rated power	12W	Power Factor	> 0.9
LED Quantity	1pcs	Life	> 50000H
Color Temperature	6000k/4000k/3000k	THD	< 15%
Luminous Flux	1100lm	Frequency Range	50/60HZ
Input Voltage	AC100~277V	Lnstallation Pipe Diameter	/
Protection Grade	IP65	CRI	> 90
Operating Temperature	-30~50℃		

DM-SE70a

Standard colours

9004 9006 9007 9016

Bollard light

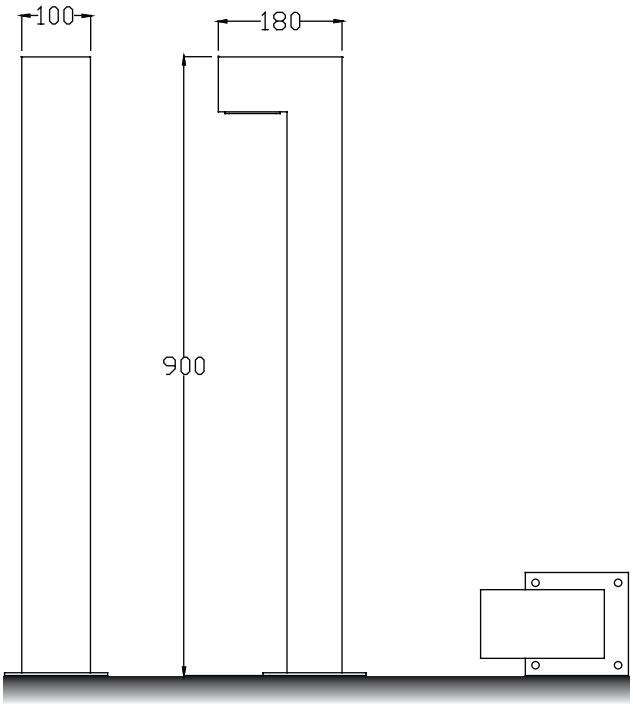

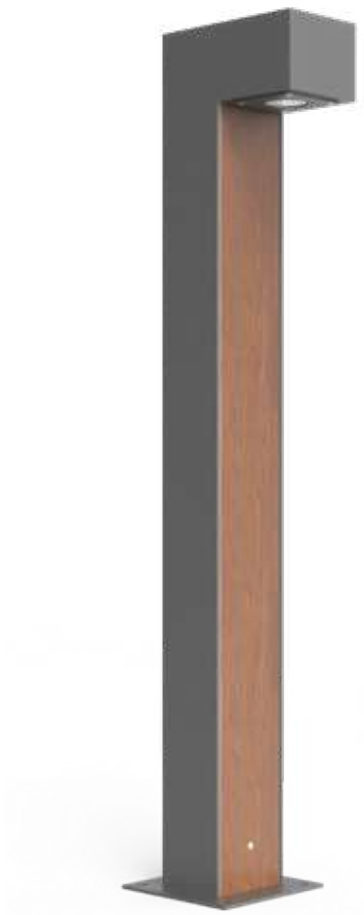

Installation plate

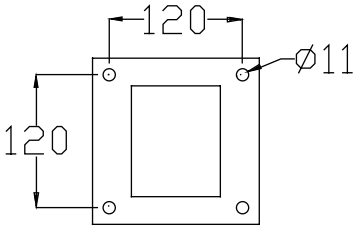

DM-SE71a

Colo(u)r temperature

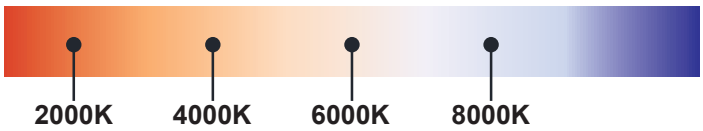

Bollard light

IP65

Rated power	12W	Power Factor	> 0.9
LED Quantity	1pcs	Life	> 50000H
Color Temperature	6000k/4000k/3000k	THD	< 15%
Luminous Flux	1100lm	Frequency Range	50/60HZ
Input Voltage	AC100~277V	Lnstallation Pipe Diameter	/
Protection Grade	IP65	CRI	> 90
Operating Temperature	-30~50℃		

DM-SE71a

Standard colours

9004 9006 9007 9016

Bollard light

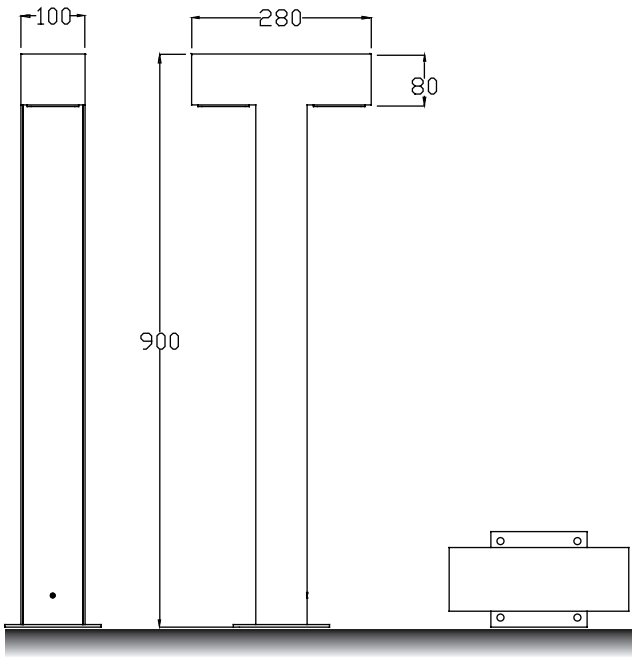

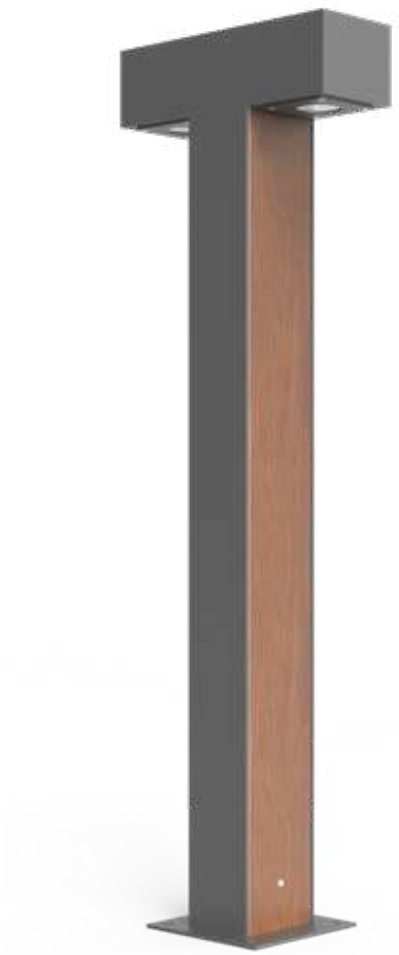

Installation plate

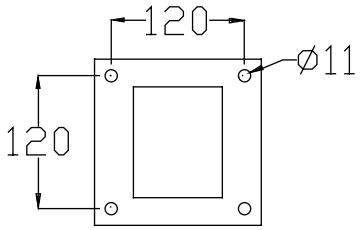

DM-SE71b

Colo(u)r temperature

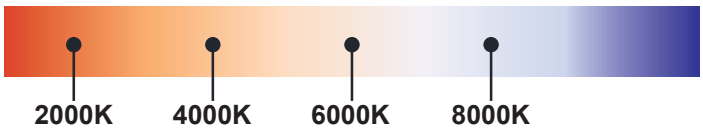

Bollard light

IP65

Rated power	12W	Power Factor	> 0.9
LED Quantity	1pcs	Life	> 50000H
Color Temperature	6000k/4000k/3000k	THD	< 15%
Luminous Flux	1100lm	Frequency Range	50/60HZ
Input Voltage	AC100~277V	Lnstallation Pipe Diameter	/
Protection Grade	IP65	CRI	> 90
Operating Temperature	-30~50℃		

DM-SE71b

Standard colours

9004 9006 9007 9016

Bollard light

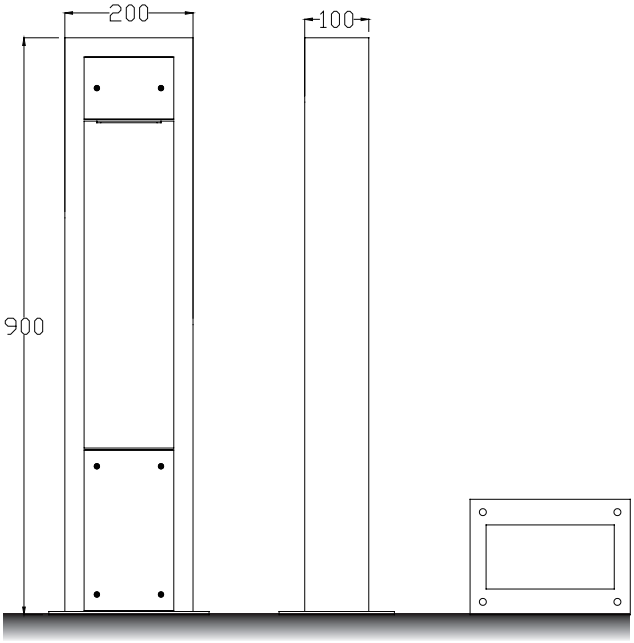

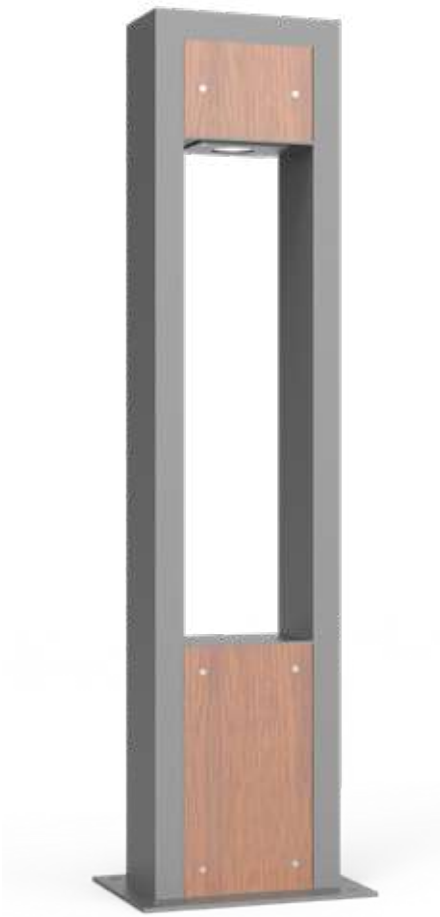

Installation plate

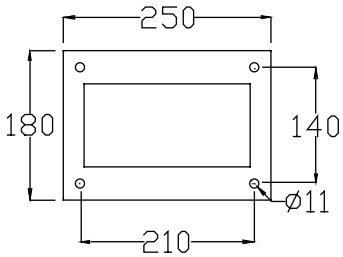

DM-SE72a

Colo(u)r temperature

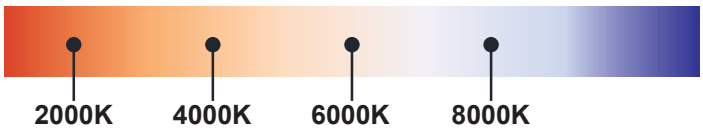

Bollard light

IP65

Rated power	12W	Power Factor	> 0.9
LED Quantity	1pcs	Life	> 50000H
Color Temperature	6000k/4000k/3000k	THD	< 15%
Luminous Flux	1100lm	Frequency Range	50/60HZ
Input Voltage	AC100~277V	Lnstallation Pipe Diameter	/
Protection Grade	IP65	CRI	> 90
Operating Temperature	-30~50℃		

DM-SE72a

Standard colours

9004 9006 9007 9016

Bollard light

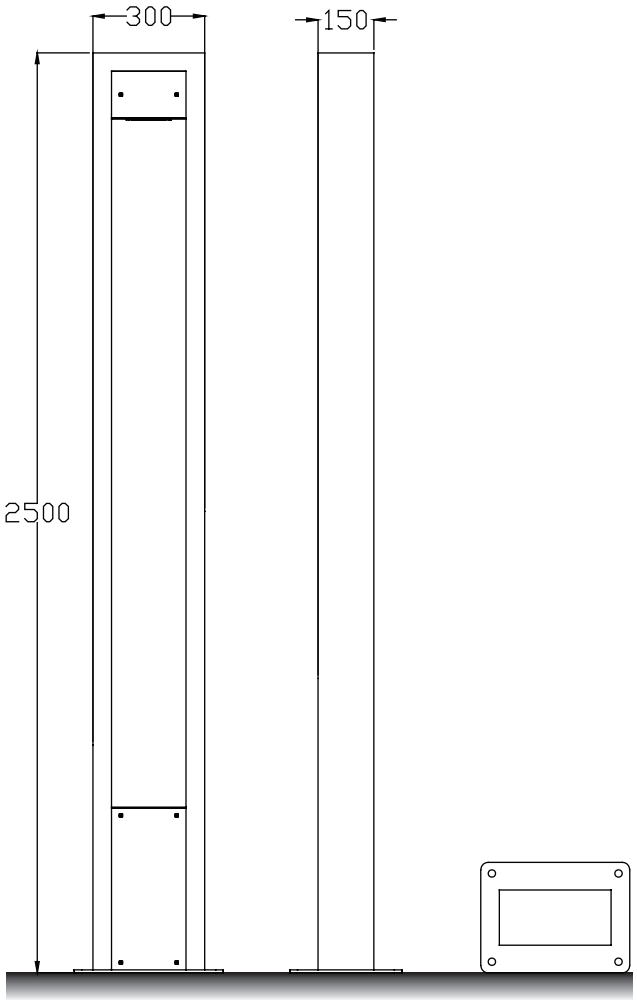

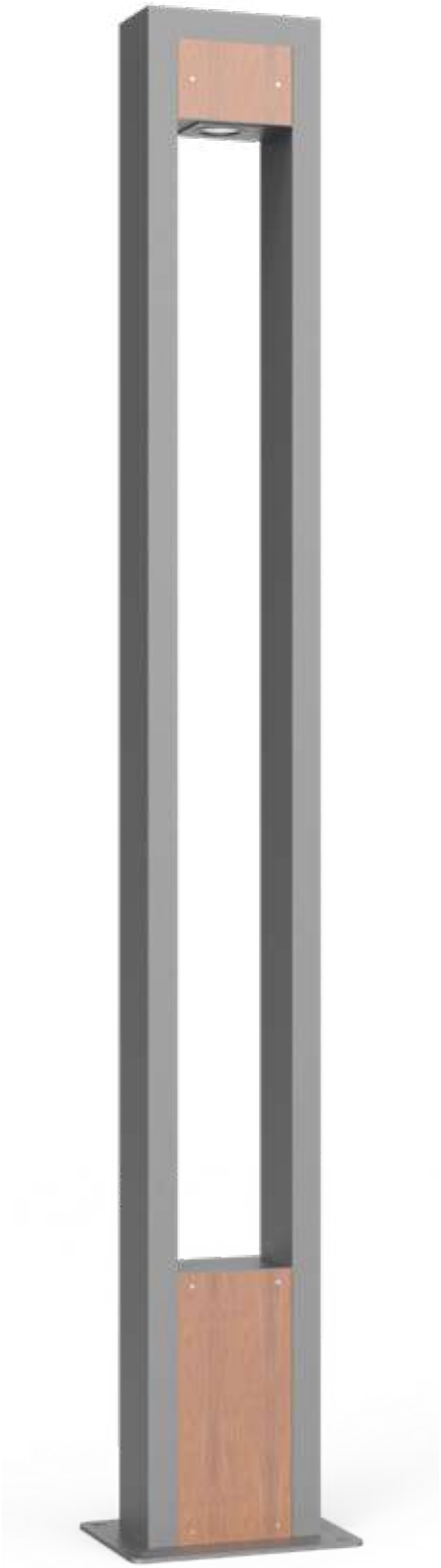

Installation plate

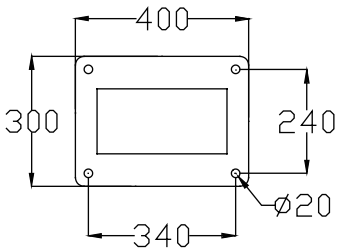

DM-SE72b

Colo(u)r temperature

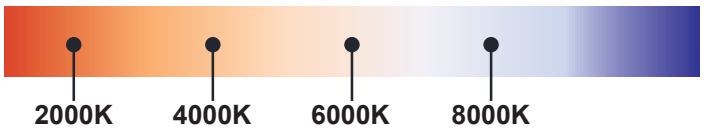

Bollard light

IP65

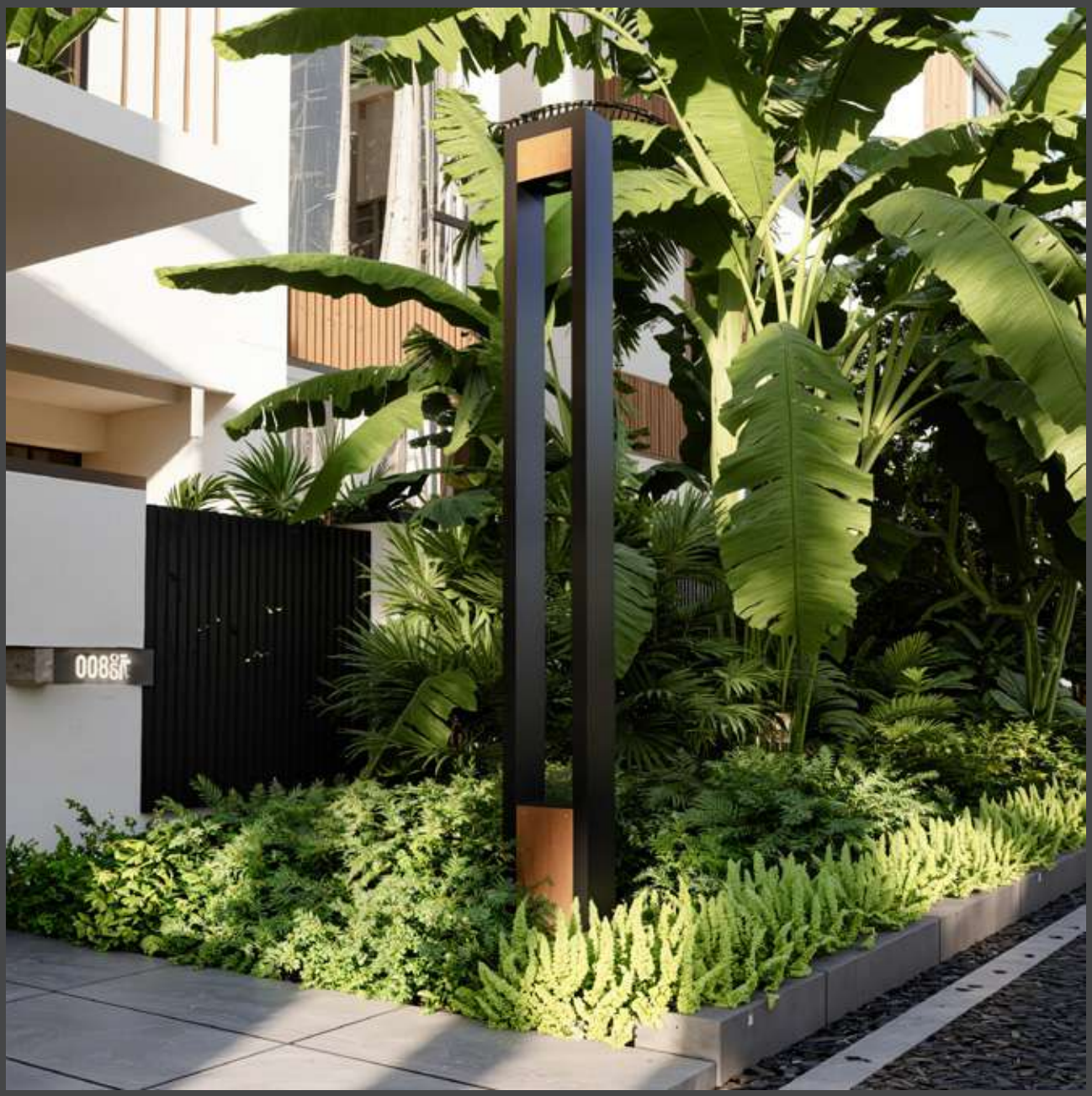

Rated power	12W	Power Factor	> 0.9
LED Quantity	1pcs	Life	> 50000H
Color Temperature	6000k/4000k/3000k	THD	< 15%
Luminous Flux	1100lm	Frequency Range	50/60HZ
Input Voltage	AC100~277V	Lnstallation Pipe Diameter	/
Protection Grade	IP65	CRI	> 90
Operating Temperature	-30~50℃		

DM-SE72b

Standard colours

9004 9006 9007 9016

Bollard light

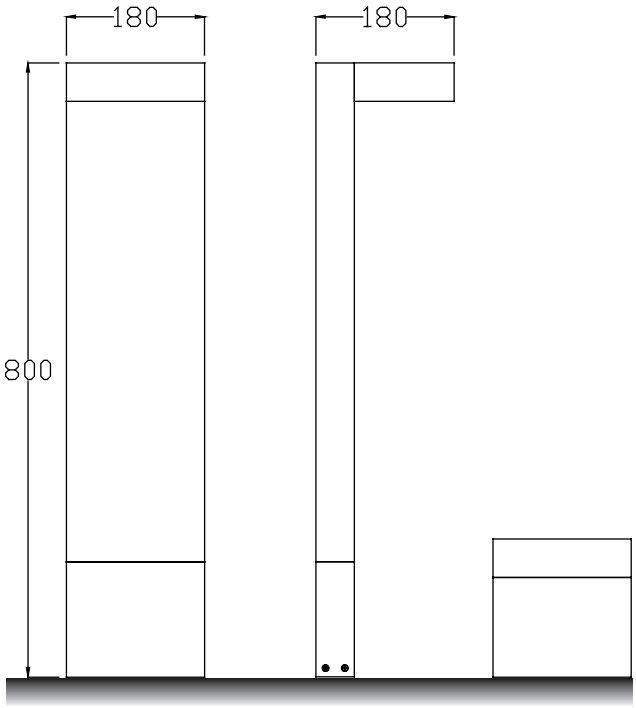

Installation plate

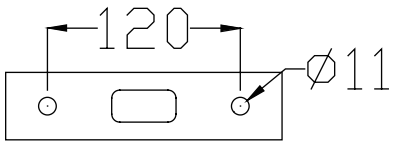

DM-SE73a

Colo(u)r temperature

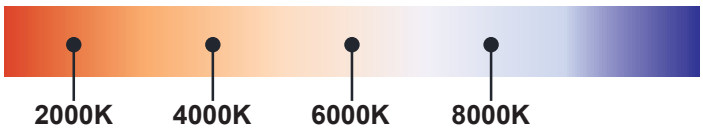

Bollard light

IP65

Rated power	12W	Power Factor	> 0.9
LED Quantity	1pcs	Life	> 50000H
Color Temperature	6000k/4000k/3000k	THD	< 15%
Luminous Flux	1100lm	Frequency Range	50/60HZ
Input Voltage	AC100~277V	Lnstallation Pipe Diameter	/
Protection Grade	IP65	CRI	> 90
Operating Temperature	-30~50℃		

DM-SE73a

Standard colours

9004 9006 9007 9016

Bollard light

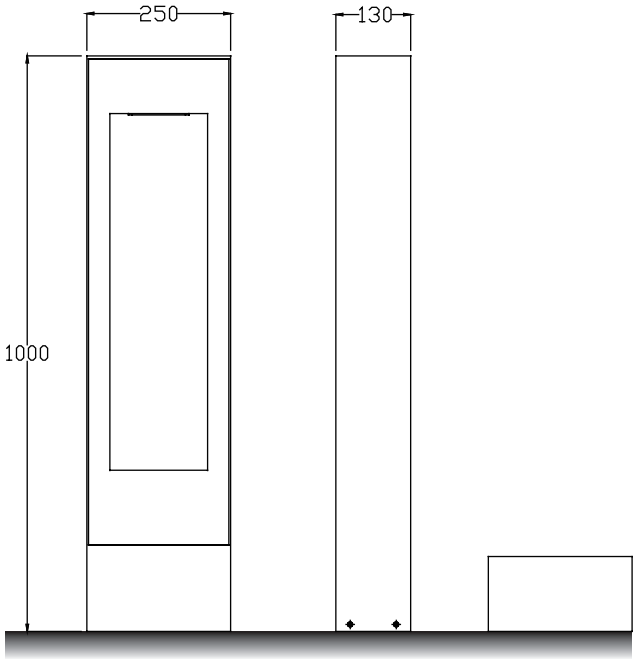

Installation plate

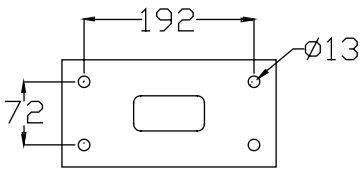

DM-SE74a

Colo(u)r temperature

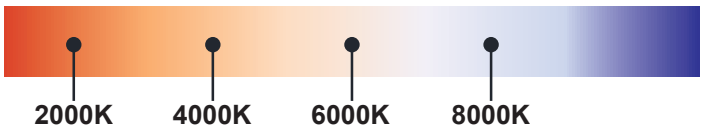

Bollard light

IP65

Rated power	12W	Power Factor	> 0.9
LED Quantity	1pcs	Life	> 50000H
Color Temperature	6000k/4000k/3000k	THD	< 15%
Luminous Flux	1100lm	Frequency Range	50/60HZ
Input Voltage	AC100~277V	Lnstallation Pipe Diameter	/
Protection Grade	IP65	CRI	> 90
Operating Temperature	-30~50℃		

DM-SE74a

Standard colours

9004 9006 9007 9016

Bollard light

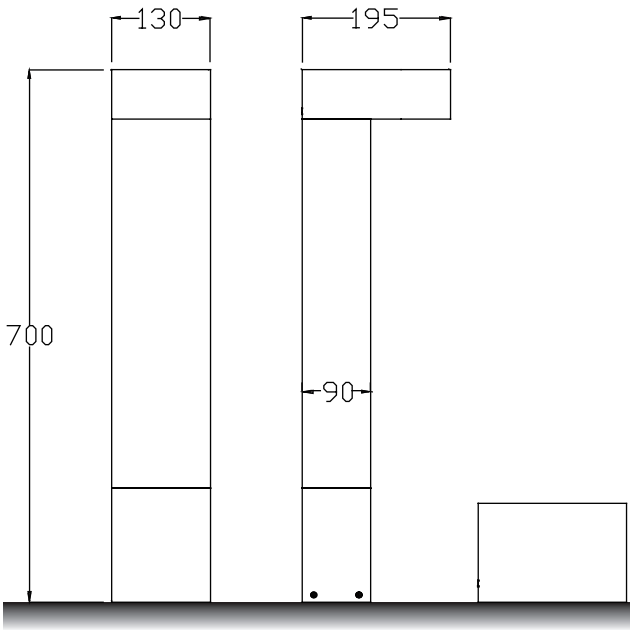

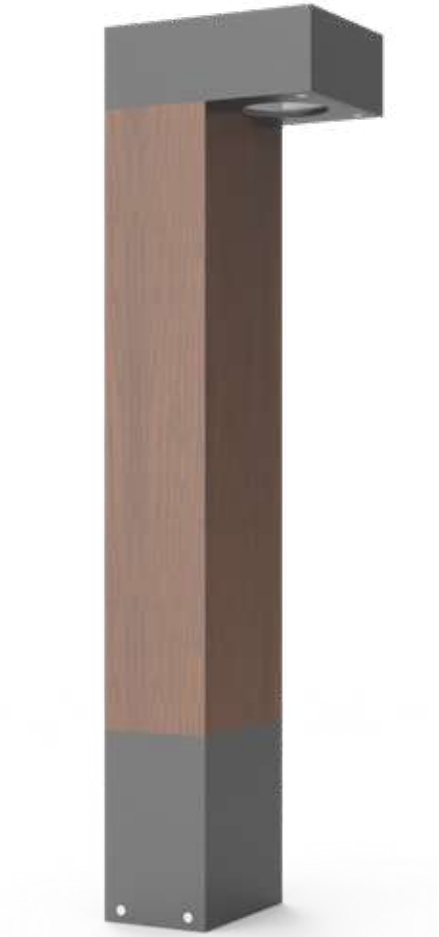

Installation plate

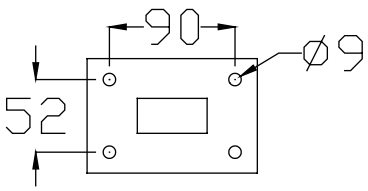

DM-SE75a

Colo(u)r temperature

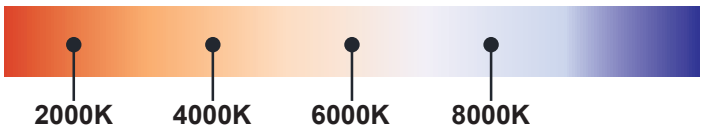

Bollard light

IP65

Rated power	12W	Power Factor	> 0.9
LED Quantity	1pcs	Life	> 50000H
Color Temperature	6000k/4000k/3000k	THD	< 15%
Luminous Flux	1100lm	Frequency Range	50/60HZ
Input Voltage	AC100~277V	Lnstallation Pipe Diameter	/
Protection Grade	IP65	CRI	> 90
Operating Temperature	-30~50℃		

DM-SE75a

Standard colours

9004 9006 9007 9016

Bollard light

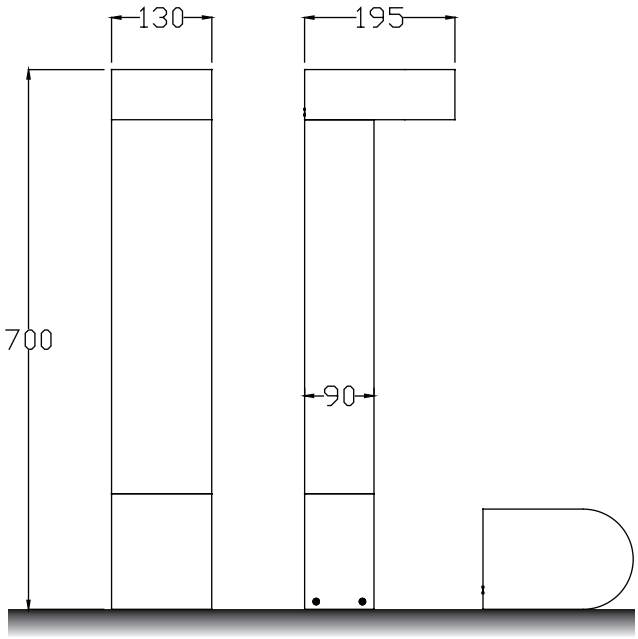

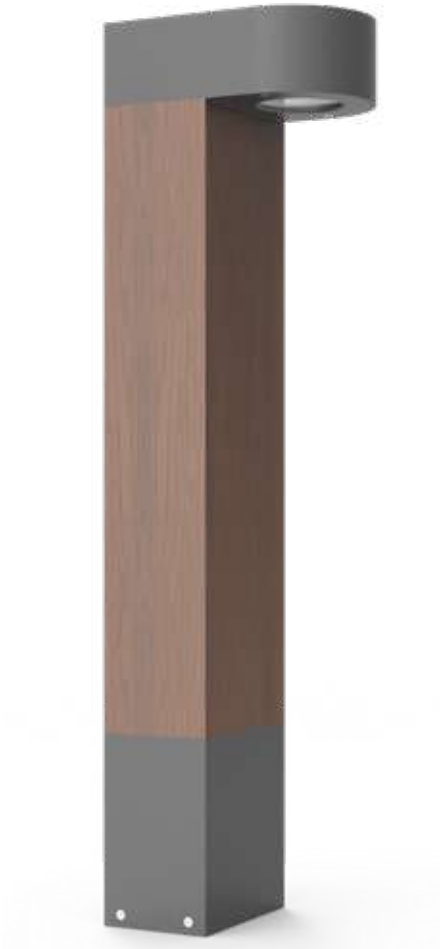

Installation plate

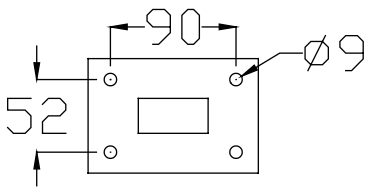

DM-SE76a

Colo(u)r temperature

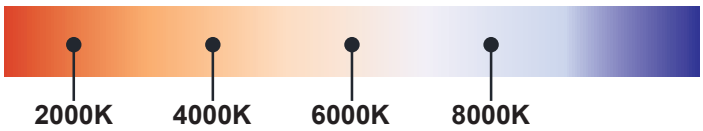

Bollard light

IP65

Rated power	12W	Power Factor	> 0.9
LED Quantity	1pcs	Life	> 50000H
Color Temperature	6000k/4000k/3000k	THD	< 15%
Luminous Flux	1100lm	Frequency Range	50/60HZ
Input Voltage	AC100~277V	Lnstallation Pipe Diameter	/
Protection Grade	IP65	CRI	> 90
Operating Temperature	-30~50℃		

DM-SE76a

Standard colours

9004 9006 9007 9016

Bollard light

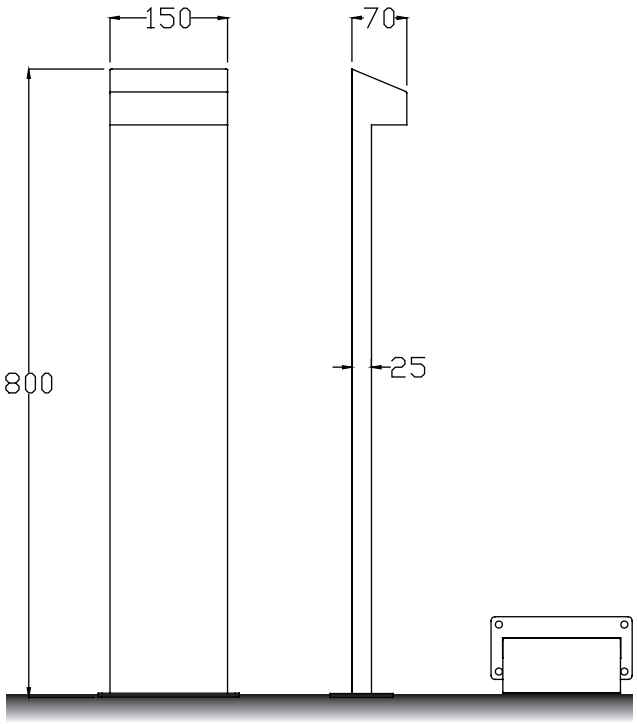

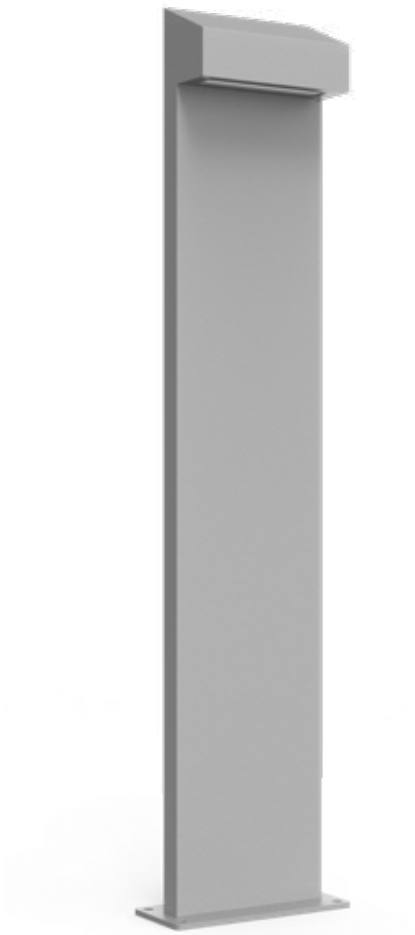

Installation plate

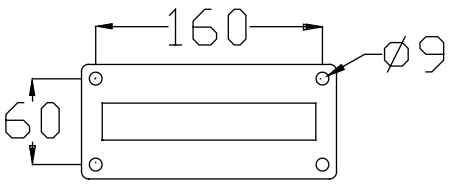

DM-SE77a

Colo(u)r temperature

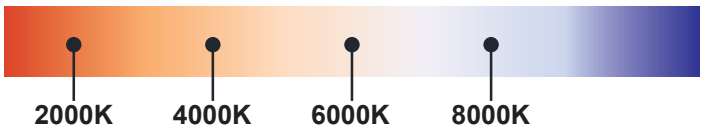

Bollard light

IP65

Rated power	12W	Power Factor	> 0.9
LED Quantity	1pcs	Life	> 50000H
Color Temperature	6000k/4000k/3000k	THD	< 15%
Luminous Flux	1100lm	Frequency Range	50/60HZ
Input Voltage	AC100~277V	Lnstallation Pipe Diameter	/
Protection Grade	IP65	CRI	> 90
Operating Temperature	-30~50℃		

DM-SE77a

Standard colours

9004 9006 9007 9016

Bollard light

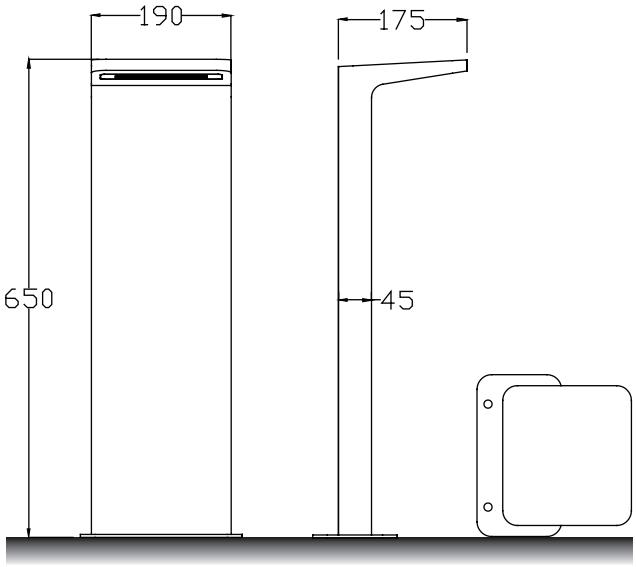

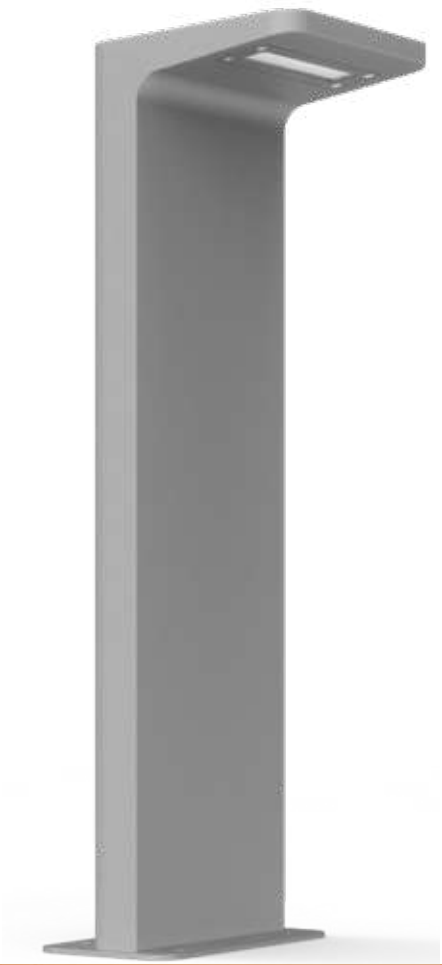

Installation plate

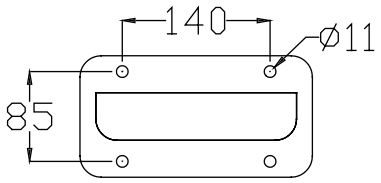

DM-SE78a

Colo(u)r temperature

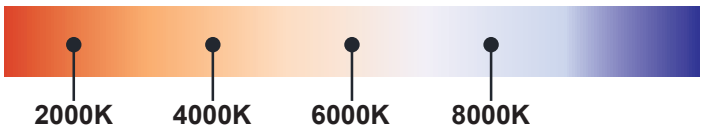

Bollard light

IP65

Rated power	12W	Power Factor	> 0.9
LED Quantity	1pcs	Life	> 50000H
Color Temperature	6000k/4000k/3000k	THD	< 15%
Luminous Flux	1100lm	Frequency Range	50/60HZ
Input Voltage	AC100~277V	Lnstallation Pipe Diameter	/
Protection Grade	IP65	CRI	> 90
Operating Temperature	-30~50℃		

DM-SE78a

Standard colours

9004 9006 9007 9016

Bollard light

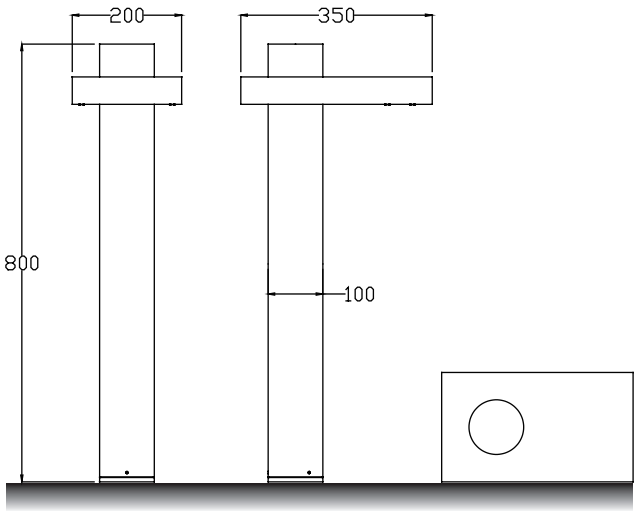

Installation plate

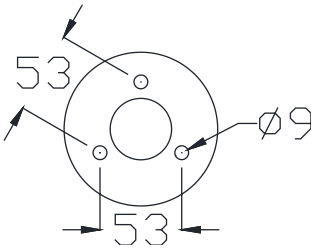

DM-SE79a

Colo(u)r temperature

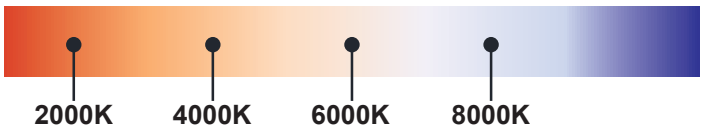

Bollard light

IP65

Rated power	12W	Power Factor	> 0.9
LED Quantity	1pcs	Life	> 50000H
Color Temperature	6000k/4000k/3000k	THD	< 15%
Luminous Flux	1100lm	Frequency Range	50/60HZ
Input Voltage	AC100~277V	Lnstallation Pipe Diameter	/
Protection Grade	IP65	CRI	> 90
Operating Temperature	-30~50℃		

DM-SE79a

Standard colours

9004 9006 9007 9016

Bollard light

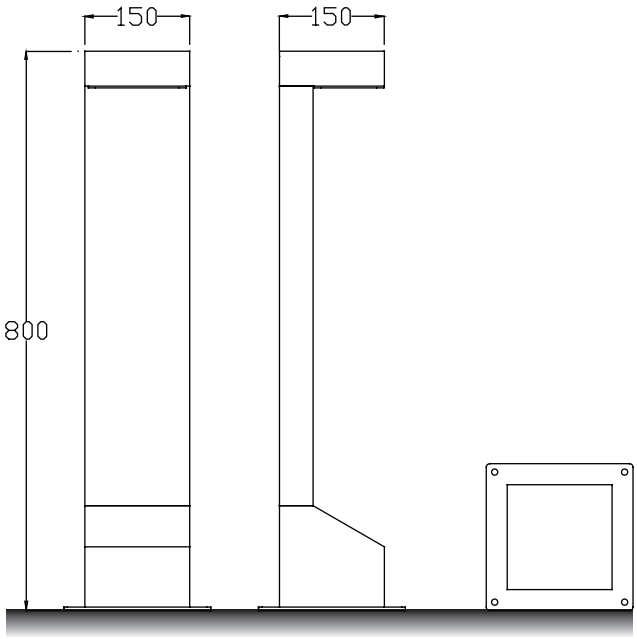

Installation plate

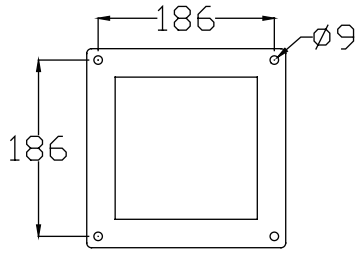

DM-SE80a

Colo(u)r temperature

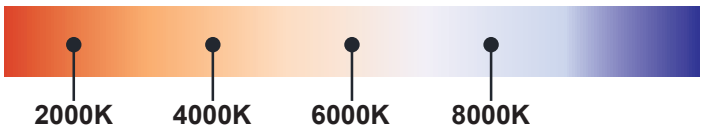

Bollard light

IP65

Rated power	12W	Power Factor	> 0.9
LED Quantity	1pcs	Life	> 50000H
Color Temperature	6000k/4000k/3000k	THD	< 15%
Luminous Flux	1100lm	Frequency Range	50/60HZ
Input Voltage	AC100~277V	Lnstallation Pipe Diameter	/
Protection Grade	IP65	CRI	> 90
Operating Temperature	-30~50℃		

DM-SE80a

Standard colours

9004 9006 9007 9016

Bollard light

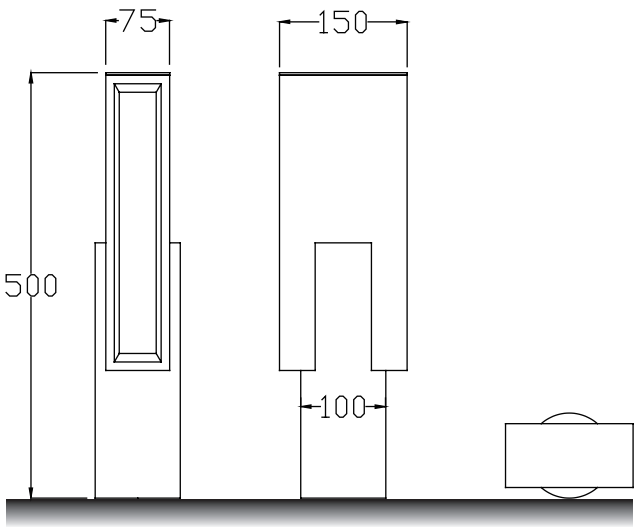

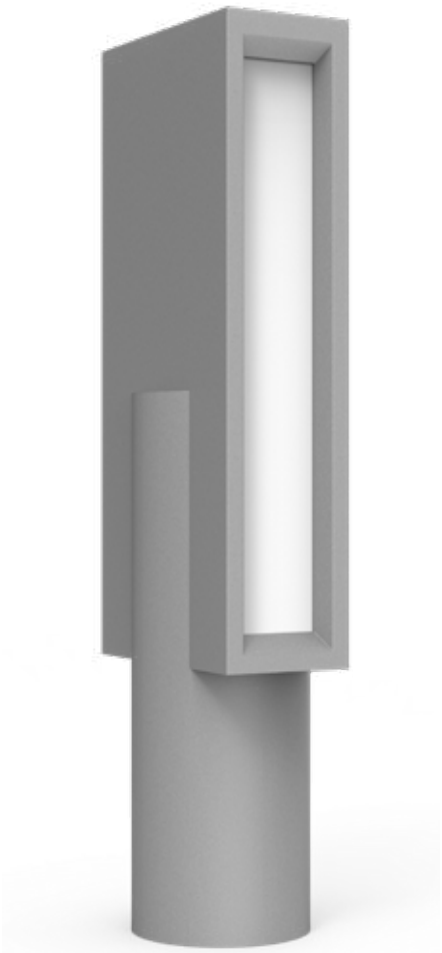

Installation plate

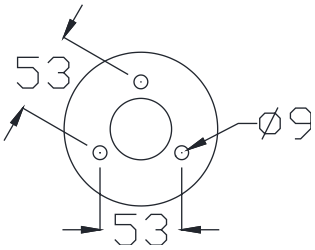

DM-SE81a

Colo(u)r temperature

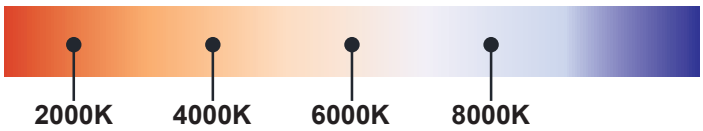

Bollard light

IP65

Rated power	12W	Power Factor	> 0.9
LED Quantity	1pcs	Life	> 50000H
Color Temperature	6000k/4000k/3000k	THD	< 15%
Luminous Flux	1100lm	Frequency Range	50/60HZ
Input Voltage	AC100~277V	Lnstallation Pipe Diameter	/
Protection Grade	IP65	CRI	> 90
Operating Temperature	-30~50℃		

DM-SE81a

Standard colours

9004 9006 9007 9016

Bollard light

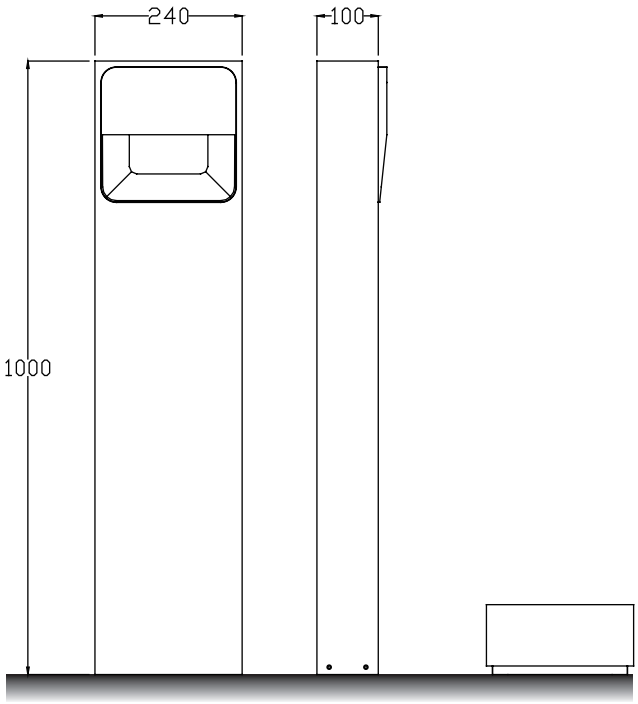

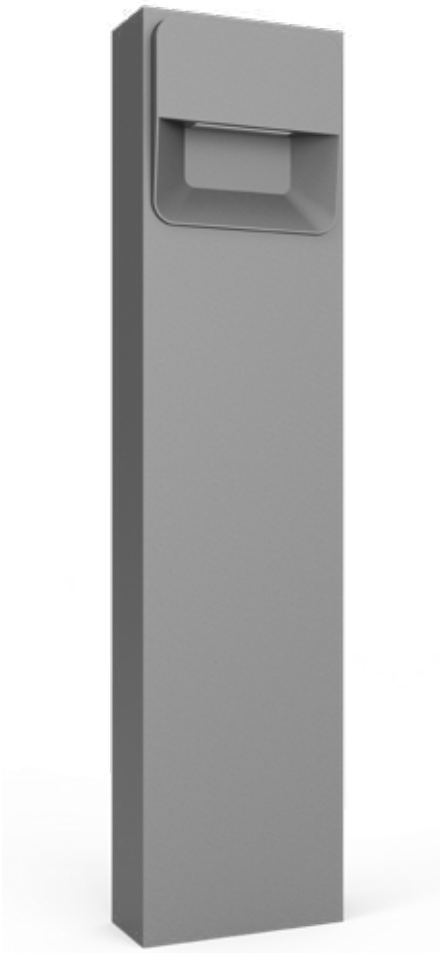

Installation plate

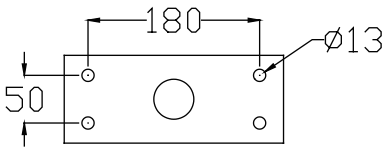

DM-SE82a

Colo(u)r temperature

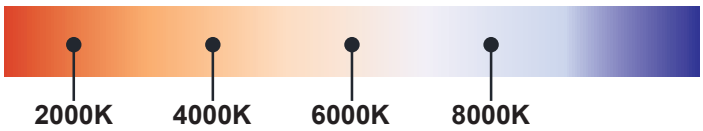

Bollard light

IP65

Rated power	12W	Power Factor	> 0.9
LED Quantity	1pcs	Life	> 50000H
Color Temperature	6000k/4000k/3000k	THD	< 15%
Luminous Flux	1100lm	Frequency Range	50/60HZ
Input Voltage	AC100~277V	Lnstallation Pipe Diameter	/
Protection Grade	IP65	CRI	> 90
Operating Temperature	-30~50℃		

DM-SE82a

Standard colours

9004 9006 9007 9016

Bollard light

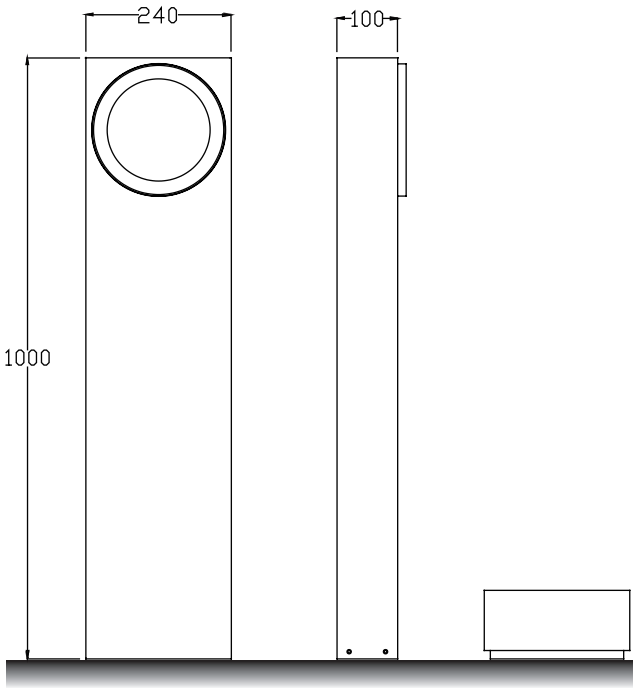

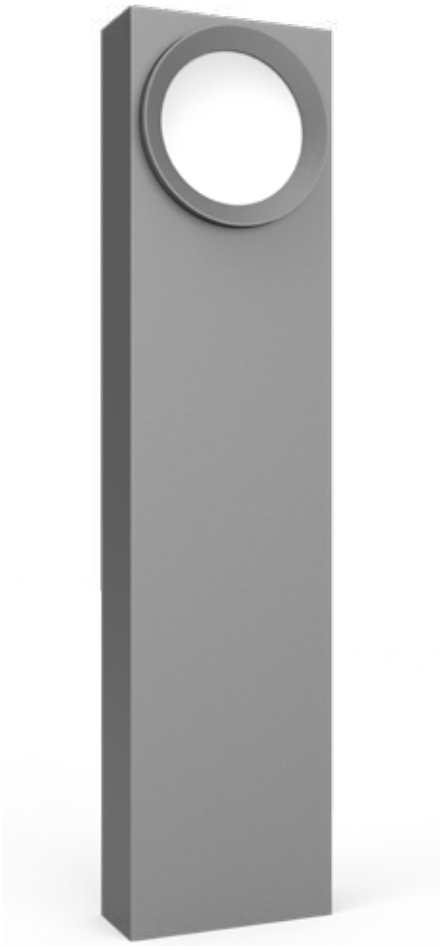

Installation plate

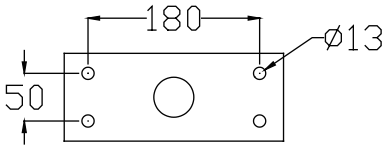

DM-SE83a

Colo(u)r temperature

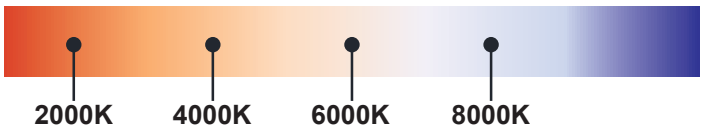

Bollard light

IP65

Rated power	12W	Power Factor	> 0.9
LED Quantity	1pcs	Life	> 50000H
Color Temperature	6000k/4000k/3000k	THD	< 15%
Luminous Flux	1100lm	Frequency Range	50/60HZ
Input Voltage	AC100~277V	Lnstallation Pipe Diameter	/
Protection Grade	IP65	CRI	> 90
Operating Temperature	-30~50℃		

DM-SE83a

Standard colours

9004 9006 9007 9016

Bollard light

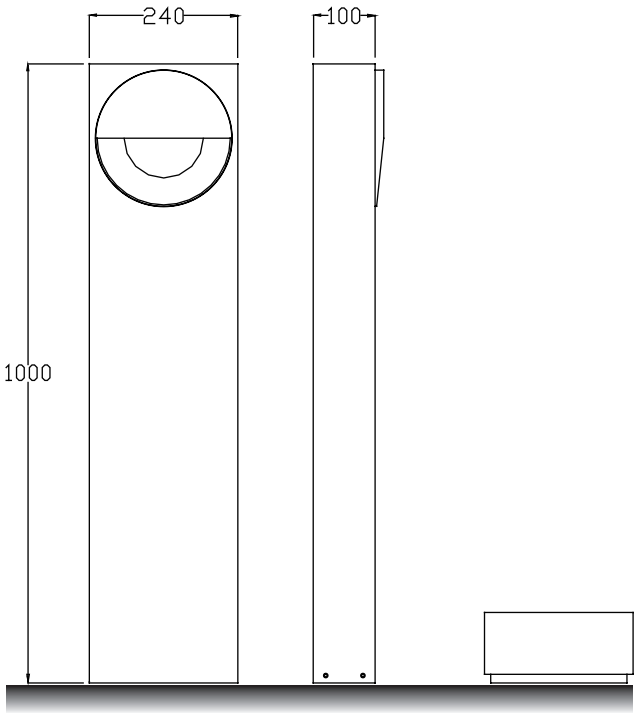

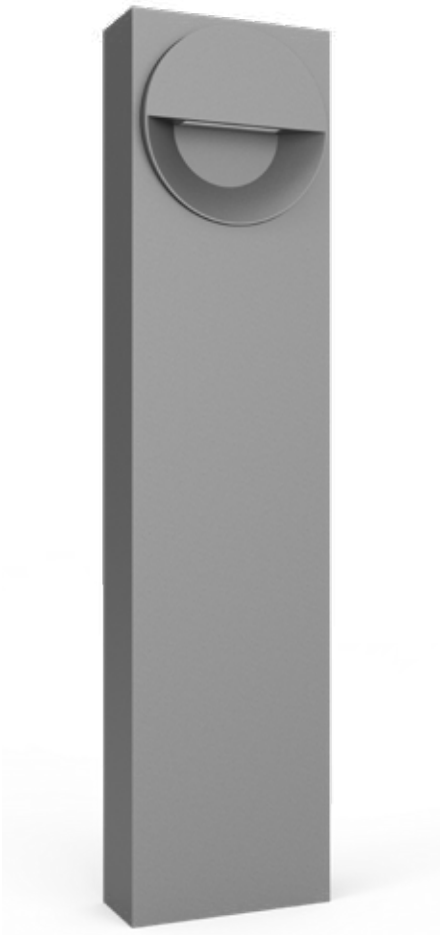

Installation plate

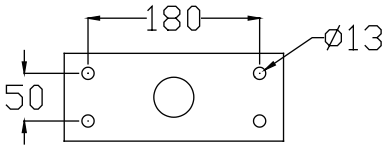

DM-SE84a

Colo(u)r temperature

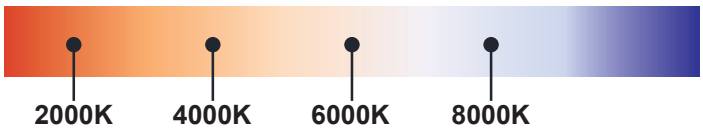

Bollard light

IP65

Rated power	12W	Power Factor	> 0.9
LED Quantity	1pcs	Life	> 50000H
Color Temperature	6000k/4000k/3000k	THD	< 15%
Luminous Flux	1100lm	Frequency Range	50/60HZ
Input Voltage	AC100~277V	Lnstallation Pipe Diameter	/
Protection Grade	IP65	CRI	> 90
Operating Temperature	-30~50℃		

DM-SE84a

Standard colours

9004 9006 9007 9016

Bollard light

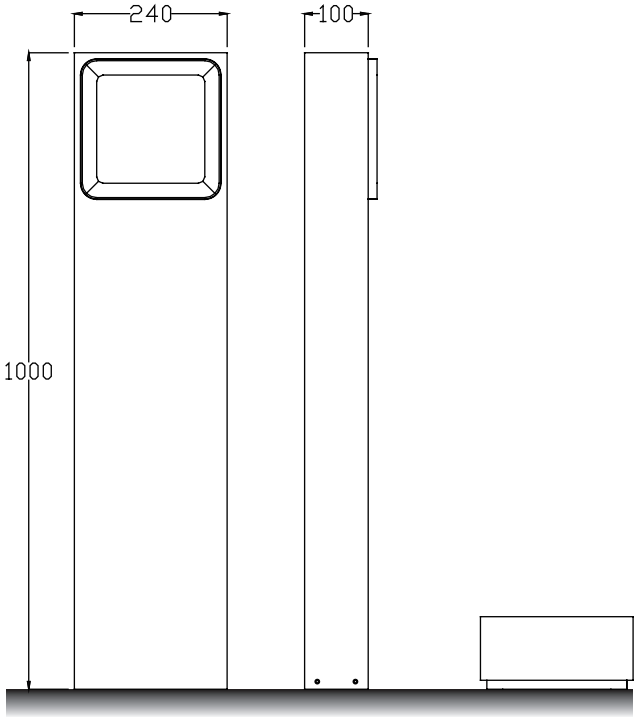

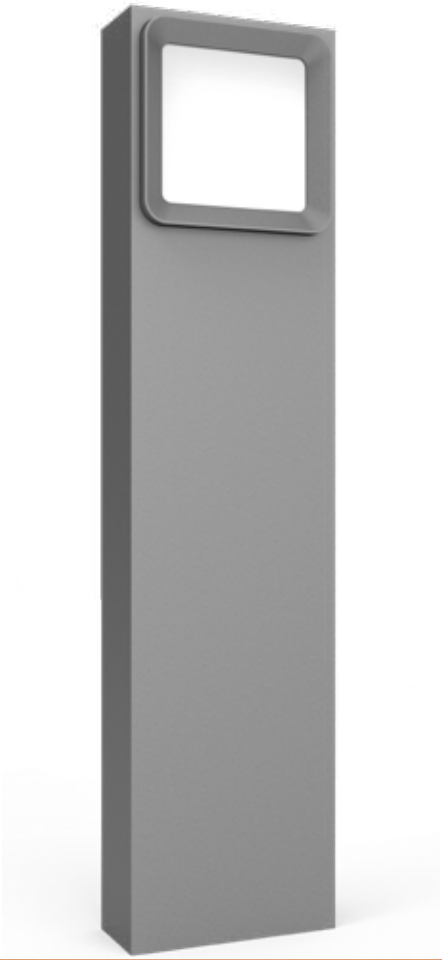

Installation plate

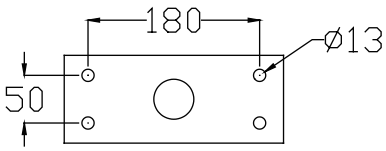

DM-SE85a

Colo(u)r temperature

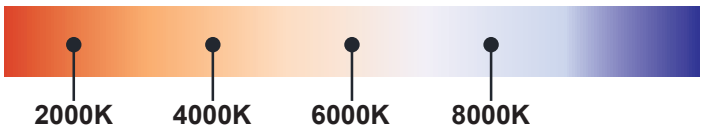

Bollard light

IP65

Rated power	12W	Power Factor	> 0.9
LED Quantity	1pcs	Life	> 50000H
Color Temperature	6000k/4000k/3000k	THD	< 15%
Luminous Flux	1100lm	Frequency Range	50/60HZ
Input Voltage	AC100~277V	Lnstallation Pipe Diameter	/
Protection Grade	IP65	CRI	> 90
Operating Temperature	-30~50℃		

DM-SE85a

Standard colours

9004 9006 9007 9016

Bollard light

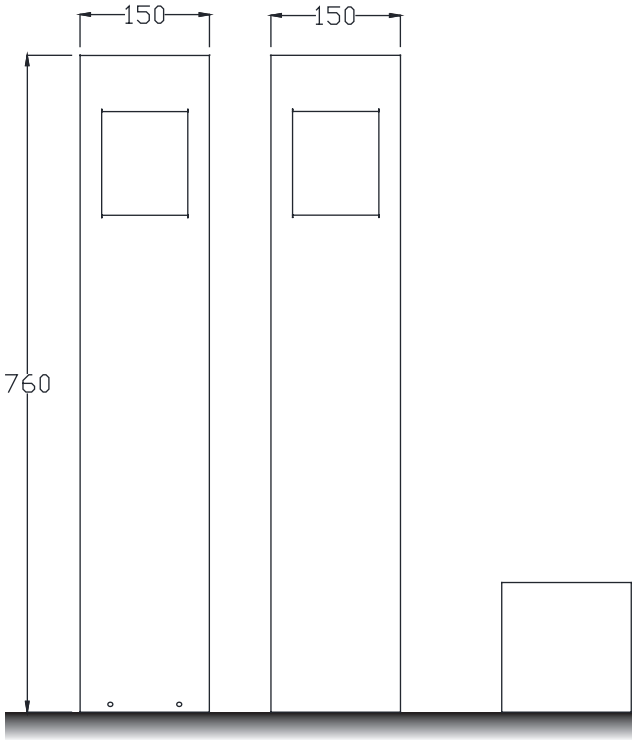

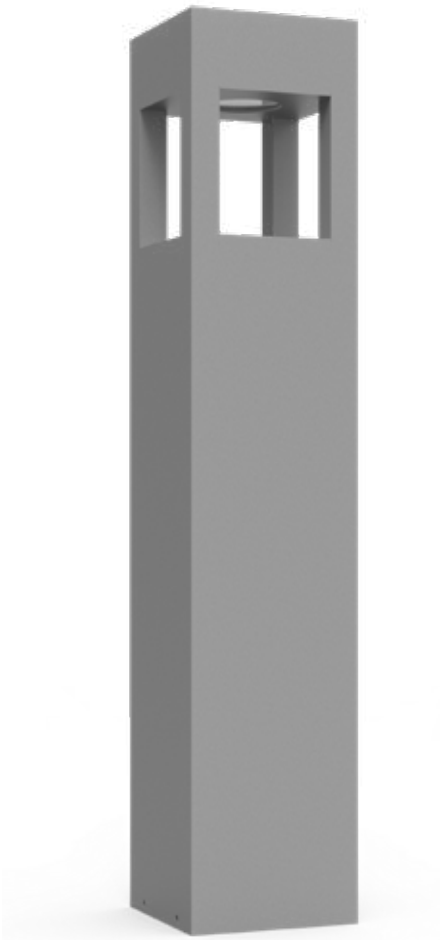

Installation plate

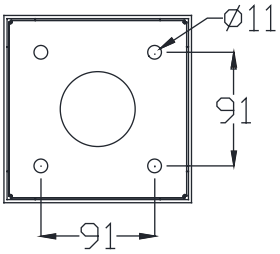

DM-SE86a

Colo(u)r temperature

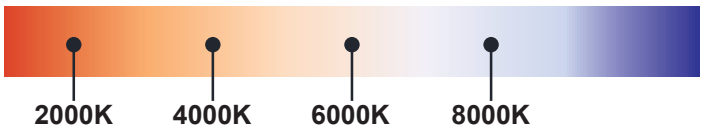

Bollard light

IP65

Rated power	12W	Power Factor	> 0.9
LED Quantity	1pcs	Life	> 50000H
Color Temperature	6000k/4000k/3000k	THD	< 15%
Luminous Flux	1100lm	Frequency Range	50/60HZ
Input Voltage	AC100~277V	Lnstallation Pipe Diameter	/
Protection Grade	IP65	CRI	> 90
Operating Temperature	-30~50℃		

DM-SE86a

Standard colours

9004 9006 9007 9016

Bollard light

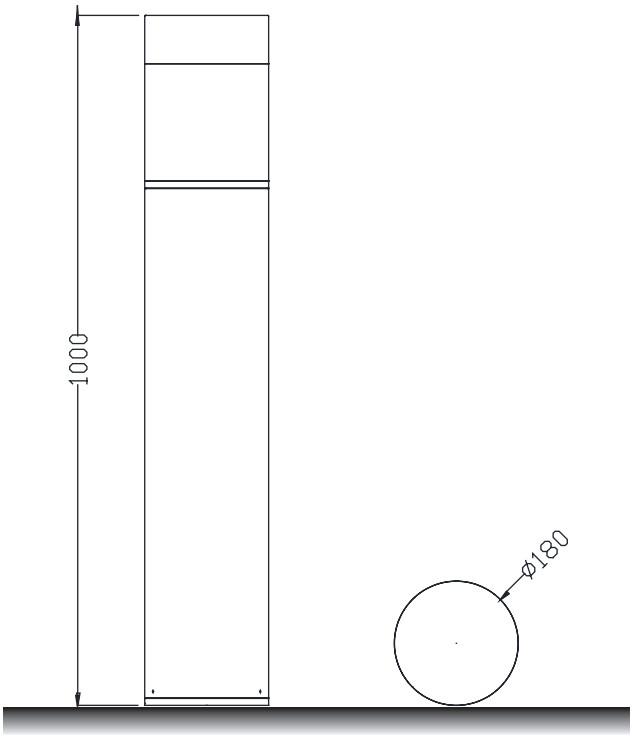

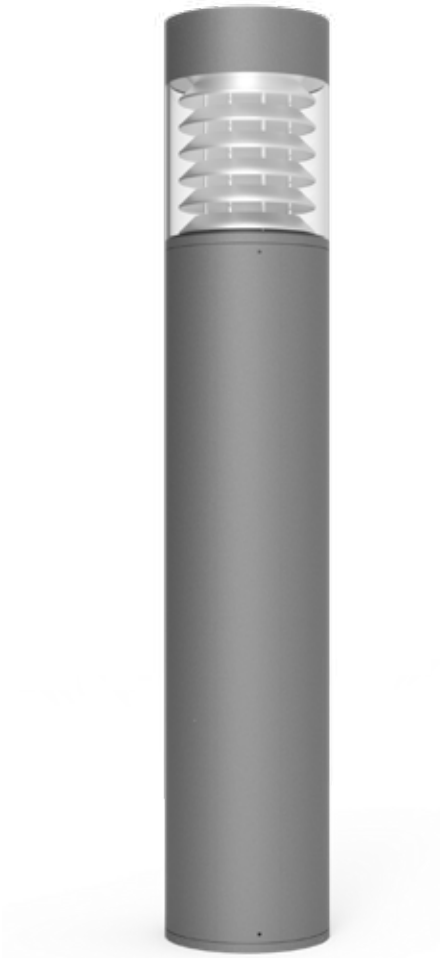

Installation plate

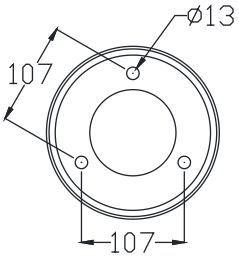

DM-CR1a

Colo(u)r temperature

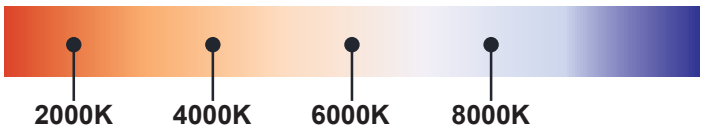

Bollard light

IP65

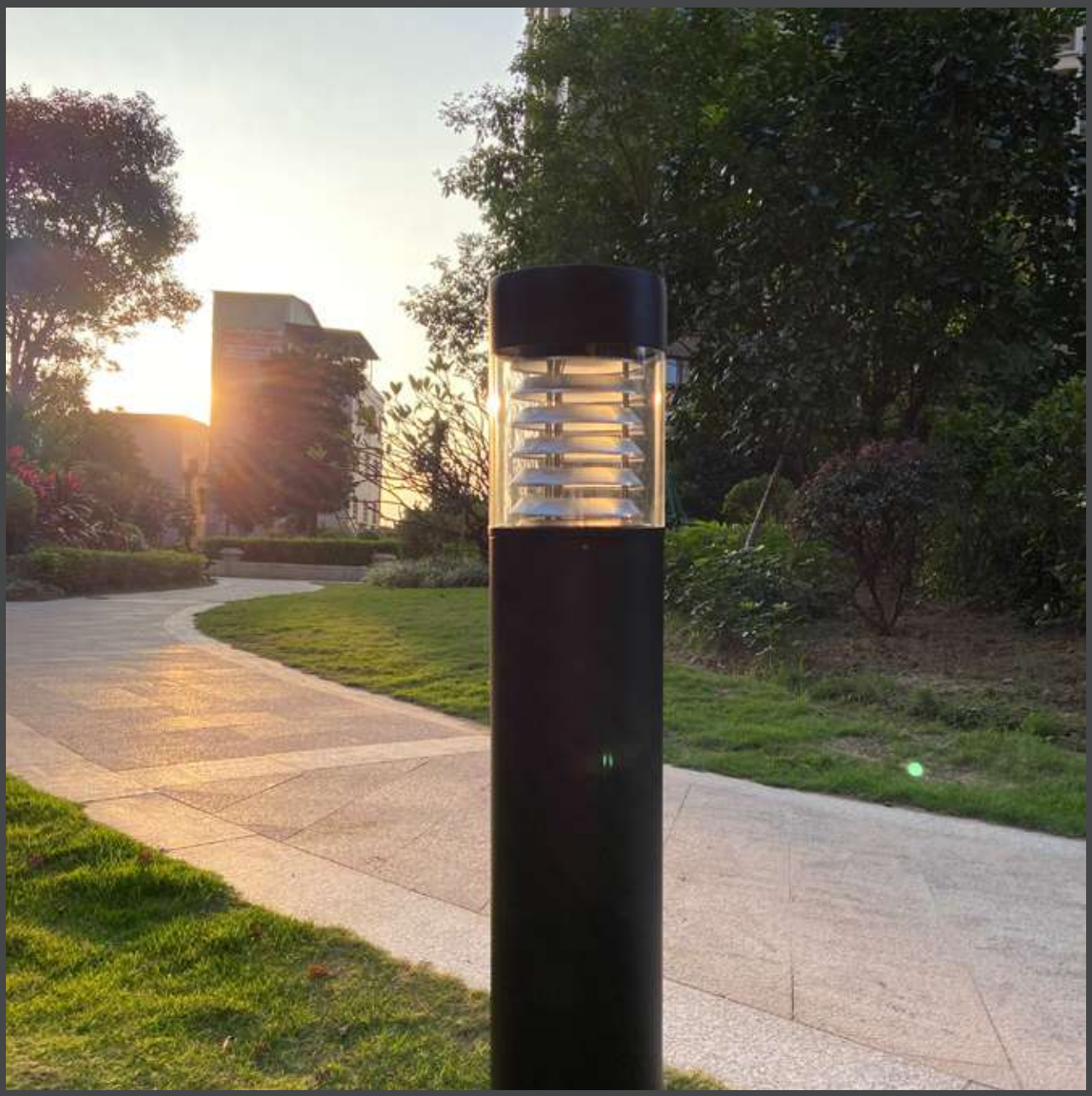

Rated power	12W	Power Factor	> 0.9
LED Quantity	12pcs	Life	> 50000H
Color Temperature	6000k/4000k/3000k	THD	< 15%
Luminous Flux	1100lm	Frequency Range	50/60HZ
Input Voltage	AC100~277V	Lnstallation Pipe Diameter	/
Protection Grade	IP65	CRI	> 90
Operating Temperature	-30~50℃		

DM-CR1a

Standard colours

9004 9006 9007 9016

Bollard light

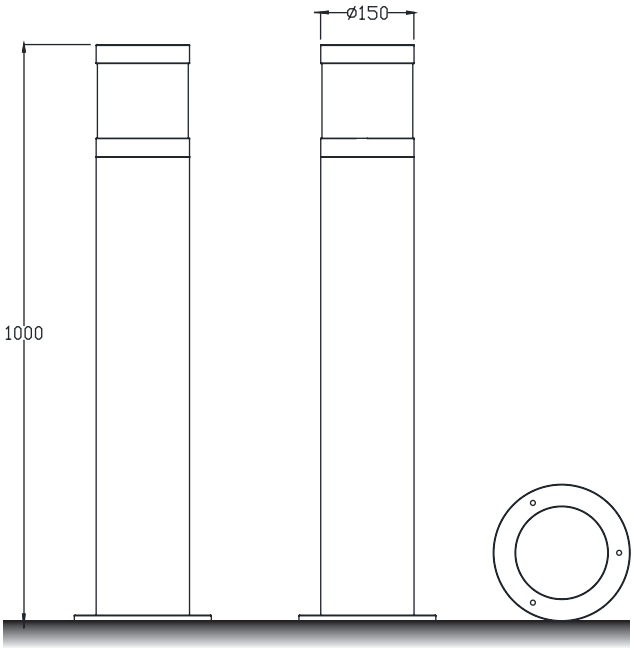

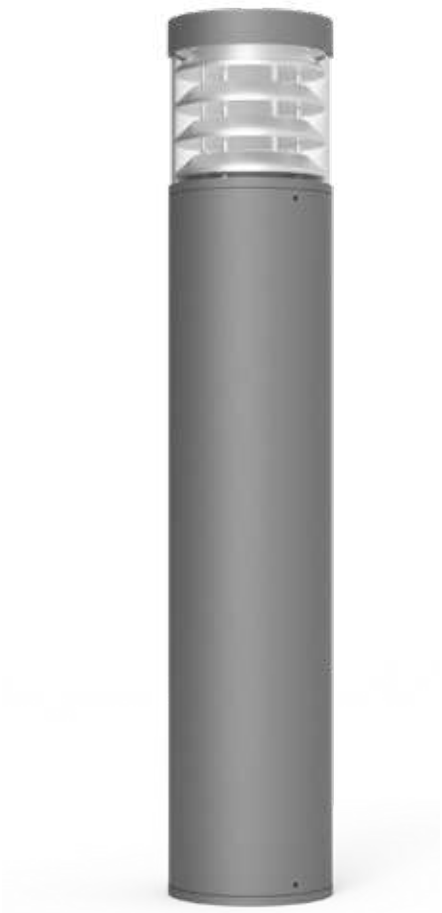

Installation plate

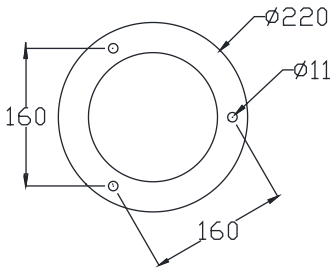

DM-CR2a

Colo(u)r temperature

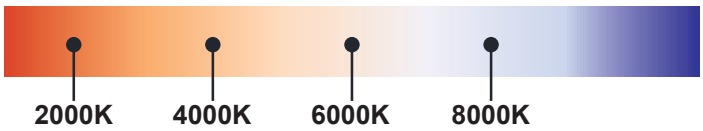

Bollard light

IP65

Rated power	12W	Power Factor	> 0.9
LED Quantity	12pcs	Life	> 50000H
Color Temperature	6000k/4000k/3000k	THD	< 15%
Luminous Flux	1100lm	Frequency Range	50/60HZ
Input Voltage	AC100~277V	Lnstallation Pipe Diameter	/
Protection Grade	IP65	CRI	> 90
Operating Temperature	-30~50℃		

DM-CR2a

Standard colours

9004 9006 9007 9016

Bollard light

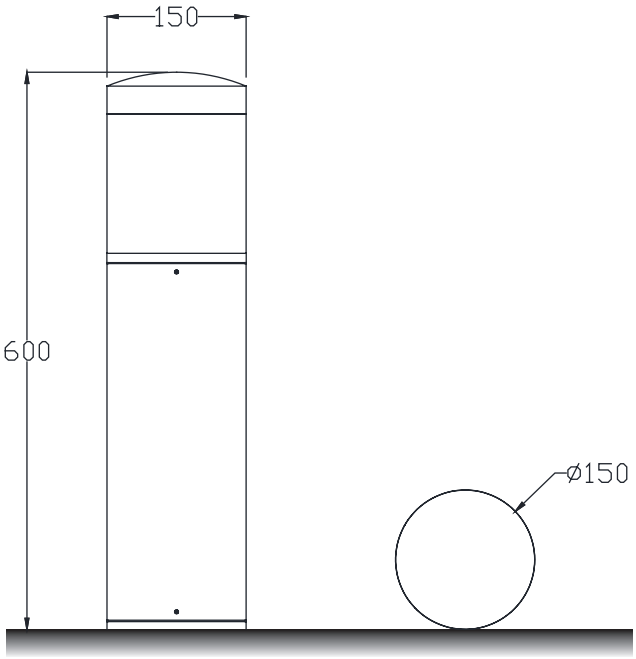

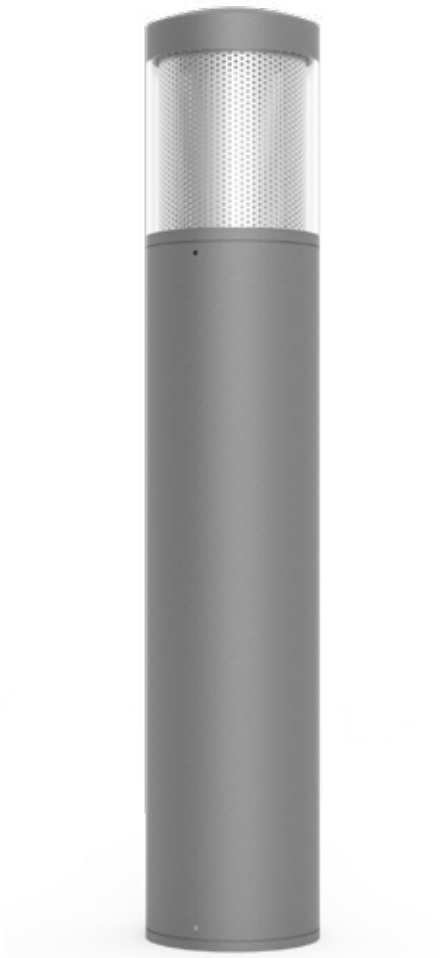

Installation plate

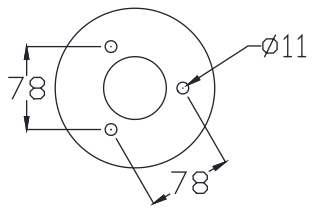

DM-CR3a

Colo(u)r temperature

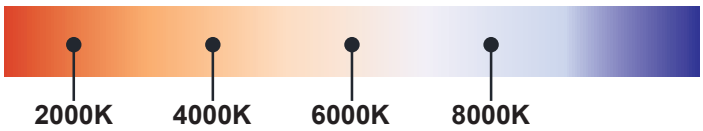

Bollard light

IP65

Rated power	12W	Power Factor	> 0.9
LED Quantity	12pcs	Life	> 50000H
Color Temperature	6000k/4000k/3000k	THD	< 15%
Luminous Flux	1100lm	Frequency Range	50/60HZ
Input Voltage	AC100~277V	Lnstallation Pipe Diameter	/
Protection Grade	IP65	CRI	> 90
Operating Temperature	-30~50℃		

DM-CR3a

Standard colours

9004 9006 9007 9016

Bollard light

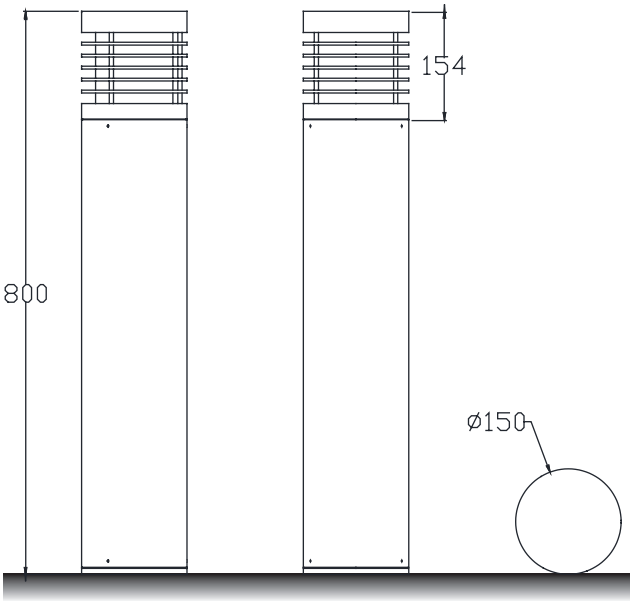

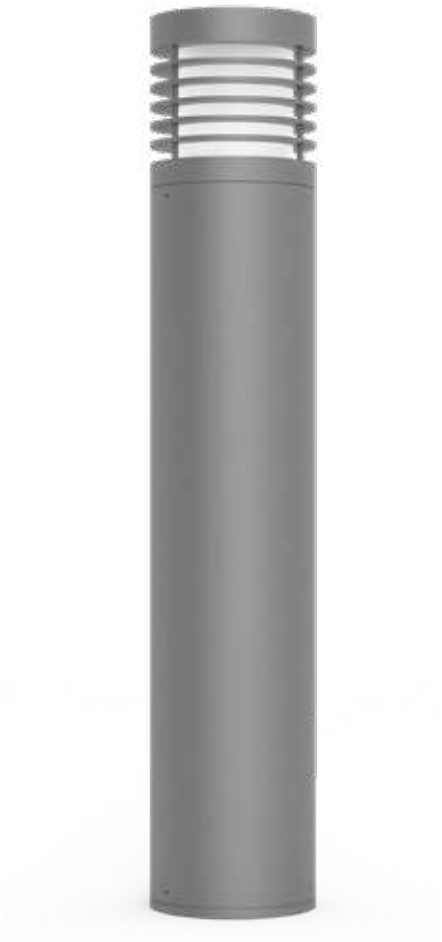

Installation plate

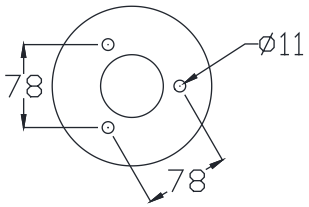

DM-CR4a

Colo(u)r temperature

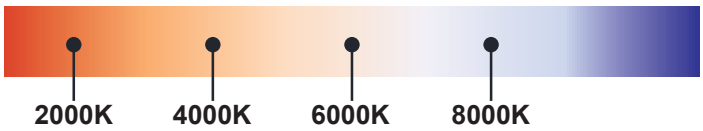

Bollard light

IP65

Rated power	12W	Power Factor	> 0.9
LED Quantity	12pcs	Life	> 50000H
Color Temperature	6000k/4000k/3000k	THD	< 15%
Luminous Flux	1100lm	Frequency Range	50/60HZ
Input Voltage	AC100~277V	Lnstallation Pipe Diameter	/
Protection Grade	IP65	CRI	> 90
Operating Temperature	-30~50℃		

DM-CR4a

Standard colours

9004 9006 9007 9016

Bollard light

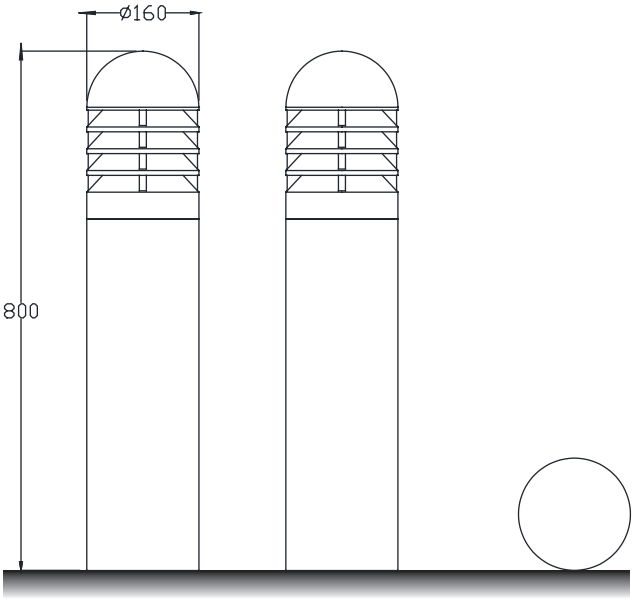

Installation plate

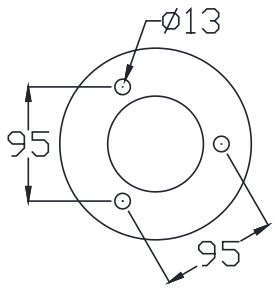

DM-CR5a

Colo(u)r temperature

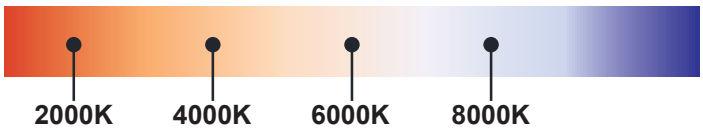

Bollard light

IP65

Rated power	12W	Power Factor	> 0.9
LED Quantity	12pcs	Life	> 50000H
Color Temperature	6000k/4000k/3000k	THD	< 15%
Luminous Flux	1100lm	Frequency Range	50/60HZ
Input Voltage	AC100~277V	Lnstallation Pipe Diameter	/
Protection Grade	IP65	CRI	> 90
Operating Temperature	-30~50℃		

DM-CR5a

Standard colours

9004 9006 9007 9016

Bollard light

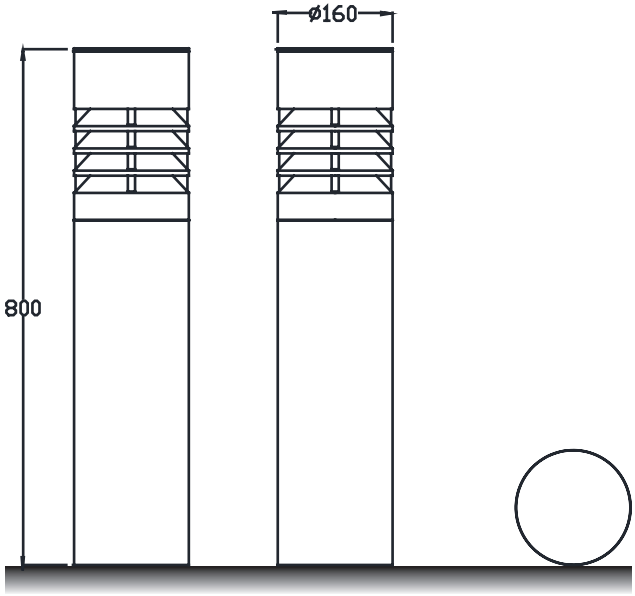

Installation plate

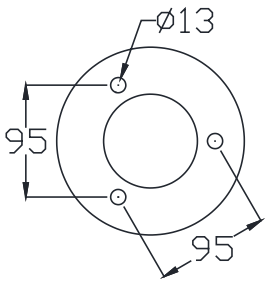

DM-CR6a

Colo(u)r temperature

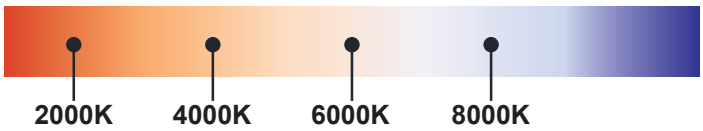

Bollard light

IP65

Rated power	12W	Power Factor	> 0.9
LED Quantity	12pcs	Life	> 50000H
Color Temperature	6000k/4000k/3000k	THD	< 15%
Luminous Flux	1100lm	Frequency Range	50/60HZ
Input Voltage	AC100~277V	Lnstallation Pipe Diameter	/
Protection Grade	IP65	CRI	> 90
Operating Temperature	-30~50℃		

DM-CR6a

Standard colours

9004 9006 9007 9016

Bollard light

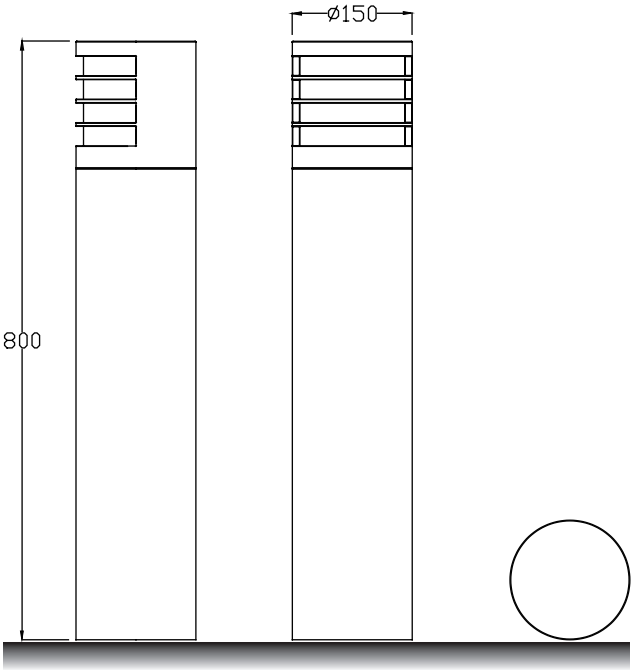

Installation plate

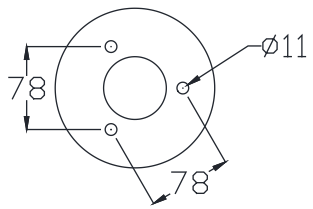

DM-CR7a

Colo(u)r temperature

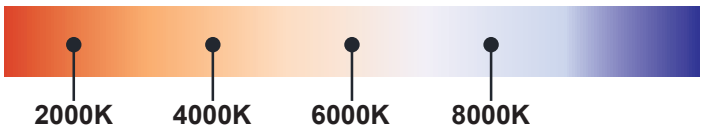

Bollard light

IP65

Rated power	12W	Power Factor	> 0.9
LED Quantity	12pcs	Life	> 50000H
Color Temperature	6000k/4000k/3000k	THD	< 15%
Luminous Flux	1100lm	Frequency Range	50/60HZ
Input Voltage	AC100~277V	Lnstallation Pipe Diameter	/
Protection Grade	IP65	CRI	> 90
Operating Temperature	-30~50℃		

DM-CR7a

Standard colours

9004 9006 9007 9016

Bollard light

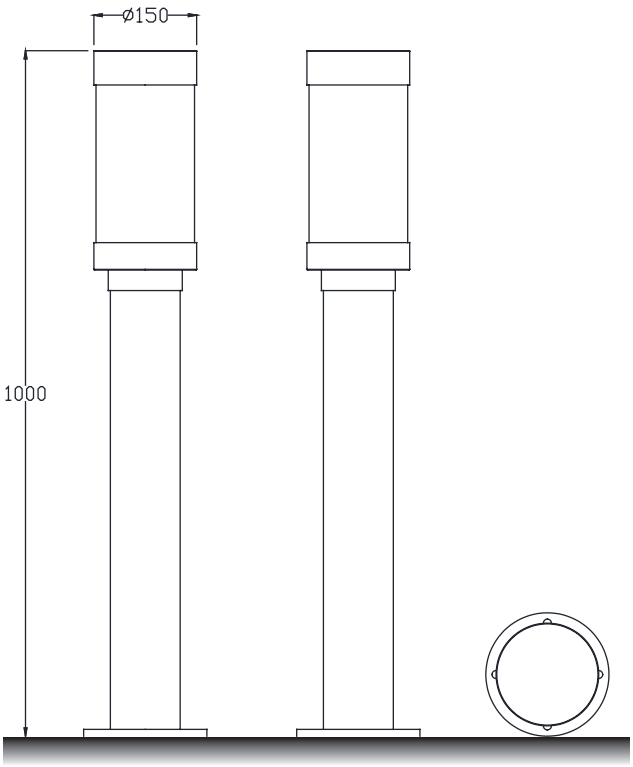

Installation plate

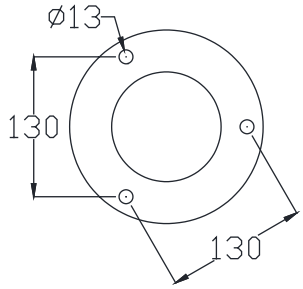

DM-CR8a

Colo(u)r temperature

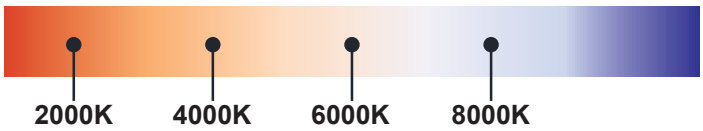

Bollard light

IP65

Rated power	12W	Power Factor	> 0.9
LED Quantity	12pcs	Life	> 50000H
Color Temperature	6000k/4000k/3000k	THD	< 15%
Luminous Flux	1100lm	Frequency Range	50/60HZ
Input Voltage	AC100~277V	Lnstallation Pipe Diameter	/
Protection Grade	IP65	CRI	> 90
Operating Temperature	-30~50℃		

DM-CR8a

Standard colours

9004 9006 9007 9016

Bollard light

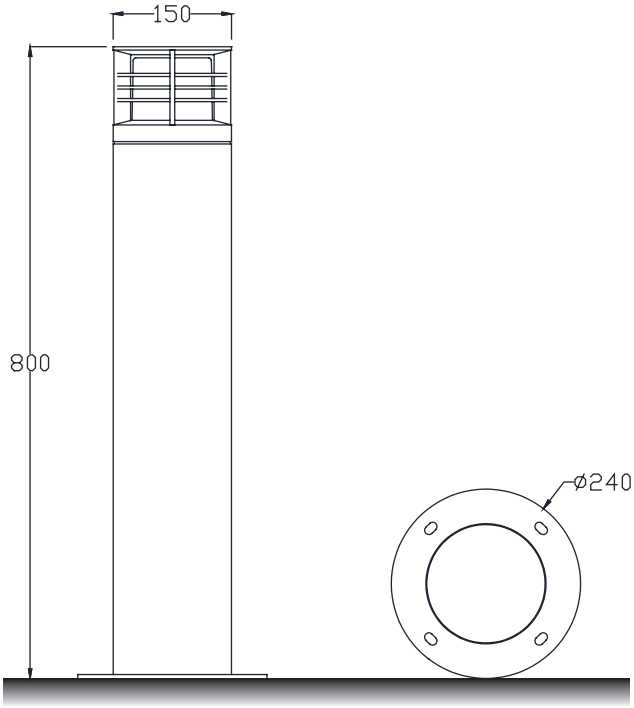

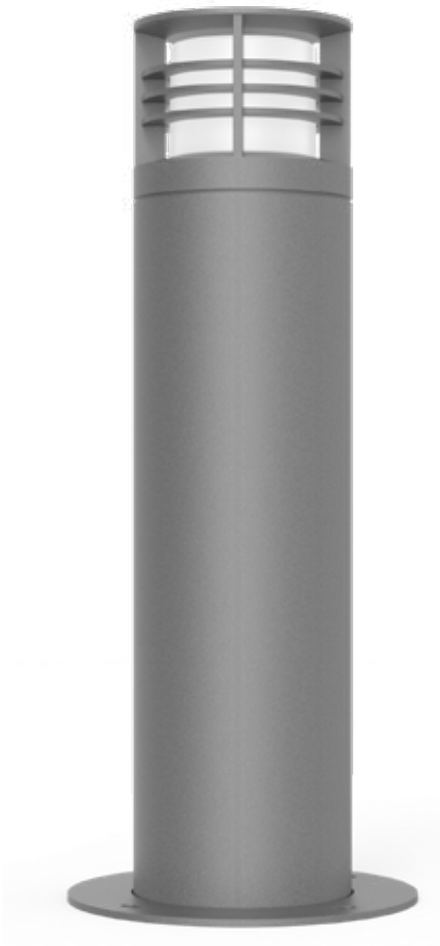

Installation plate

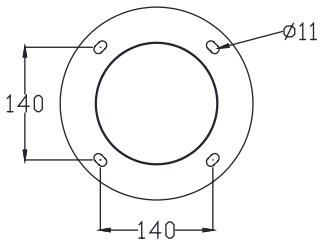

DM-CR9a

Colo(u)r temperature

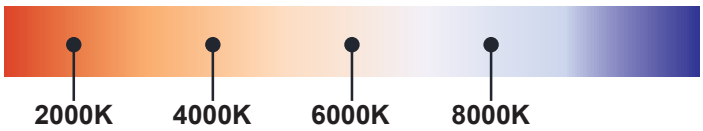

Bollard light

IP65

Rated power	12W	Power Factor	> 0.9
LED Quantity	12pcs	Life	> 50000H
Color Temperature	6000k/4000k/3000k	THD	< 15%
Luminous Flux	1100lm	Frequency Range	50/60HZ
Input Voltage	AC100~277V	Lnstallation Pipe Diameter	/
Protection Grade	IP65	CRI	> 90
Operating Temperature	-30~50℃		

DM-CR9a

Standard colours

9004 9006 9007 9016

Bollard light

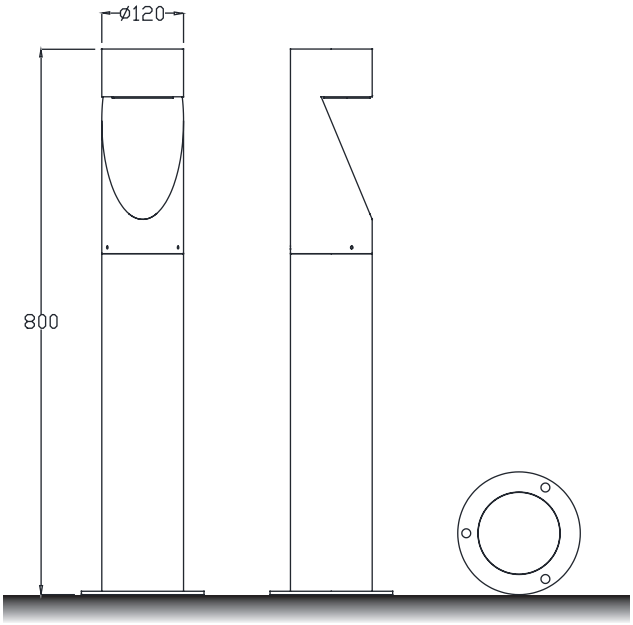

Installation plate

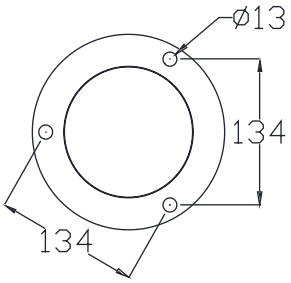

DM-CR10a

Colo(u)r temperature

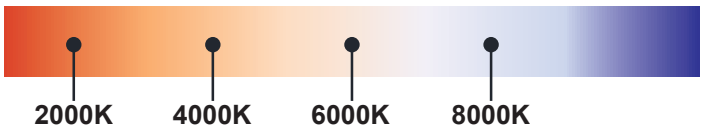

Bollard light

IP65

Rated power	12W	Power Factor	> 0.9
LED Quantity	12pcs	Life	> 50000H
Color Temperature	6000k/4000k/3000k	THD	< 15%
Luminous Flux	1100lm	Frequency Range	50/60HZ
Input Voltage	AC100~277V	Lnstallation Pipe Diameter	/
Protection Grade	IP65	CRI	> 90
Operating Temperature	-30~50℃		

DM-CR10a

Standard colours

9004 9006 9007 9016

Bollard light

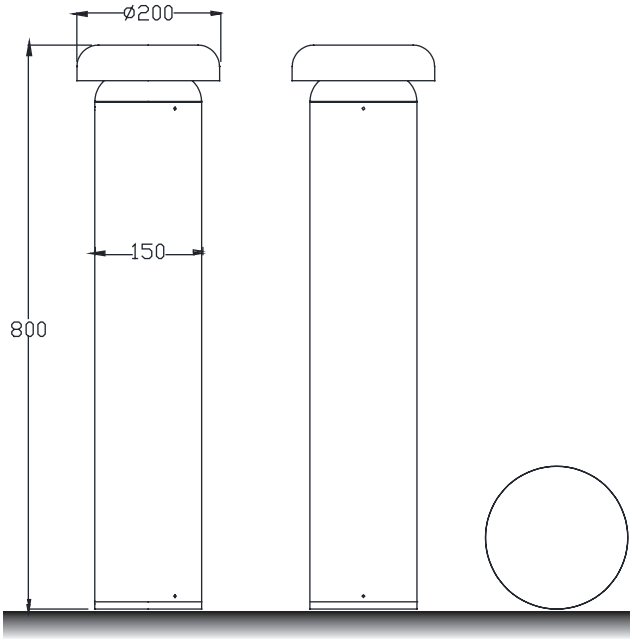

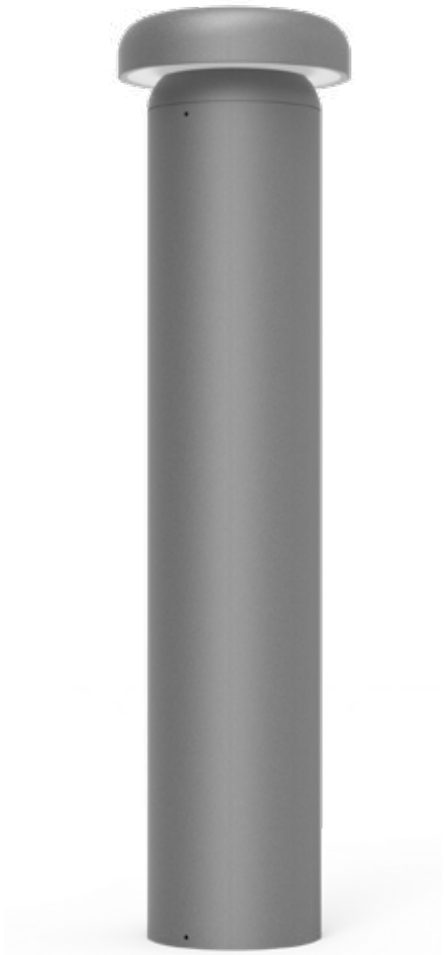

Installation plate

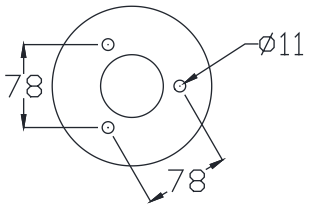

DM-CR11a

Colo(u)r temperature

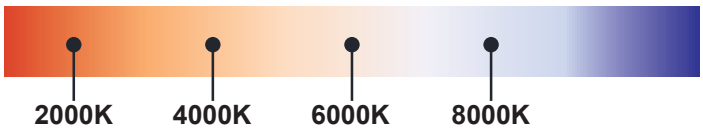

Bollard light

IP65

Rated power	12W	Power Factor	> 0.9
LED Quantity	12pcs	Life	> 50000H
Color Temperature	6000k/4000k/3000k	THD	< 15%
Luminous Flux	1100lm	Frequency Range	50/60HZ
Input Voltage	AC100~277V	Lnstallation Pipe Diameter	/
Protection Grade	IP65	CRI	> 90
Operating Temperature	-30~50℃		

DM-CR11a

Standard colours

9004 9006 9007 9016

Bollard light

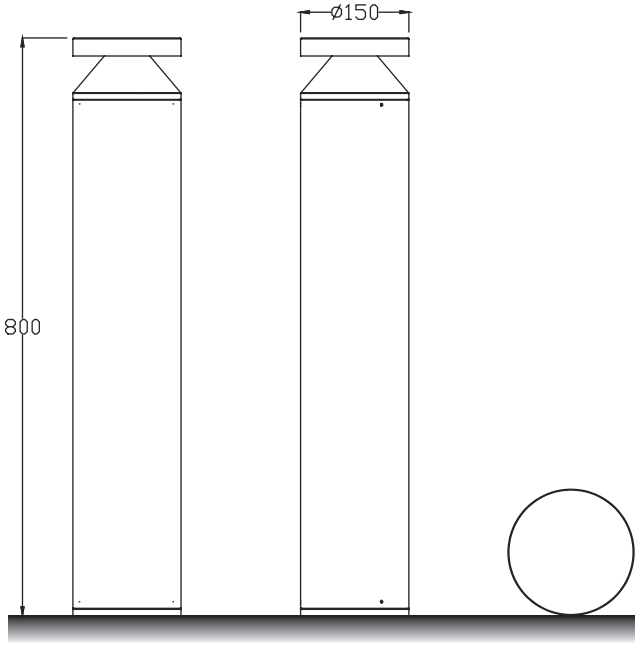

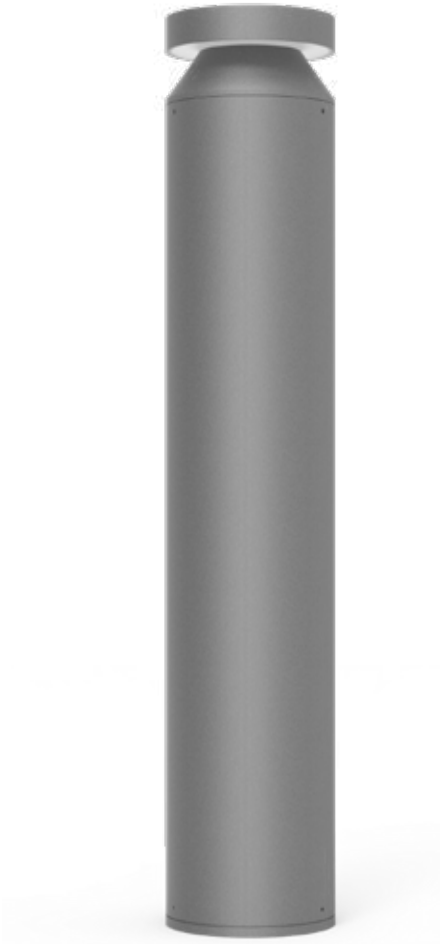

Installation plate

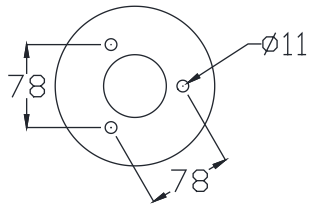

DM-CR12a

Colo(u)r temperature

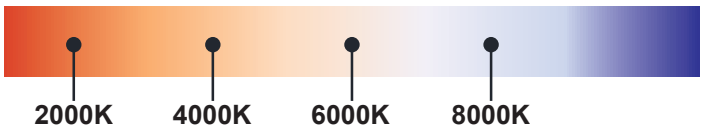

Bollard light

IP65

Rated power	12W	Power Factor	> 0.9
LED Quantity	12pcs	Life	> 50000H
Color Temperature	6000k/4000k/3000k	THD	< 15%
Luminous Flux	1100lm	Frequency Range	50/60HZ
Input Voltage	AC100~277V	Lnstallation Pipe Diameter	/
Protection Grade	IP65	CRI	> 90
Operating Temperature	-30~50℃		

DM-CR12a

Standard colours

9004 9006 9007 9016

Bollard light

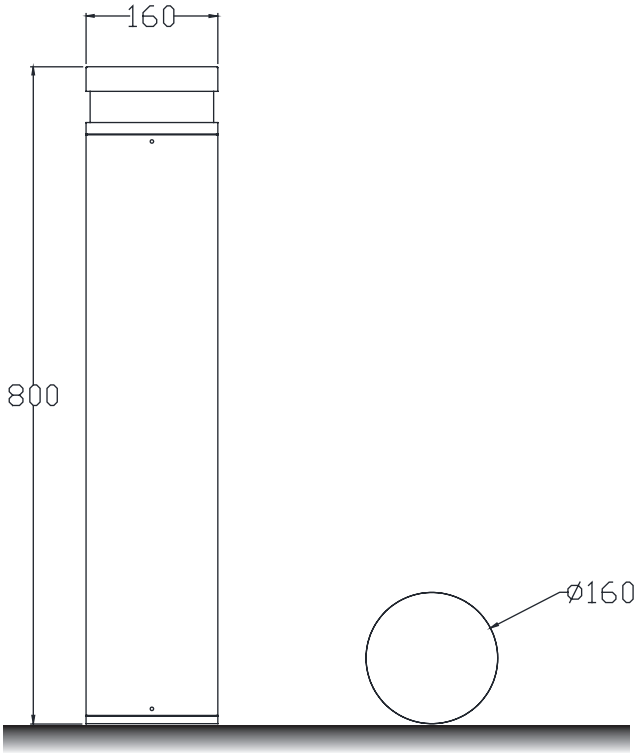

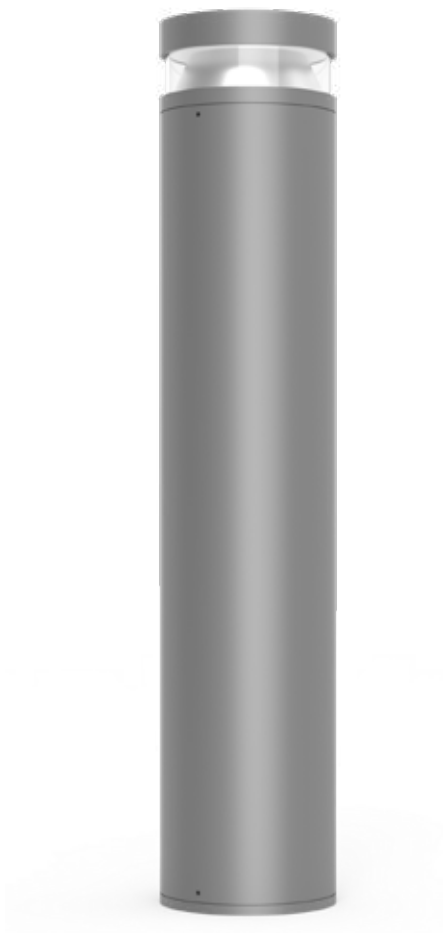

Installation plate

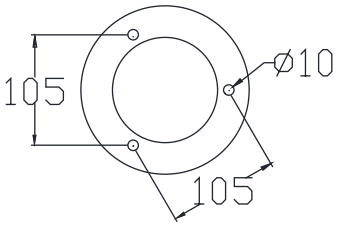

DM-CR13a

Colo(u)r temperature

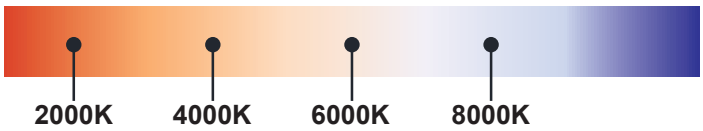

Bollard light

IP65

Rated power	12W	Power Factor	> 0.9
LED Quantity	12pcs	Life	> 50000H
Color Temperature	6000k/4000k/3000k	THD	< 15%
Luminous Flux	1100lm	Frequency Range	50/60HZ
Input Voltage	AC100~277V	Lnstallation Pipe Diameter	/
Protection Grade	IP65	CRI	> 90
Operating Temperature	-30~50℃		

DM-CR13a

Standard colours

9004 9006 9007 9016

Bollard light

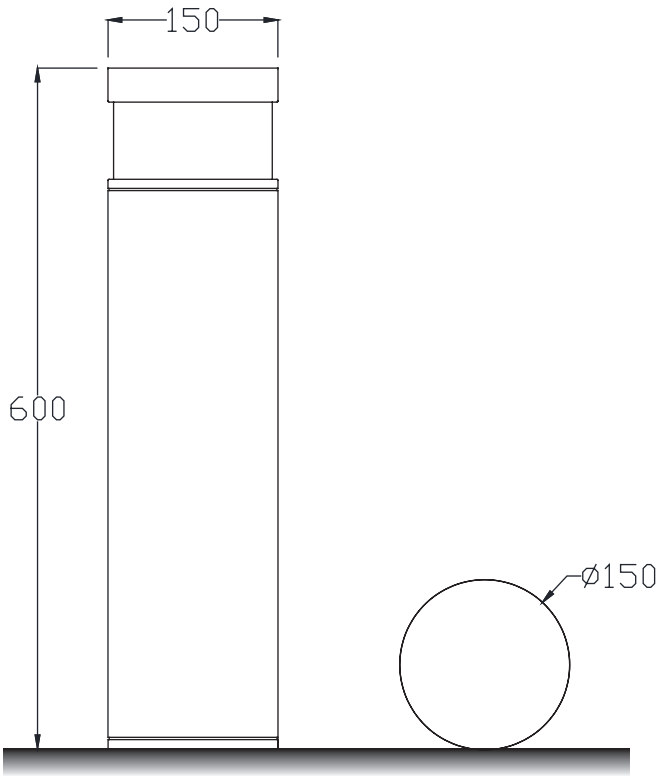

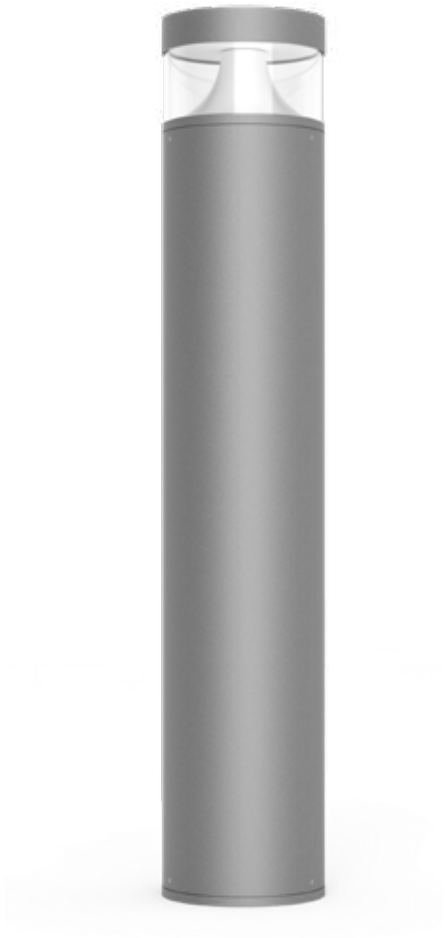

Installation plate

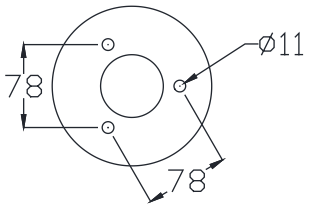

DM-CR14a

Colo(u)r temperature

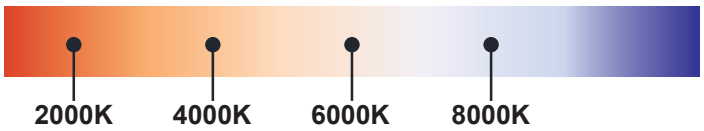

Bollard light

IP65

Rated power	12W	Power Factor	> 0.9
LED Quantity	12pcs	Life	> 50000H
Color Temperature	6000k/4000k/3000k	THD	< 15%
Luminous Flux	1100lm	Frequency Range	50/60HZ
Input Voltage	AC100~277V	Lnstallation Pipe Diameter	/
Protection Grade	IP65	CRI	> 90
Operating Temperature	-30~50℃		

DM-CR14a

Standard colours

9004 9006 9007 9016

Bollard light

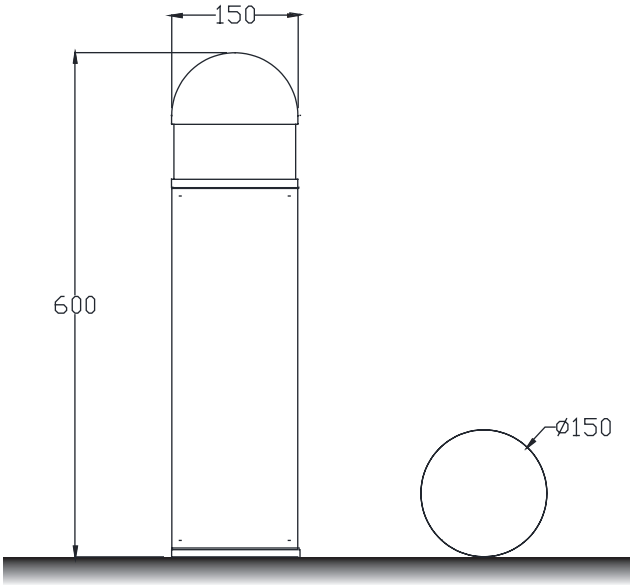

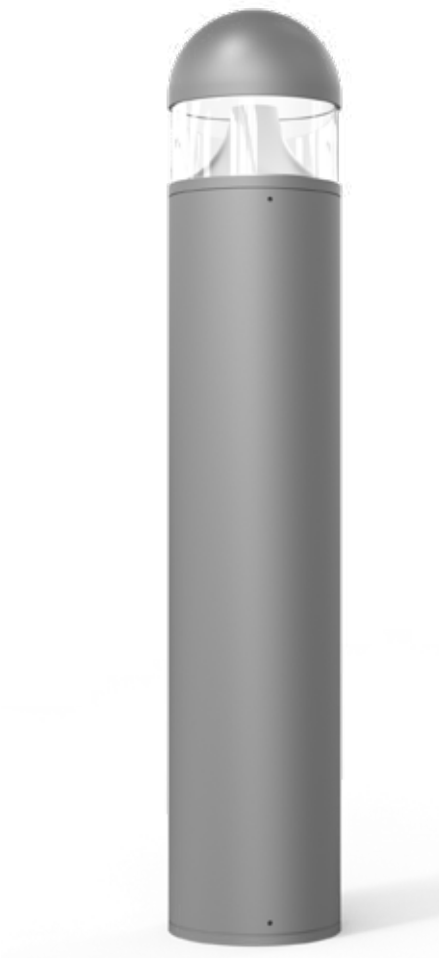

Installation plate

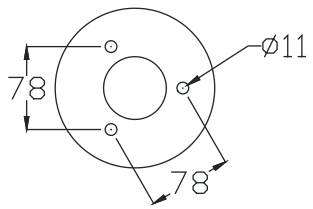

DM-CR14b

Colo(u)r temperature

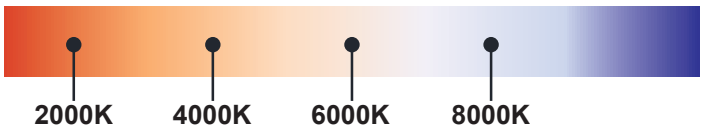

Bollard light

IP65

Rated power	12W	Power Factor	> 0.9
LED Quantity	12pcs	Life	> 50000H
Color Temperature	6000k/4000k/3000k	THD	< 15%
Luminous Flux	1100lm	Frequency Range	50/60HZ
Input Voltage	AC100~277V	Lnstallation Pipe Diameter	/
Protection Grade	IP65	CRI	> 90
Operating Temperature	-30~50℃		

DM-CR14b

Standard colours

9004 9006 9007 9016

Bollard light

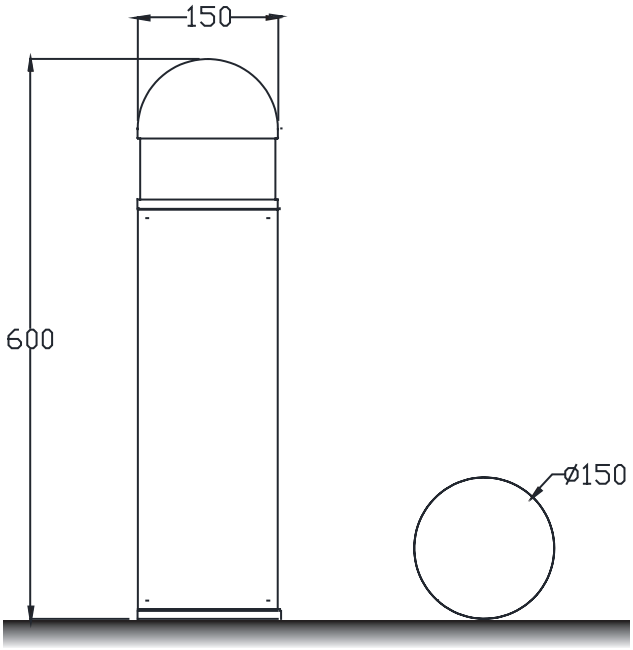

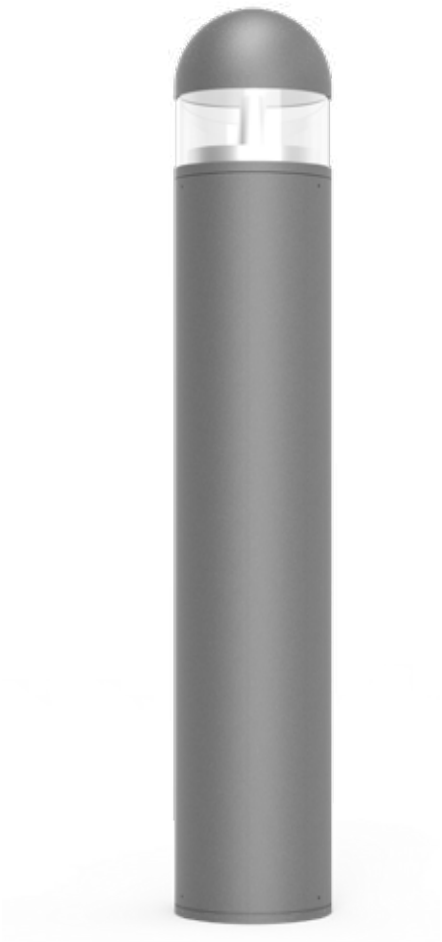

Installation plate

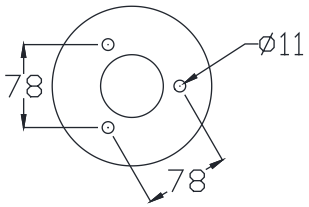

DM-CR15a

Colo(u)r temperature

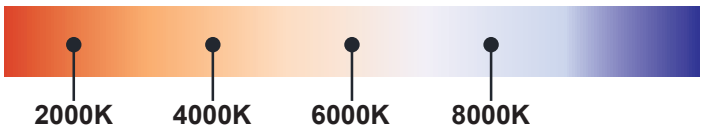

Bollard light

IP65

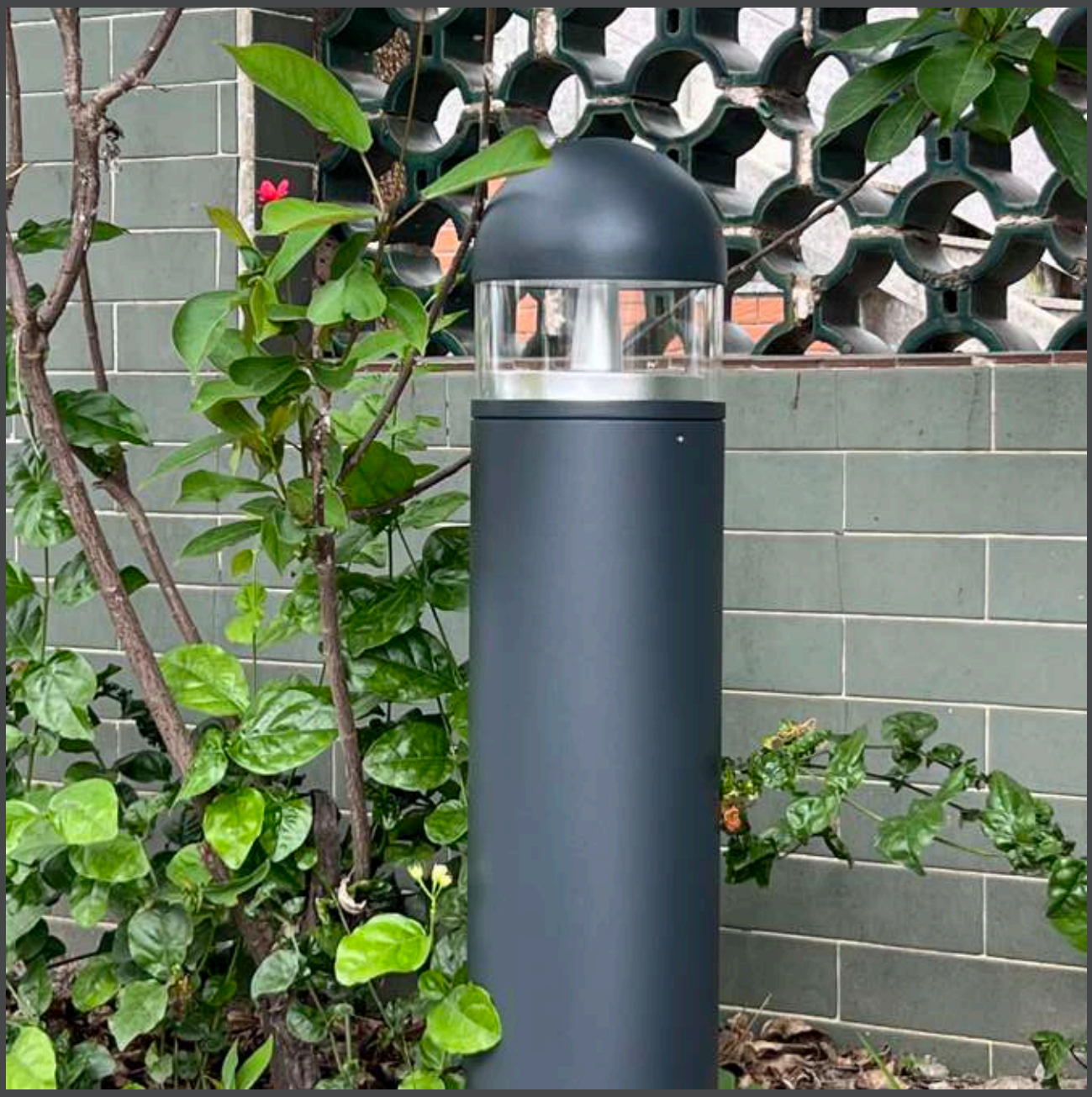

Rated power	12W	Power Factor	> 0.9
LED Quantity	12pcs	Life	> 50000H
Color Temperature	6000k/4000k/3000k	THD	< 15%
Luminous Flux	1100lm	Frequency Range	50/60HZ
Input Voltage	AC100~277V	Lnstallation Pipe Diameter	/
Protection Grade	IP65	CRI	> 90
Operating Temperature	-30~50℃		

DM-CR15a

Standard colours

9004 9006 9007 9016

Bollard light

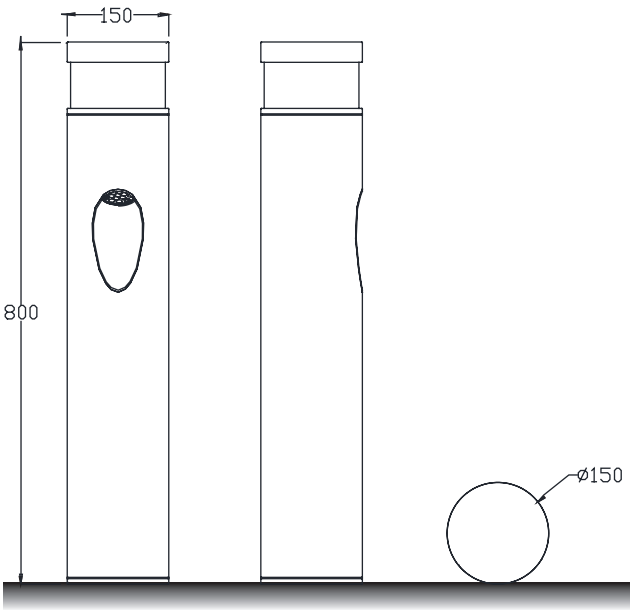

Installation plate

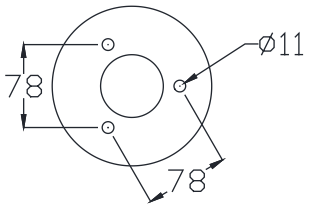

DM-CR16a

Colo(u)r temperature

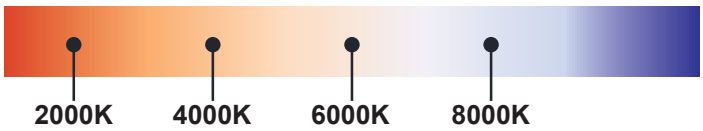

Bollard light

IP65

Rated power	12W	Power Factor	> 0.9
LED Quantity	12pcs	Life	> 50000H
Color Temperature	6000k/4000k/3000k	THD	< 15%
Luminous Flux	1100lm	Frequency Range	50/60HZ
Input Voltage	AC100~277V	Lnstallation Pipe Diameter	/
Protection Grade	IP65	CRI	> 90
Operating Temperature	-30~50℃		

DM-CR16a

Standard colours

9004 9006 9007 9016

Bollard light

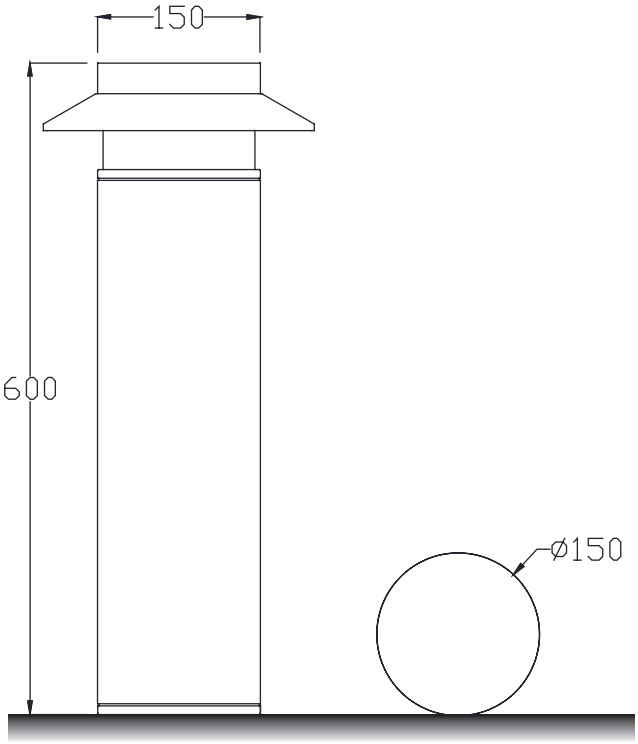

Installation plate

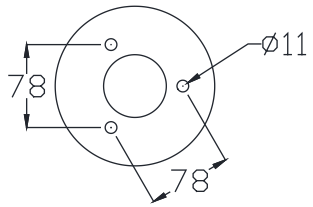

DM-CR17a

Colo(u)r temperature

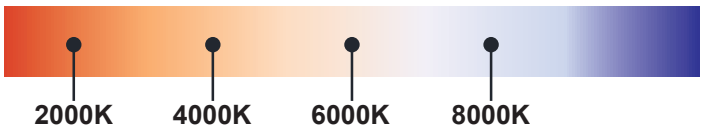

Bollard light

IP65

Rated power	12W	Power Factor	> 0.9
LED Quantity	12pcs	Life	> 50000H
Color Temperature	6000k/4000k/3000k	THD	< 15%
Luminous Flux	1100lm	Frequency Range	50/60HZ
Input Voltage	AC100~277V	Lnstallation Pipe Diameter	/
Protection Grade	IP65	CRI	> 90
Operating Temperature	-30~50℃		

DM-CR17a

Standard colours

9004 9006 9007 9016

Bollard light

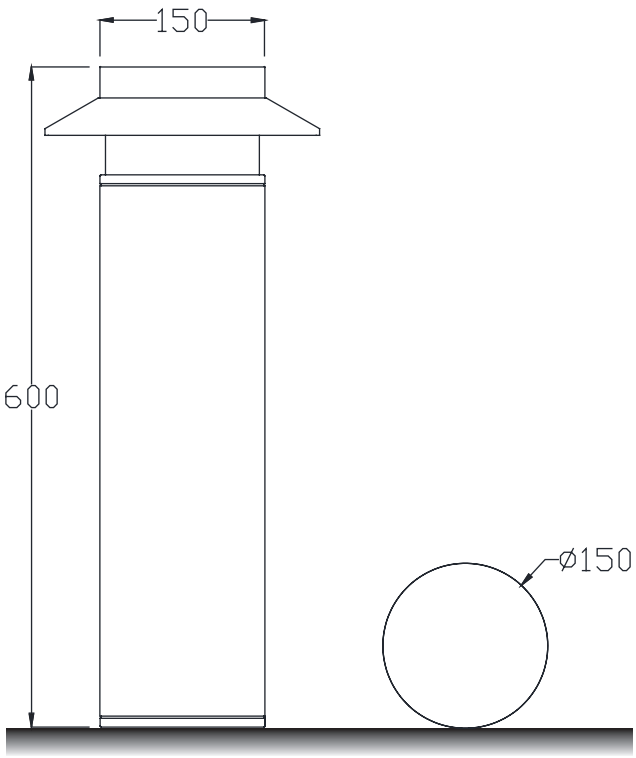

Installation plate

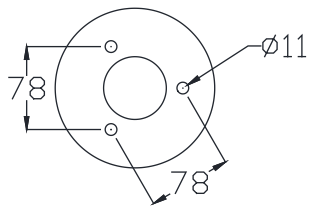

DM-CR18a

Colo(u)r temperature

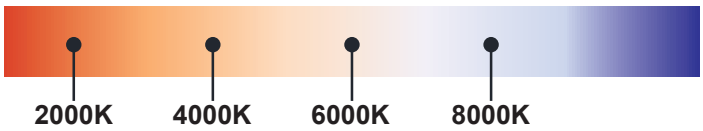

Bollard light

IP65

Rated power	12W	Power Factor	> 0.9
LED Quantity	12pcs	Life	> 50000H
Color Temperature	6000k/4000k/3000k	THD	< 15%
Luminous Flux	1100lm	Frequency Range	50/60HZ
Input Voltage	AC100~277V	Lnstallation Pipe Diameter	/
Protection Grade	IP65	CRI	> 90
Operating Temperature	-30~50℃		

DM-CR18a

Standard colours

9004 9006 9007 9016

Bollard light

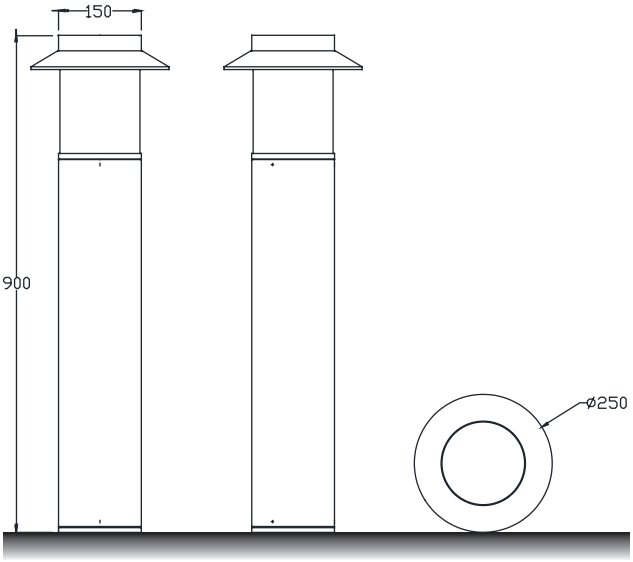

Installation plate

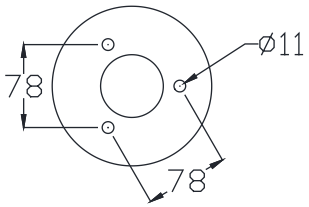

DM-CR19a

Colo(u)r temperature

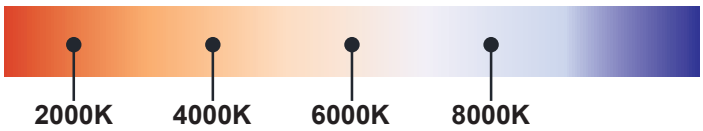

Bollard light

IP65

Rated power	12W	Power Factor	> 0.9
LED Quantity	12pcs	Life	> 50000H
Color Temperature	6000k/4000k/3000k	THD	< 15%
Luminous Flux	1100lm	Frequency Range	50/60HZ
Input Voltage	AC100~277V	Lnstallation Pipe Diameter	/
Protection Grade	IP65	CRI	> 90
Operating Temperature	-30~50℃		

DM-CR19a

Standard colours

9004 9006 9007 9016

Bollard light

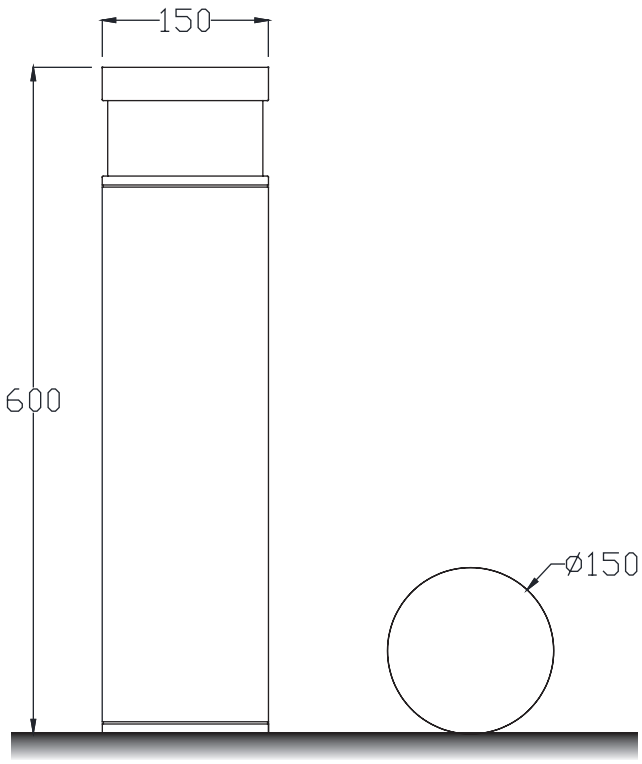

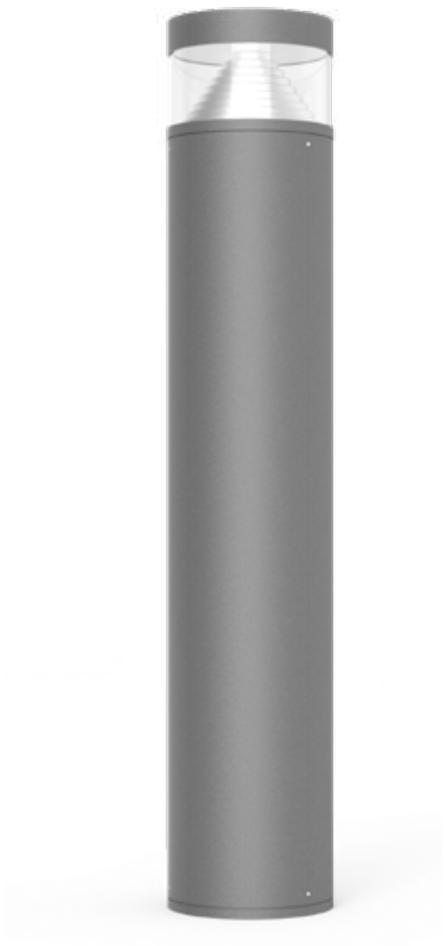

Installation plate

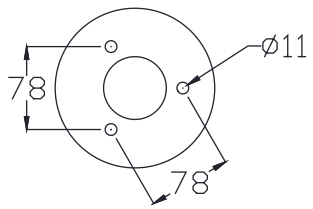

DM-CR20a

Colo(u)r temperature

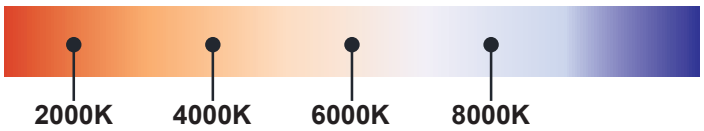

Bollard light

IP65

Rated power	12W	Power Factor	> 0.9
LED Quantity	12pcs	Life	> 50000H
Color Temperature	6000k/4000k/3000k	THD	< 15%
Luminous Flux	1100lm	Frequency Range	50/60HZ
Input Voltage	AC100~277V	Lnstallation Pipe Diameter	/
Protection Grade	IP65	CRI	> 90
Operating Temperature	-30~50℃		

DM-CR20a

Standard colours

9004 9006 9007 9016

Bollard light

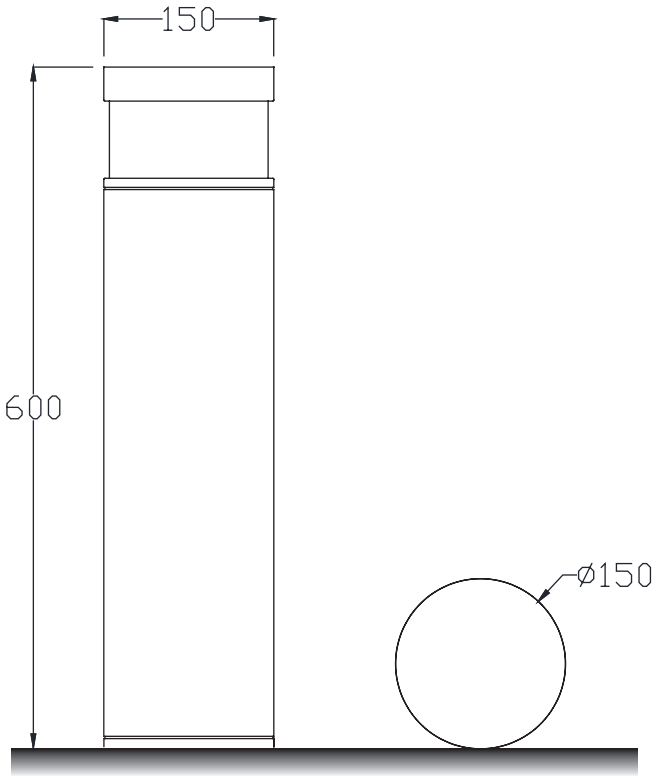

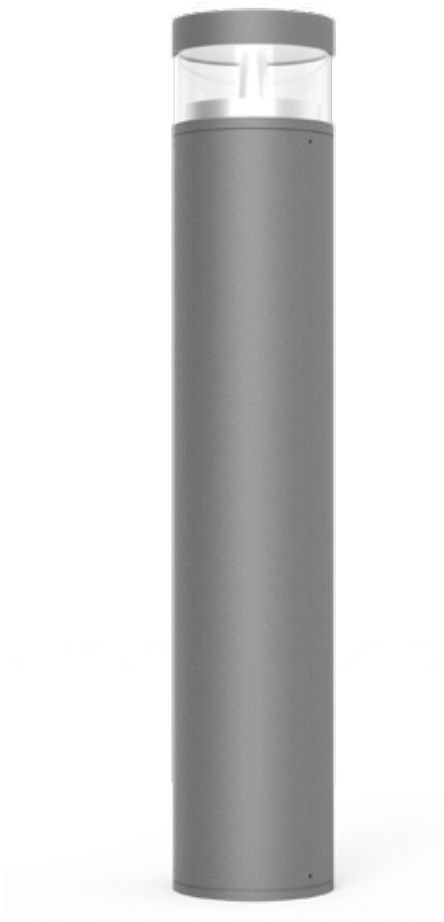

Installation plate

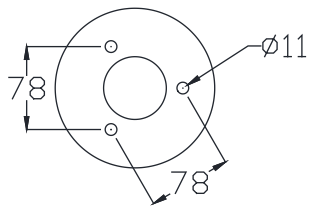

DM-CR21a

Colo(u)r temperature

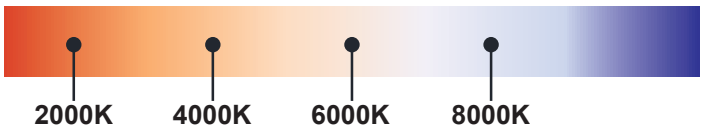

Bollard light

IP65

Rated power	12W	Power Factor	> 0.9
LED Quantity	12pcs	Life	> 50000H
Color Temperature	6000k/4000k/3000k	THD	< 15%
Luminous Flux	1100lm	Frequency Range	50/60HZ
Input Voltage	AC100~277V	Lnstallation Pipe Diameter	/
Protection Grade	IP65	CRI	> 90
Operating Temperature	-30~50℃		

DM-CR21a

Standard colours

9004 9006 9007 9016

Bollard light

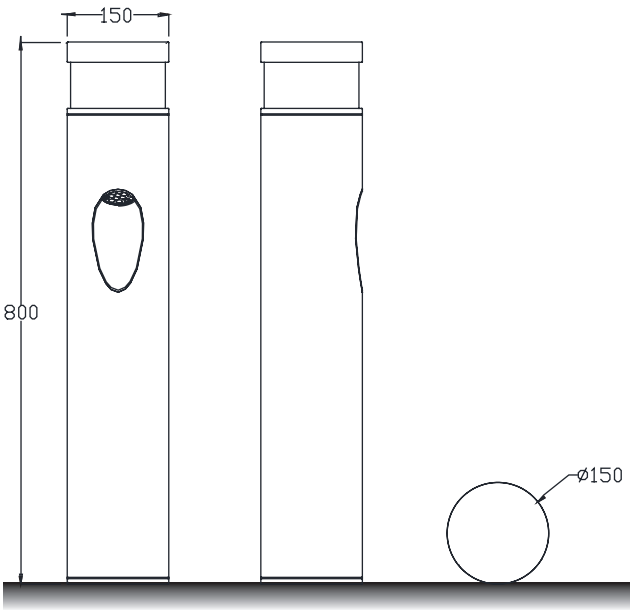

Installation plate

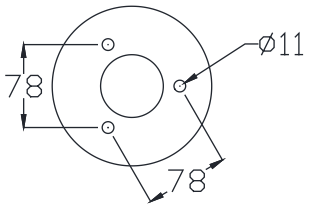

DM-CR22a

Colo(u)r temperature

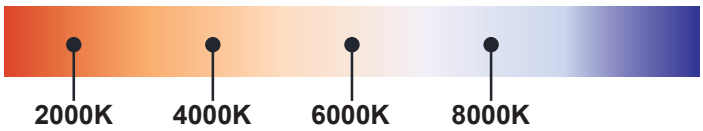

Bollard light

IP65

Rated power	12W	Power Factor	> 0.9
LED Quantity	12pcs	Life	> 50000H
Color Temperature	6000k/4000k/3000k	THD	< 15%
Luminous Flux	1100lm	Frequency Range	50/60HZ
Input Voltage	AC100~277V	Lnstallation Pipe Diameter	/
Protection Grade	IP65	CRI	> 90
Operating Temperature	-30~50℃		

DM-CR22a

Standard colours

9004 9006 9007 9016

Bollard light

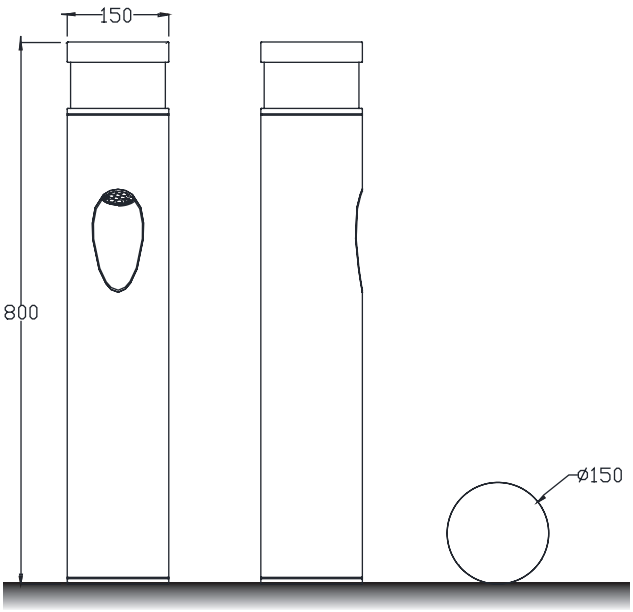

Installation plate

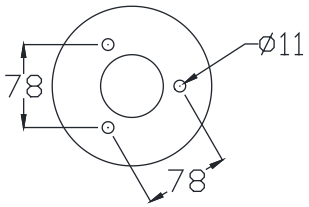

DM-CR23a

Colo(u)r temperature

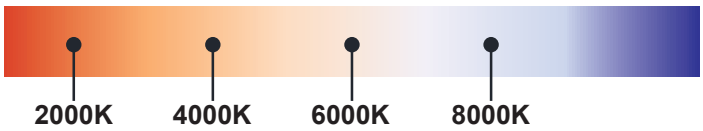

Bollard light

IP65

Rated power	12W	Power Factor	> 0.9
LED Quantity	12pcs	Life	> 50000H
Color Temperature	6000k/4000k/3000k	THD	< 15%
Luminous Flux	1100lm	Frequency Range	50/60HZ
Input Voltage	AC100~277V	Lnstallation Pipe Diameter	/
Protection Grade	IP65	CRI	> 90
Operating Temperature	-30~50℃		

DM-CR23a

Standard colours

9004 9006 9007 9016

Bollard light

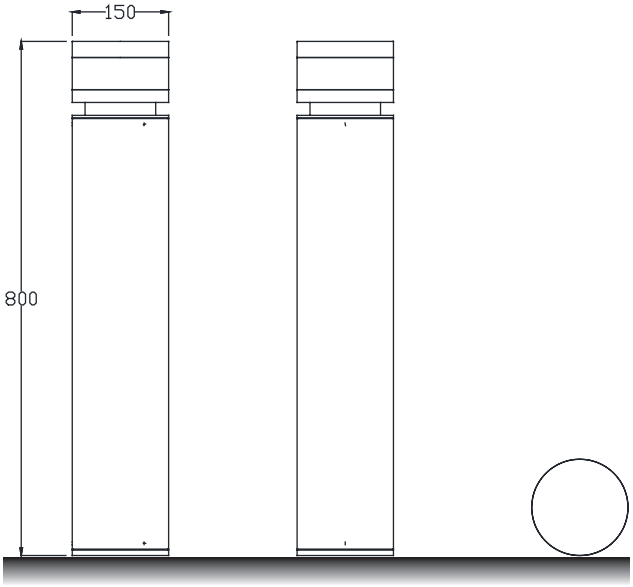

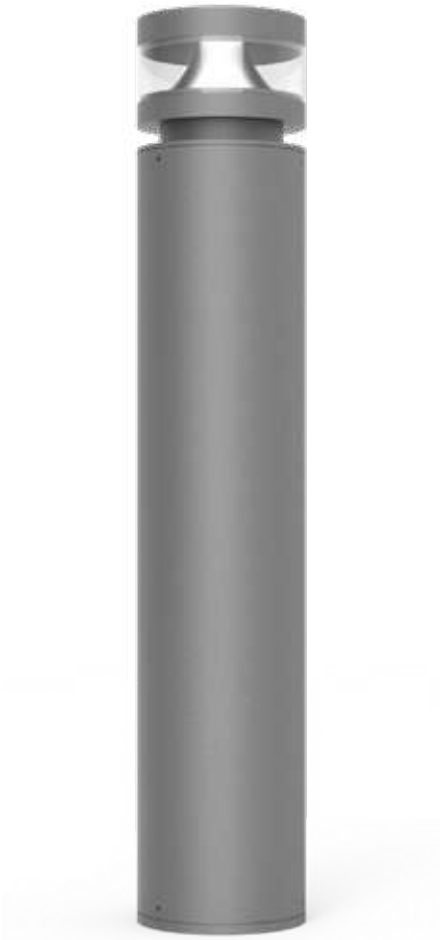

Installation plate

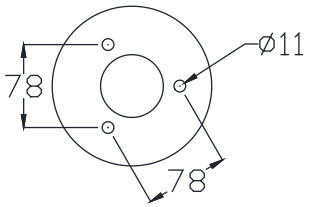

DM-CR24a

Colo(u)r temperature

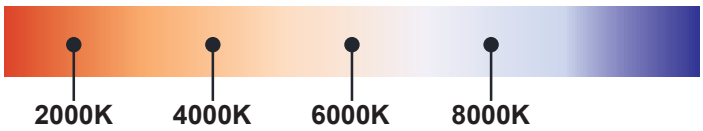

Bollard light

IP65

Rated power	12W	Power Factor	> 0.9
LED Quantity	12pcs	Life	> 50000H
Color Temperature	6000k/4000k/3000k	THD	< 15%
Luminous Flux	1100lm	Frequency Range	50/60HZ
Input Voltage	AC100~277V	Lnstallation Pipe Diameter	/
Protection Grade	IP65	CRI	> 90
Operating Temperature	-30~50℃		

DM-CR24a

Standard colours

9004 9006 9007 9016

Bollard light

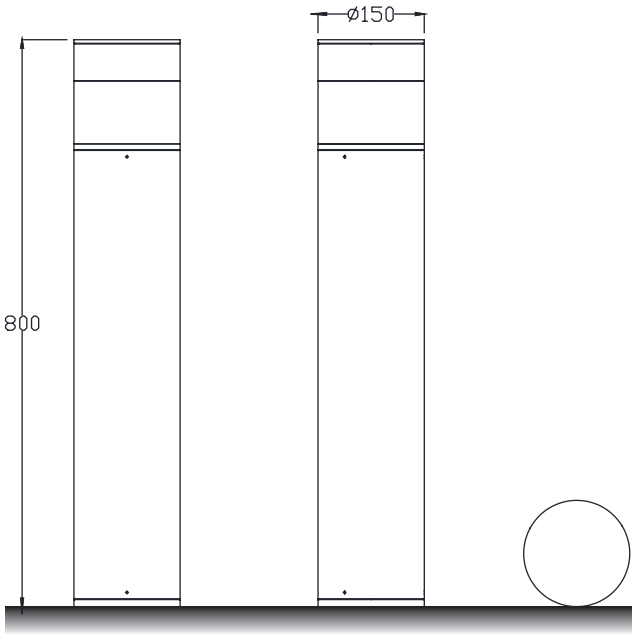

Installation plate

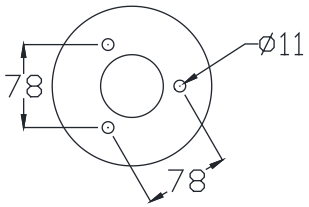

DM-CR25a

Colo(u)r temperature

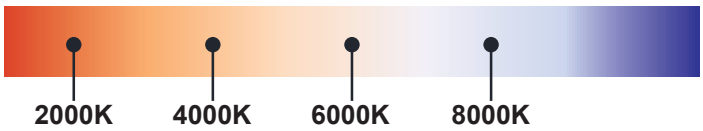

Bollard light

IP65

Rated power	12W	Power Factor	> 0.9
LED Quantity	12pcs	Life	> 50000H
Color Temperature	6000k/4000k/3000k	THD	< 15%
Luminous Flux	1100lm	Frequency Range	50/60HZ
Input Voltage	AC100~277V	Lnstallation Pipe Diameter	/
Protection Grade	IP65	CRI	> 90
Operating Temperature	-30~50℃		

DM-CR1a

Standard colours

9004 9006 9007 9016

Bollard light

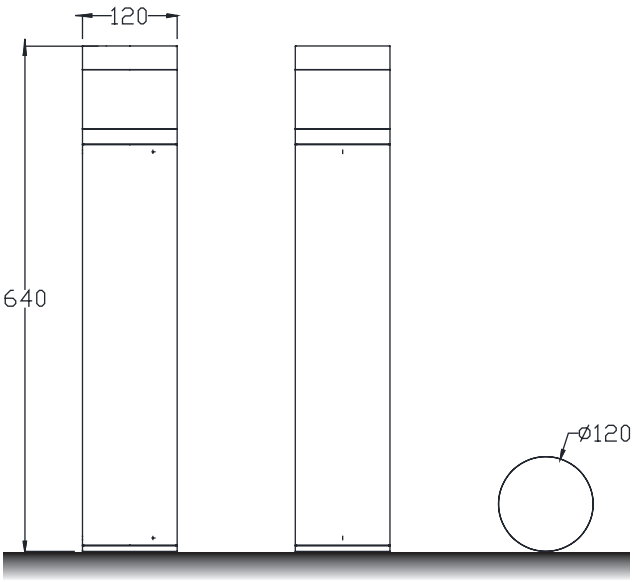

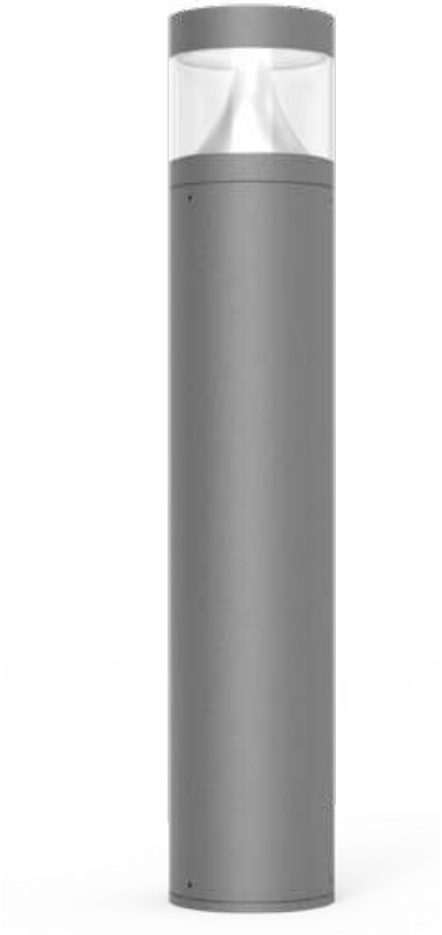

Installation plate

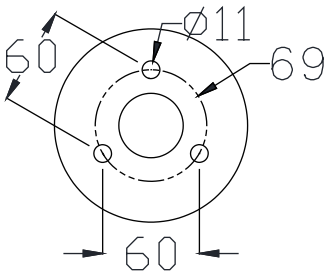

DM-CR26a

Colo(u)r temperature

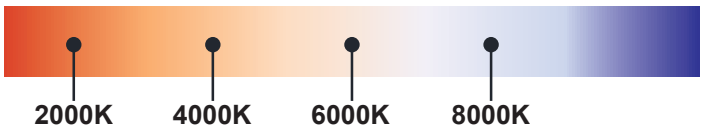

Bollard light

IP65

Rated power	12W	Power Factor	> 0.9
LED Quantity	12pcs	Life	> 50000H
Color Temperature	6000k/4000k/3000k	THD	< 15%
Luminous Flux	1100lm	Frequency Range	50/60HZ
Input Voltage	AC100~277V	Lnstallation Pipe Diameter	/
Protection Grade	IP65	CRI	> 90
Operating Temperature	-30~50℃		

DM-CR26a

Standard colours

9004 9006 9007 9016

Bollard light

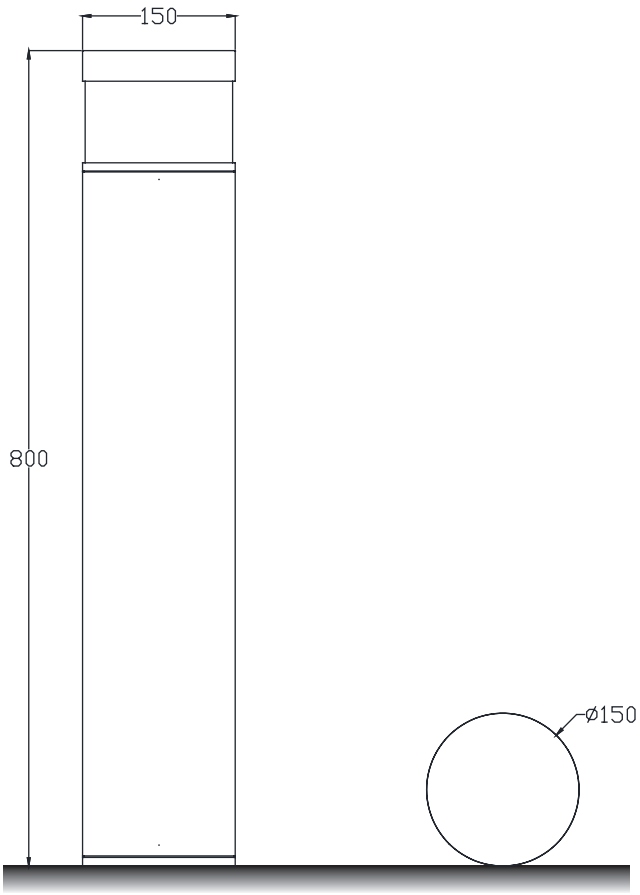

Installation plate

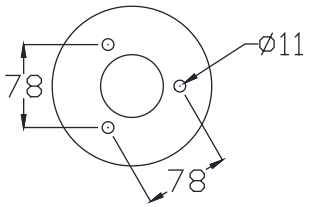

DM-CR27a

Colo(u)r temperature

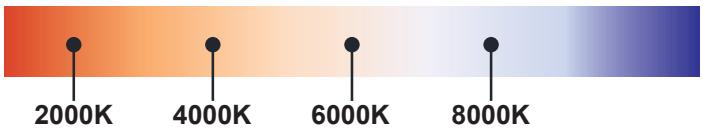

Bollard light

IP65

Rated power	12W	Power Factor	> 0.9
LED Quantity	12pcs	Life	> 50000H
Color Temperature	6000k/4000k/3000k	THD	< 15%
Luminous Flux	1100lm	Frequency Range	50/60HZ
Input Voltage	AC100~277V	Lnstallation Pipe Diameter	/
Protection Grade	IP65	CRI	> 90
Operating Temperature	-30~50℃		

DM-CR27a

Standard colours

9004 9006 9007 9016

Bollard light

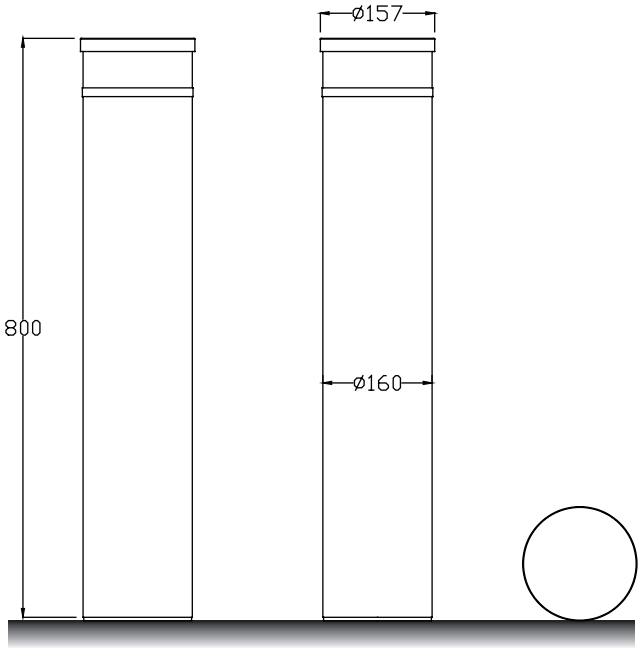

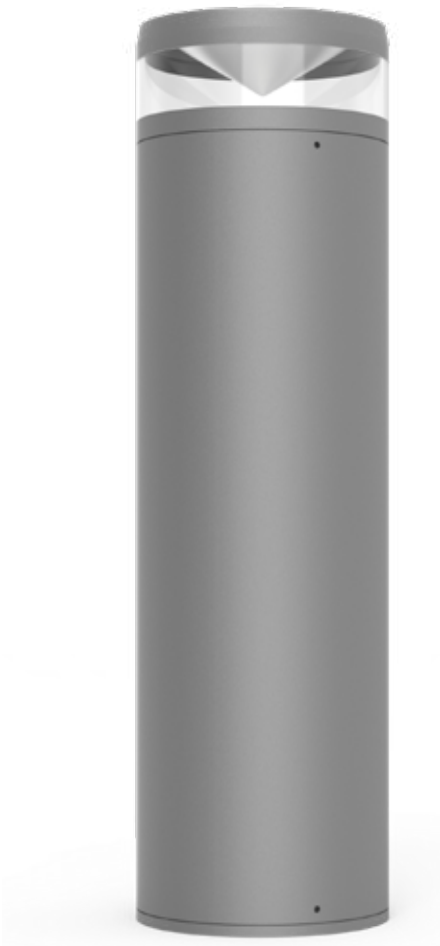

Installation plate

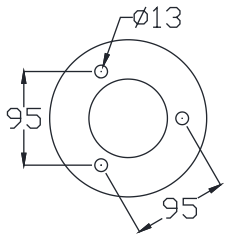

DM-CR28a

Colo(u)r temperature

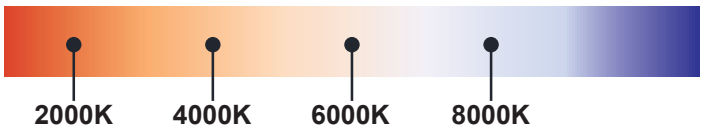

Bollard light

IP65

Rated power	12W	Power Factor	> 0.9
LED Quantity	12pcs	Life	> 50000H
Color Temperature	6000k/4000k/3000k	THD	< 15%
Luminous Flux	1100lm	Frequency Range	50/60HZ
Input Voltage	AC100~277V	Lnstallation Pipe Diameter	/
Protection Grade	IP65	CRI	> 90
Operating Temperature	-30~50℃		

DM-CR28a

Standard colours

9004 9006 9007 9016

Bollard light

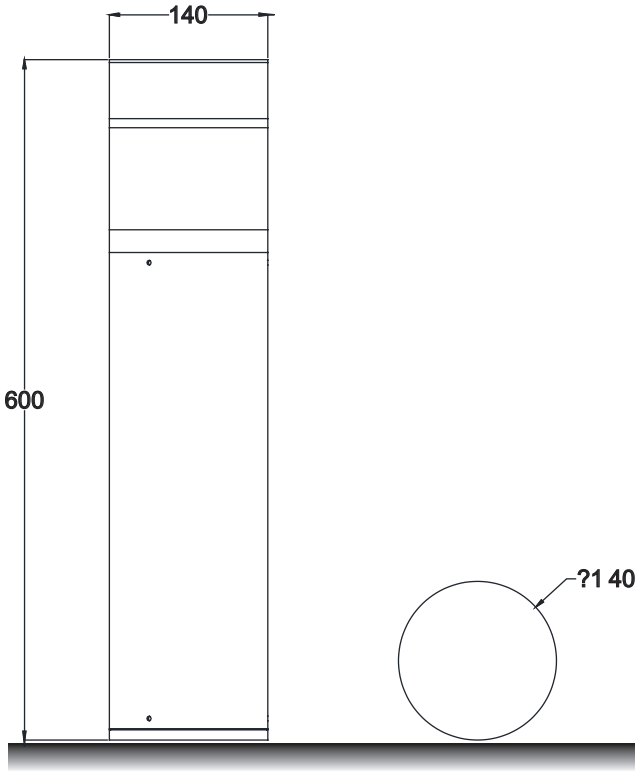

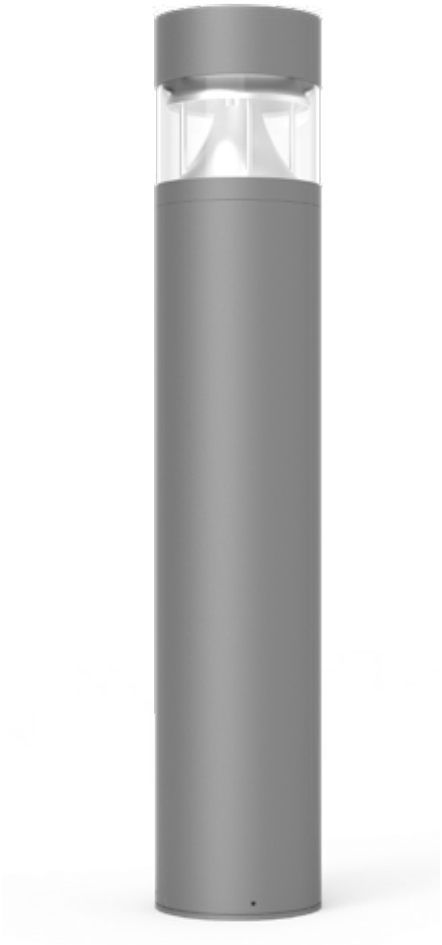

Installation plate

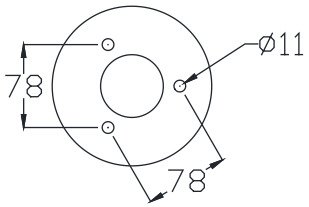

DM-CR29a

Colo(u)r temperature

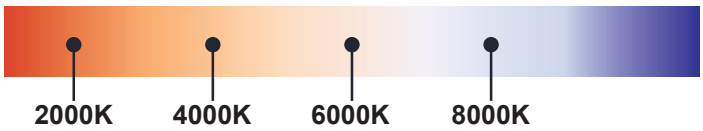

Bollard light

IP65

Rated power	12W	Power Factor	> 0.9
LED Quantity	12pcs	Life	> 50000H
Color Temperature	6000k/4000k/3000k	THD	< 15%
Luminous Flux	1100lm	Frequency Range	50/60HZ
Input Voltage	AC100~277V	Lnstallation Pipe Diameter	/
Protection Grade	IP65	CRI	> 90
Operating Temperature	-30~50℃		

DM-CR29a

Standard colours

9004 9006 9007 9016

Bollard light

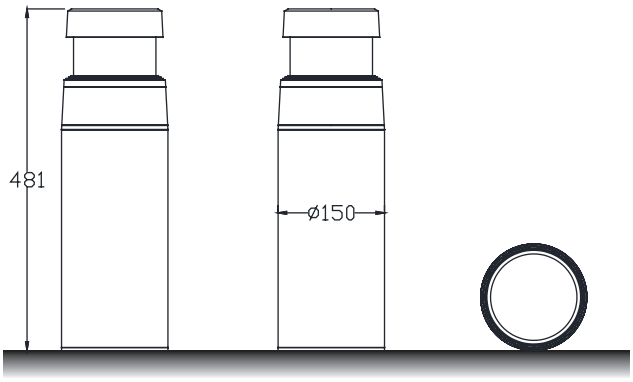

Installation plate

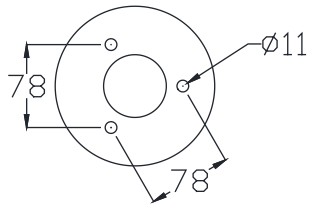

DM-CR30a

Colo(u)r temperature

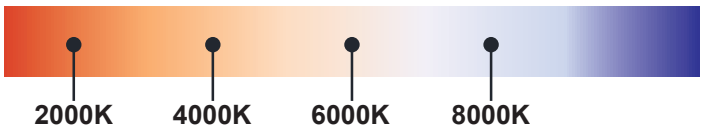

Bollard light

IP65

Rated power	12W	Power Factor	> 0.9
LED Quantity	12pcs	Life	> 50000H
Color Temperature	6000k/4000k/3000k	THD	< 15%
Luminous Flux	1100lm	Frequency Range	50/60HZ
Input Voltage	AC100~277V	Lnstallation Pipe Diameter	/
Protection Grade	IP65	CRI	> 90
Operating Temperature	-30~50℃		

DM-CR30a

Standard colours

9004 9006 9007 9016

Bollard light

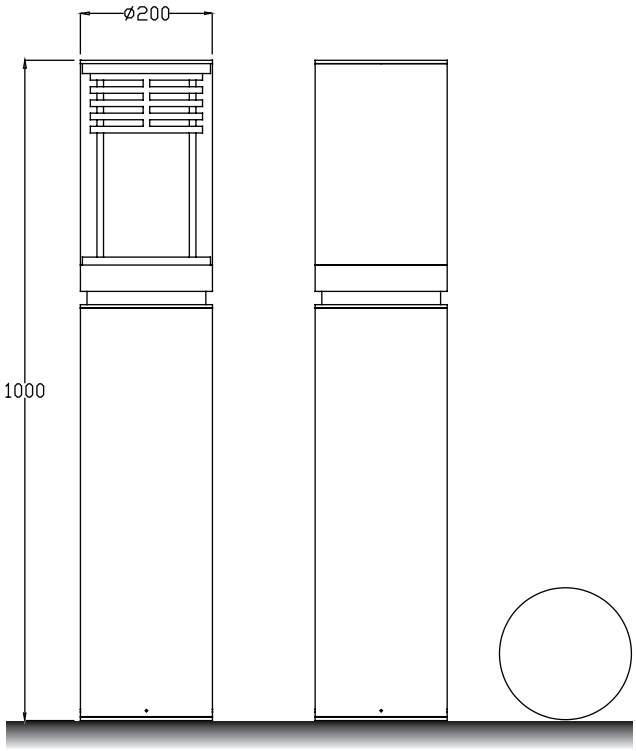

Installation plate

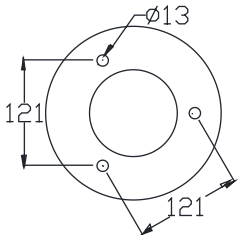

DM-CR31a

Colo(u)r temperature

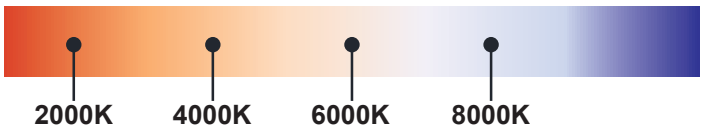

Bollard light

IP65

Rated power	12W	Power Factor	> 0.9
LED Quantity	12pcs	Life	> 50000H
Color Temperature	6000k/4000k/3000k	THD	< 15%
Luminous Flux	1100lm	Frequency Range	50/60HZ
Input Voltage	AC100~277V	Lnstallation Pipe Diameter	/
Protection Grade	IP65	CRI	> 90
Operating Temperature	-30~50℃		

DM-CR31a

Standard colours

9004 9006 9007 9016

Bollard light

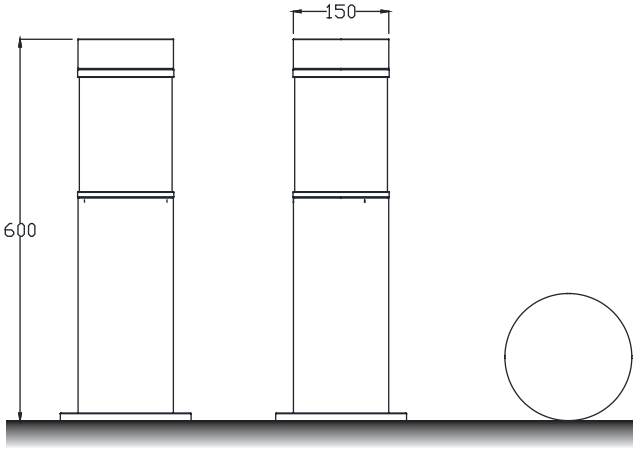

Installation plate

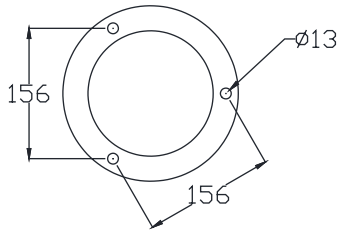

DM-CR32a

Colo(u)r temperature

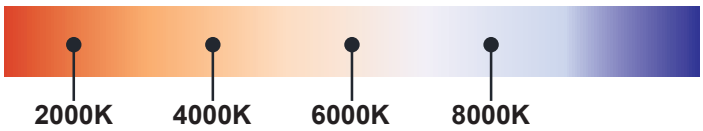

Bollard light

IP65

Rated power	12W	Power Factor	> 0.9
LED Quantity	12pcs	Life	> 50000H
Color Temperature	6000k/4000k/3000k	THD	< 15%
Luminous Flux	1100lm	Frequency Range	50/60HZ
Input Voltage	AC100~277V	Lnstallation Pipe Diameter	/
Protection Grade	IP65	CRI	> 90
Operating Temperature	-30~50℃		

DM-CR32a

Standard colours

9004 9006 9007 9016

Bollard light

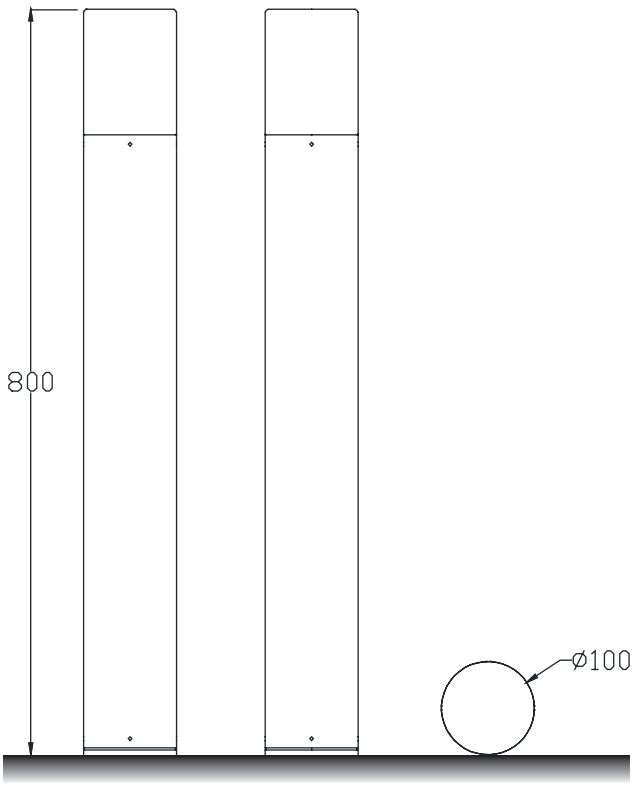

Installation plate

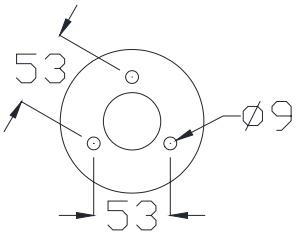

DM-CR33a

Colo(u)r temperature

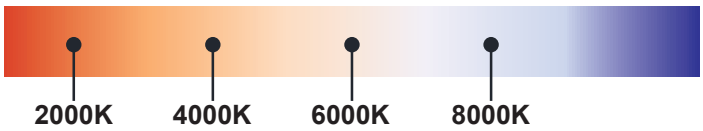

Bollard light

IP65

Rated power	12W	Power Factor	> 0.9
LED Quantity	12pcs	Life	> 50000H
Color Temperature	6000k/4000k/3000k	THD	< 15%
Luminous Flux	1100lm	Frequency Range	50/60HZ
Input Voltage	AC100~277V	Lnstallation Pipe Diameter	/
Protection Grade	IP65	CRI	> 90
Operating Temperature	-30~50℃		

DM-CR33a

Standard colours

9004 9006 9007 9016

Bollard light

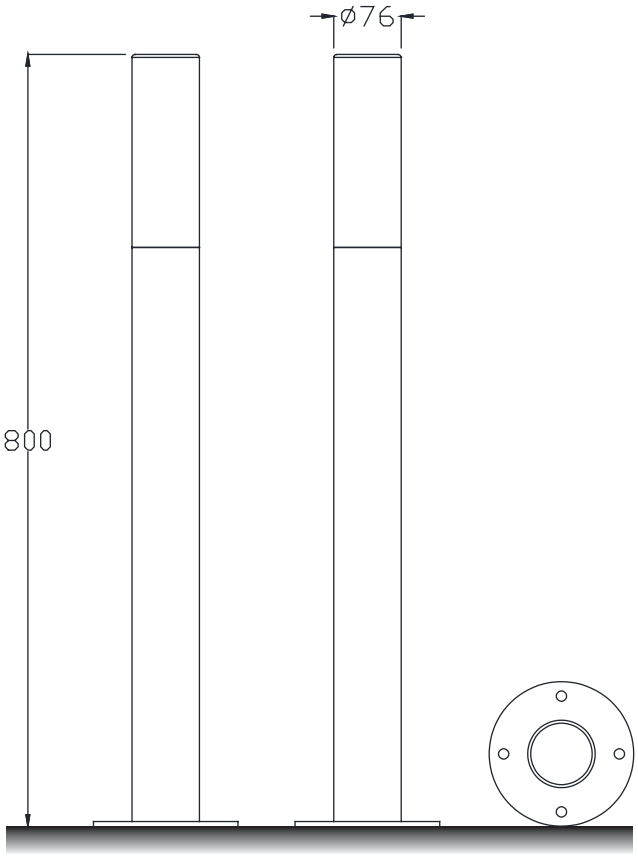

Installation plate

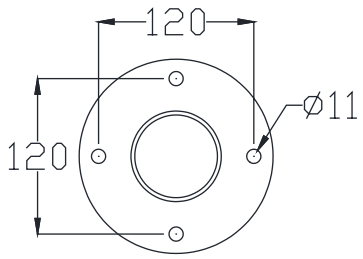

DM-CR34a

Colo(u)r temperature

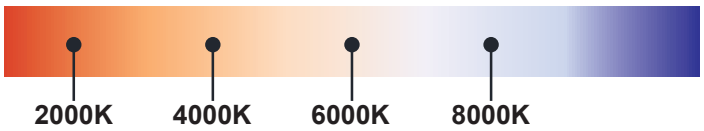

Bollard light

IP65

Rated power	12W	Power Factor	> 0.9
LED Quantity	12pcs	Life	> 50000H
Color Temperature	6000k/4000k/3000k	THD	< 15%
Luminous Flux	1100lm	Frequency Range	50/60HZ
Input Voltage	AC100~277V	Lnstallation Pipe Diameter	/
Protection Grade	IP65	CRI	> 90
Operating Temperature	-30~50℃		

DM-CR34a

Standard colours

9004 9006 9007 9016

Bollard light

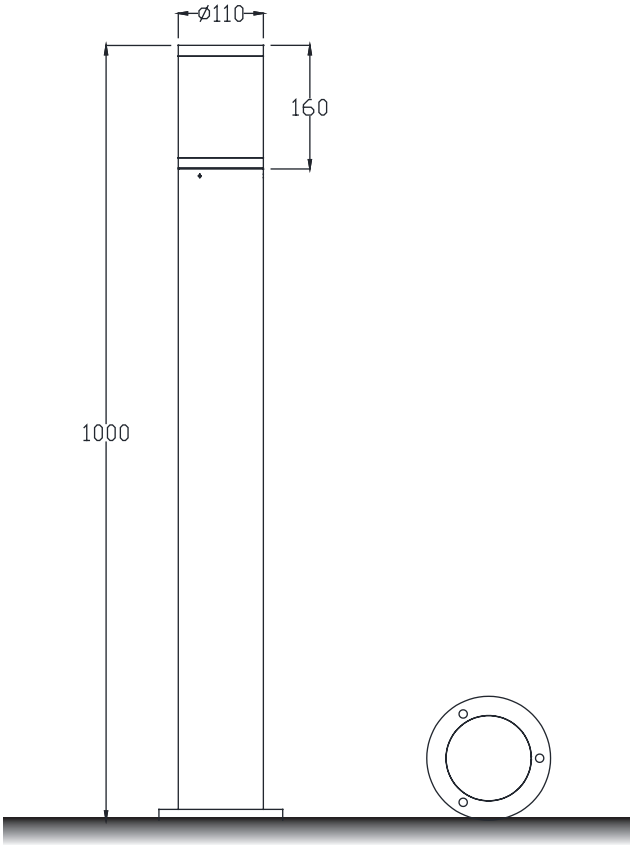

Installation plate

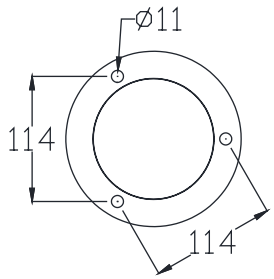

DM-CR35a

Colo(u)r temperature

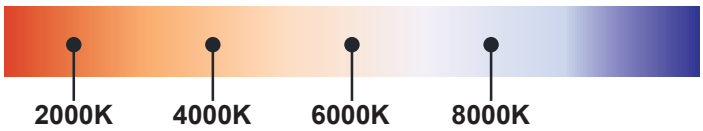

Bollard light

IP65

Rated power	12W	Power Factor	> 0.9
LED Quantity	12pcs	Life	> 50000H
Color Temperature	6000k/4000k/3000k	THD	< 15%
Luminous Flux	1100lm	Frequency Range	50/60HZ
Input Voltage	AC100~277V	Lnstallation Pipe Diameter	/
Protection Grade	IP65	CRI	> 90
Operating Temperature	-30~50℃		

DM-CR35a

Standard colours

9004 9006 9007 9016

Bollard light

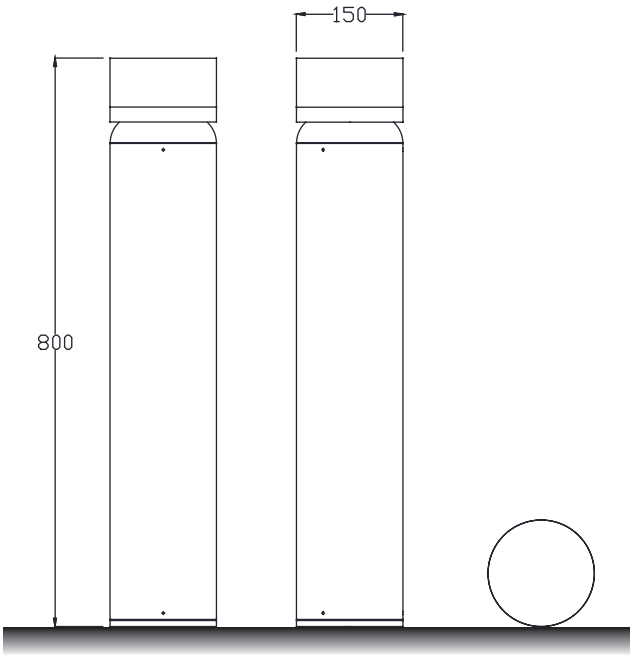

Installation plate

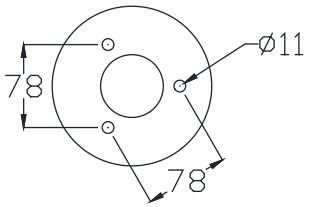

DM-CR36a

Colo(u)r temperature

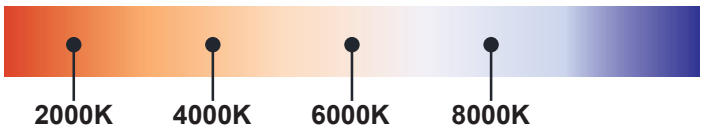

Bollard light

IP65

Rated power	12W	Power Factor	> 0.9
LED Quantity	12pcs	Life	> 50000H
Color Temperature	6000k/4000k/3000k	THD	< 15%
Luminous Flux	1100lm	Frequency Range	50/60HZ
Input Voltage	AC100~277V	Lnstallation Pipe Diameter	/
Protection Grade	IP65	CRI	> 90
Operating Temperature	-30~50℃		

DM-CR36a

Standard colours

9004 9006 9007 9016

Bollard light

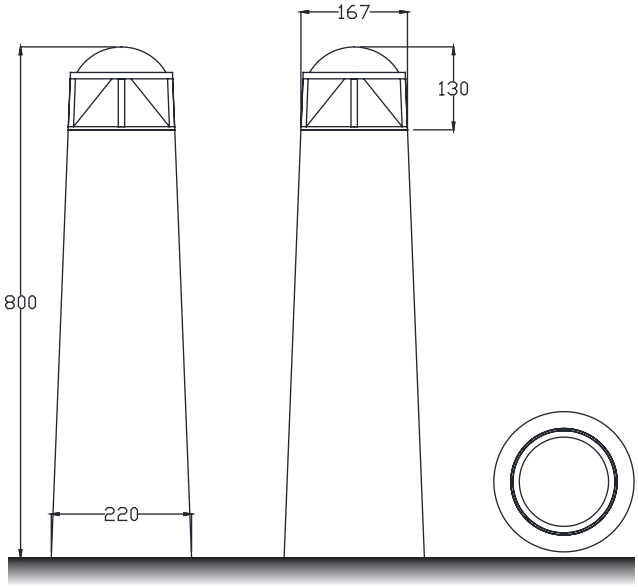

Installation plate

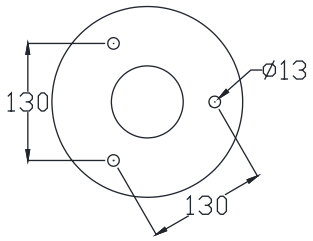

DM-CR37a

Colo(u)r temperature

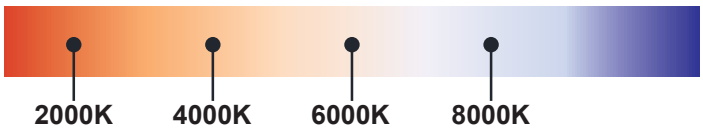

Bollard light

IP65

Rated power	12W	Power Factor	> 0.9
LED Quantity	12pcs	Life	> 50000H
Color Temperature	6000k/4000k/3000k	THD	< 15%
Luminous Flux	1100lm	Frequency Range	50/60HZ
Input Voltage	AC100~277V	Lnstallation Pipe Diameter	/
Protection Grade	IP65	CRI	> 90
Operating Temperature	-30~50℃		

DM-CR37a

Standard colours

9004 9006 9007 9016

Bollard light

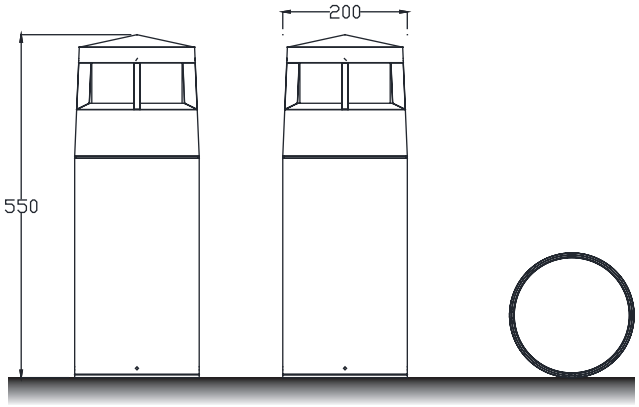

Installation plate

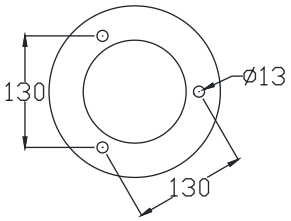

DM-CR38a

Colo(u)r temperature

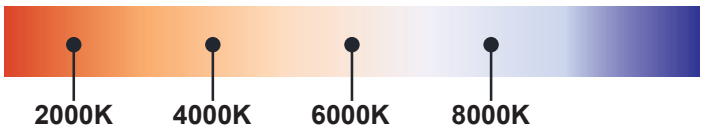

Bollard light

IP65

Rated power	12W	Power Factor	> 0.9
LED Quantity	12pcs	Life	> 50000H
Color Temperature	6000k/4000k/3000k	THD	< 15%
Luminous Flux	1100lm	Frequency Range	50/60HZ
Input Voltage	AC100~277V	Lnstallation Pipe Diameter	/
Protection Grade	IP65	CRI	> 90
Operating Temperature	-30~50℃		

DM-CR38a

Standard colours

9004 9006 9007 9016

Bollard light

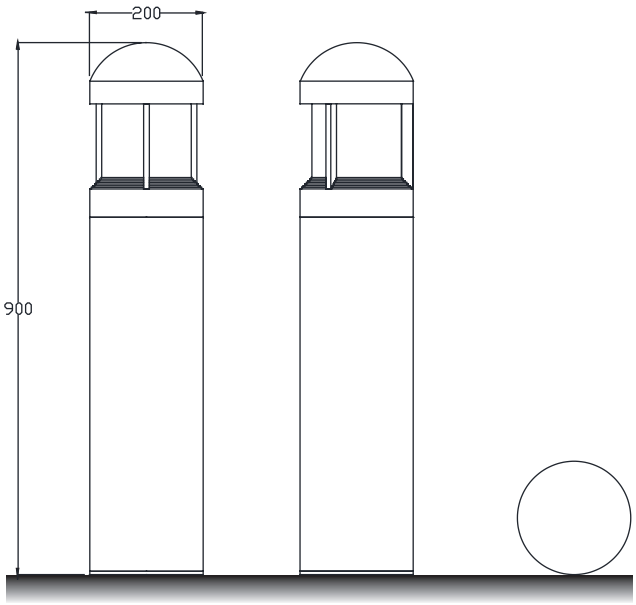

Installation plate

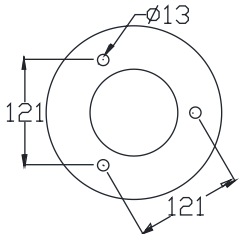

DM-CR39a

Colo(u)r temperature

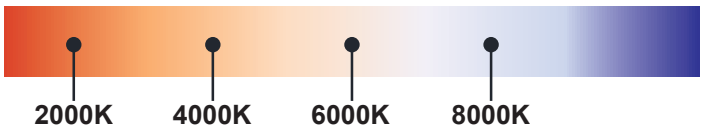

Bollard light

IP65

Rated power	12W	Power Factor	> 0.9
LED Quantity	12pcs	Life	> 50000H
Color Temperature	6000k/4000k/3000k	THD	< 15%
Luminous Flux	1100lm	Frequency Range	50/60HZ
Input Voltage	AC100~277V	Lnstallation Pipe Diameter	/
Protection Grade	IP65	CRI	> 90
Operating Temperature	-30~50℃		

DM-CR39a

Standard colours

9004 9006 9007 9016

Bollard light

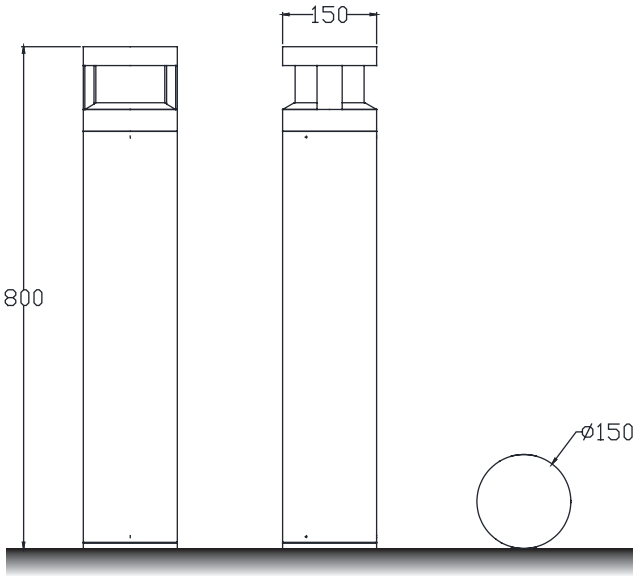

Installation plate

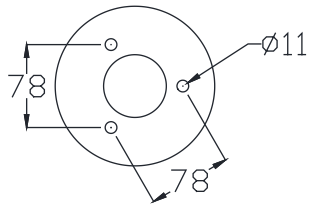

DM-CR40a

Colo(u)r temperature

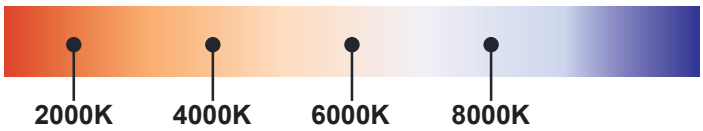

Bollard light

IP65

Rated power	12W	Power Factor	> 0.9
LED Quantity	12pcs	Life	> 50000H
Color Temperature	6000k/4000k/3000k	THD	< 15%
Luminous Flux	1100lm	Frequency Range	50/60HZ
Input Voltage	AC100~277V	Lnstallation Pipe Diameter	/
Protection Grade	IP65	CRI	> 90
Operating Temperature	-30~50℃		

DM-CR40a

Standard colours

9004 9006 9007 9016

Bollard light

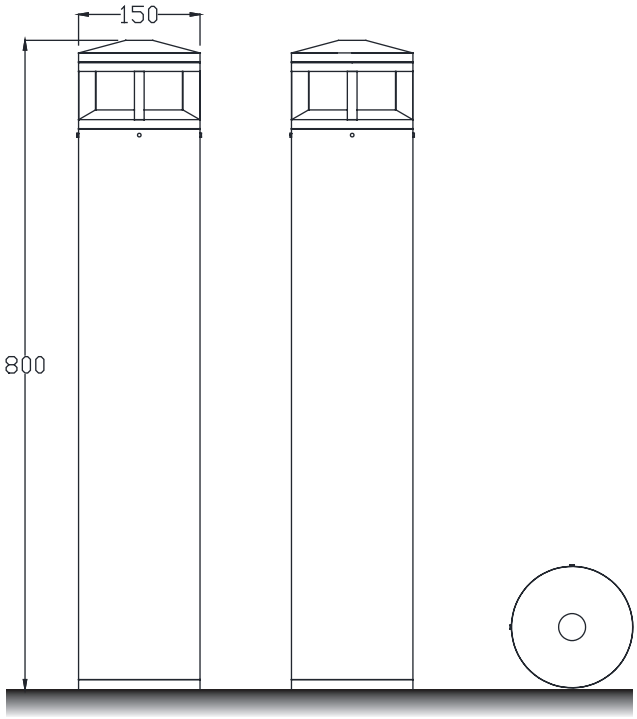

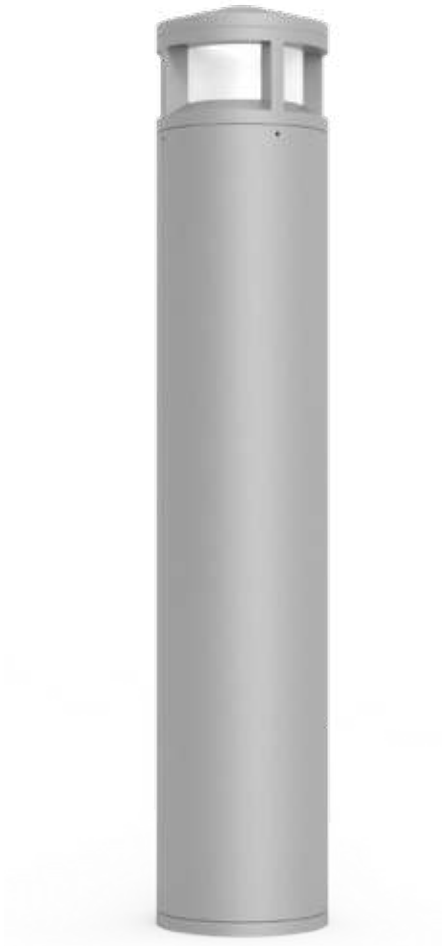

Installation plate

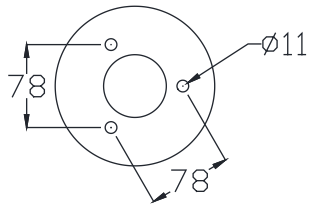

DM-CR41a

Colo(u)r temperature

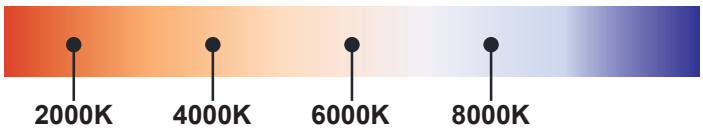

Bollard light

IP65

Rated power	12W	Power Factor	> 0.9
LED Quantity	12pcs	Life	> 50000H
Color Temperature	6000k/4000k/3000k	THD	< 15%
Luminous Flux	1100lm	Frequency Range	50/60HZ
Input Voltage	AC100~277V	Lnstallation Pipe Diameter	/
Protection Grade	IP65	CRI	> 90
Operating Temperature	-30~50℃		

DM-CR41a

Standard colours

9004 9006 9007 9016

Bollard light

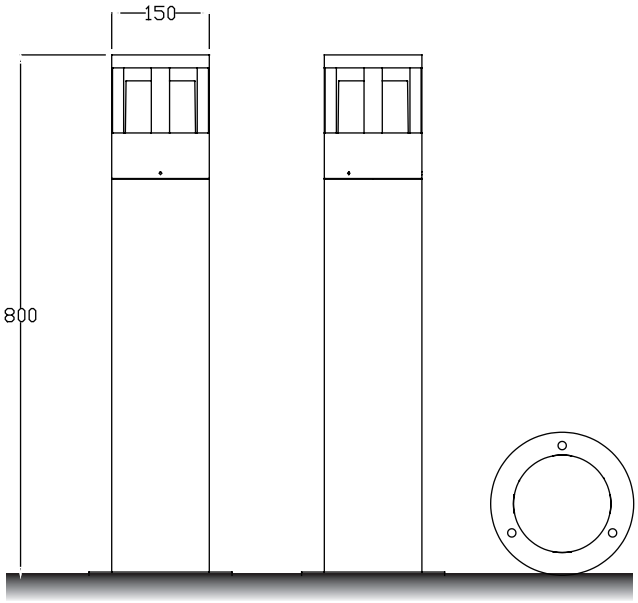

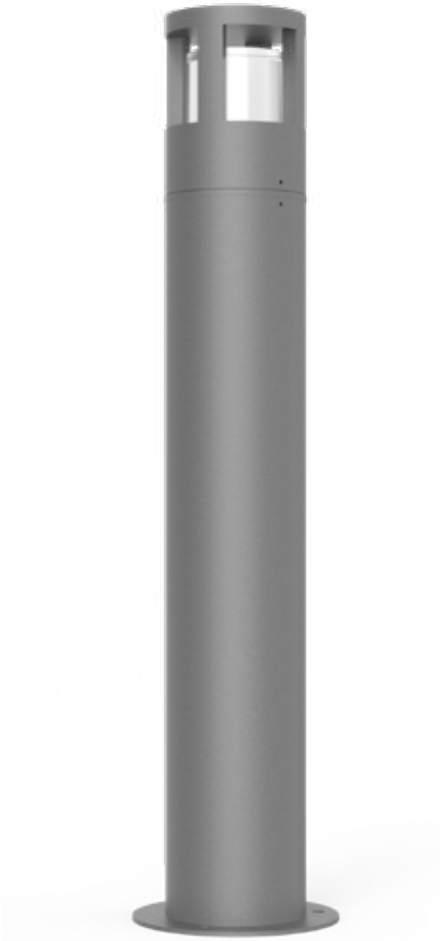

Installation plate

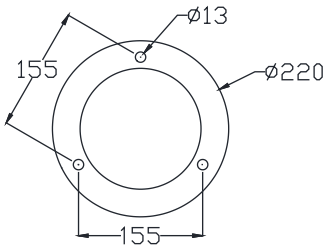

DM-CR42a

Colo(u)r temperature

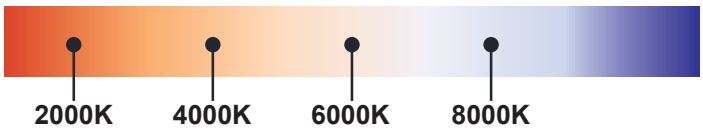

Bollard light

IP65

Rated power	12W	Power Factor	> 0.9
LED Quantity	12pcs	Life	> 50000H
Color Temperature	6000k/4000k/3000k	THD	< 15%
Luminous Flux	1100lm	Frequency Range	50/60HZ
Input Voltage	AC100~277V	Lnstallation Pipe Diameter	/
Protection Grade	IP65	CRI	> 90
Operating Temperature	-30~50℃		

DM-CR42a

Standard colours

9004 9006 9007 9016

Bollard light

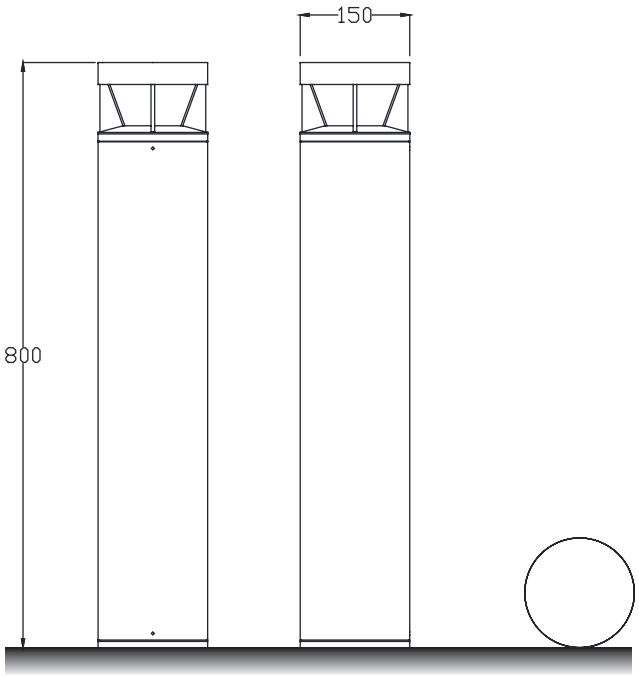

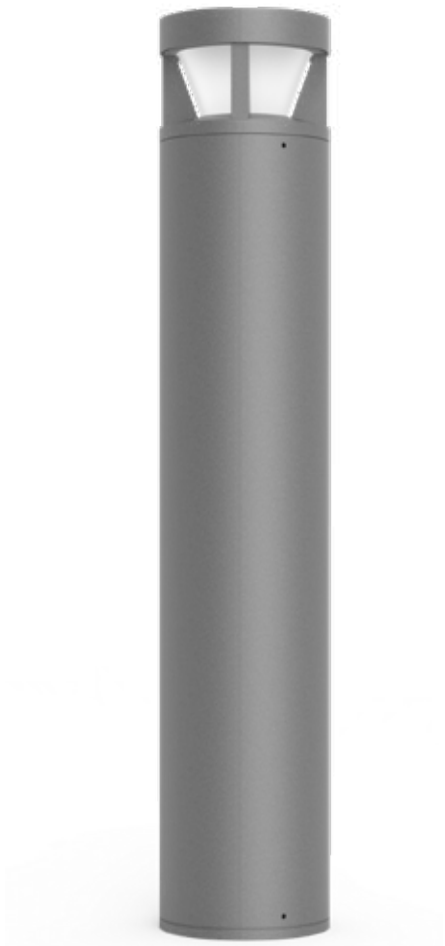

Installation plate

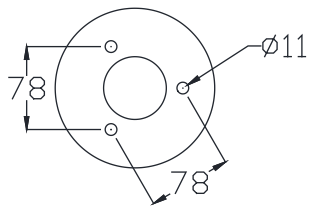

DM-CR43a

Colo(u)r temperature

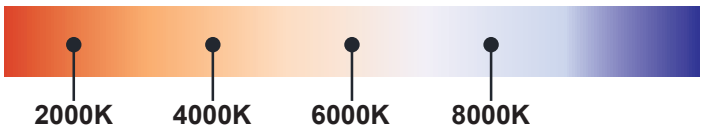

Bollard light

IP65

Rated power	12W	Power Factor	> 0.9
LED Quantity	12pcs	Life	> 50000H
Color Temperature	6000k/4000k/3000k	THD	< 15%
Luminous Flux	1100lm	Frequency Range	50/60HZ
Input Voltage	AC100~277V	Lnstallation Pipe Diameter	/
Protection Grade	IP65	CRI	> 90
Operating Temperature	-30~50℃		

DM-CR43a

Standard colours

9004 9006 9007 9016

Bollard light

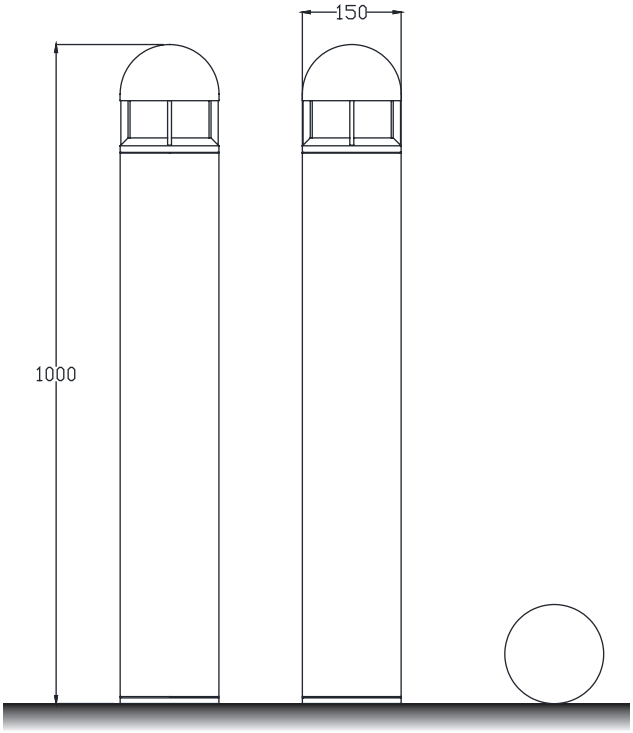

Installation plate

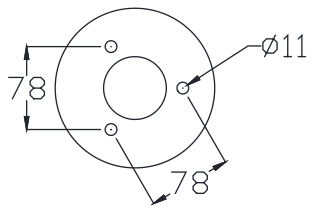

DM-CR44a

Colo(u)r temperature

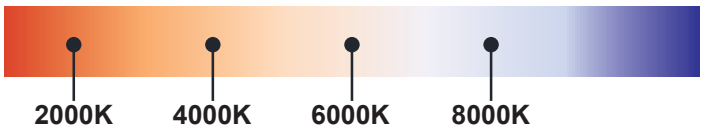

Bollard light

IP65

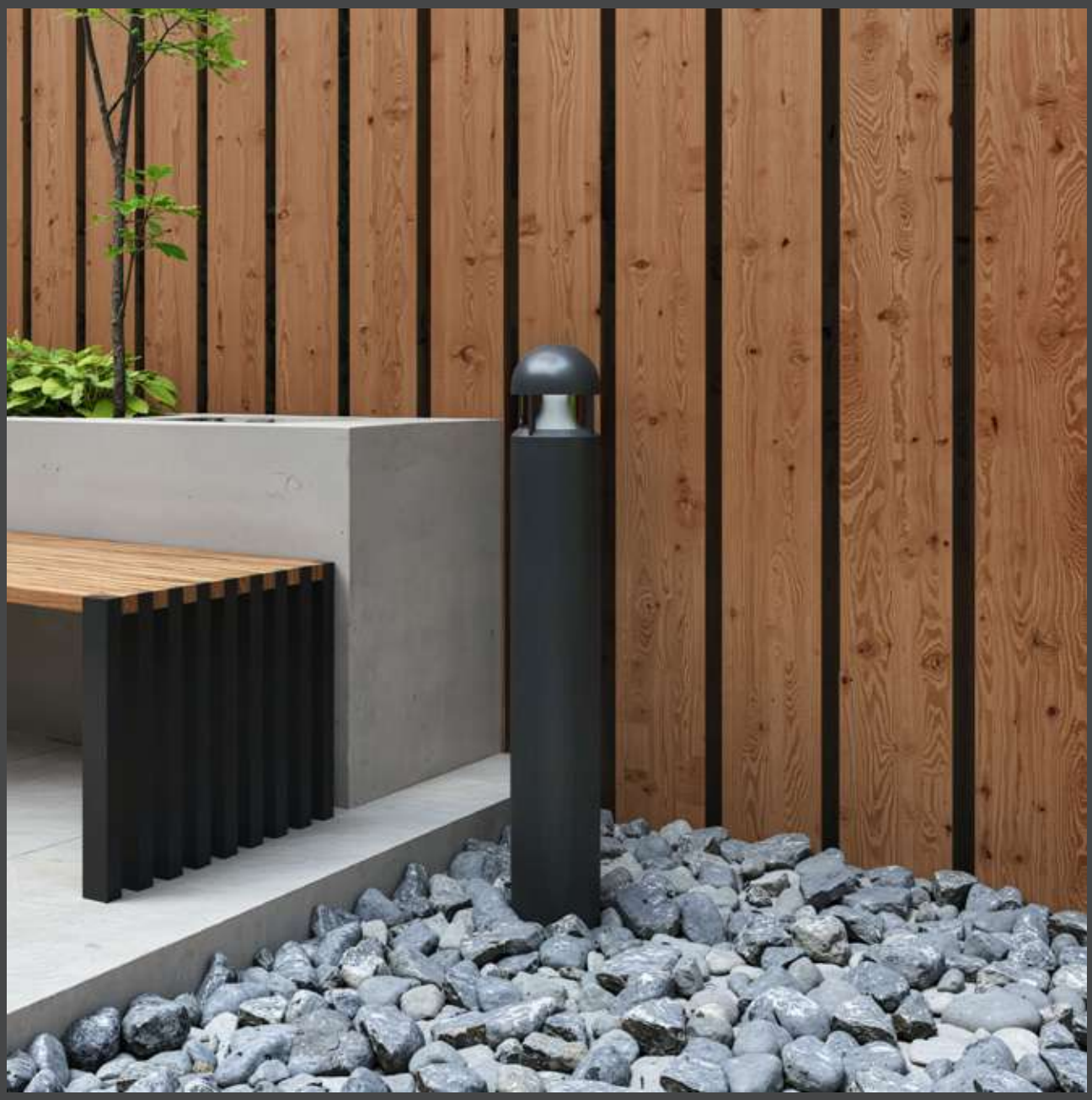

Rated power	12W	Power Factor	> 0.9
LED Quantity	12pcs	Life	> 50000H
Color Temperature	6000k/4000k/3000k	THD	< 15%
Luminous Flux	1100lm	Frequency Range	50/60HZ
Input Voltage	AC100~277V	Lnstallation Pipe Diameter	/
Protection Grade	IP65	CRI	> 90
Operating Temperature	-30~50℃		

DM-CR44a

Standard colours

9004 9006 9007 9016

Bollard light

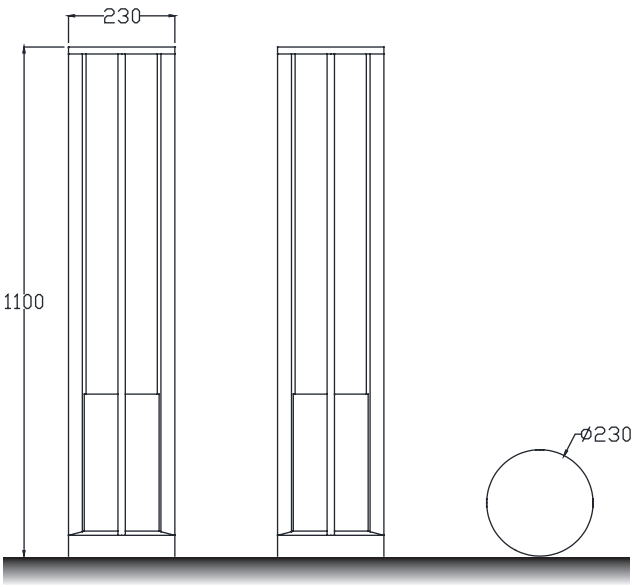

Installation plate

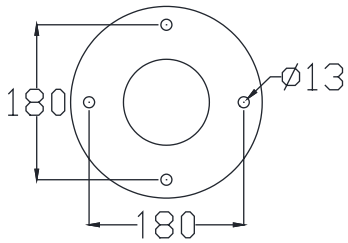

DM-CR45a

Colo(u)r temperature

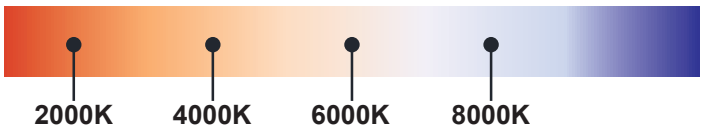

Bollard light

IP65

Rated power	12W	Power Factor	> 0.9
LED Quantity	12pcs	Life	> 50000H
Color Temperature	6000k/4000k/3000k	THD	< 15%
Luminous Flux	1100lm	Frequency Range	50/60HZ
Input Voltage	AC100~277V	Lnstallation Pipe Diameter	/
Protection Grade	IP65	CRI	> 90
Operating Temperature	-30~50℃		

DM-CR45a

Standard colours

9004 9006 9007 9016

Bollard light

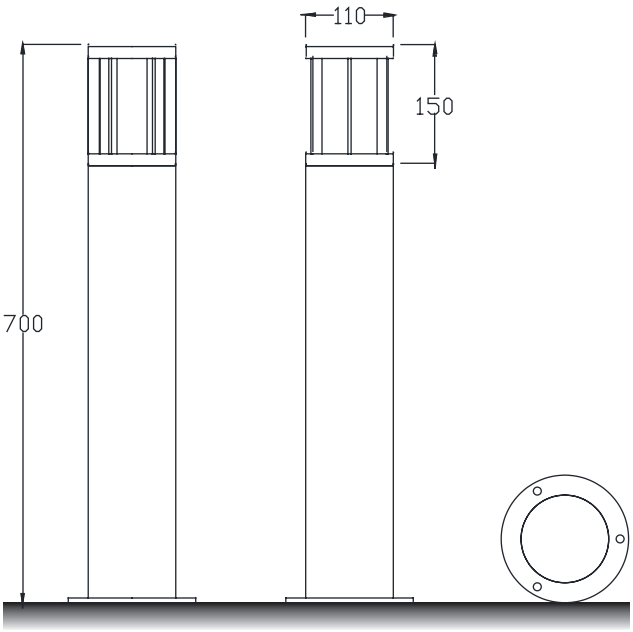

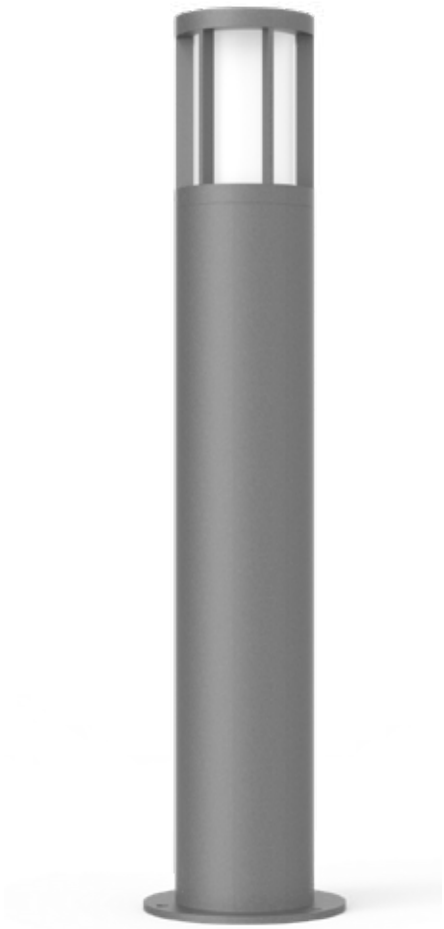

Installation plate

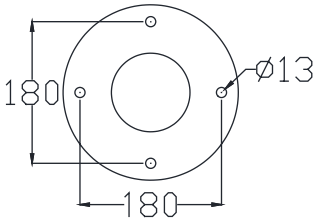

DM-CR46a

Colo(u)r temperature

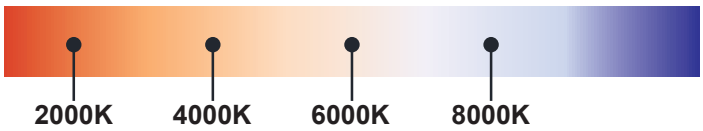

Bollard light

IP65

Rated power	12W	Power Factor	> 0.9
LED Quantity	12pcs	Life	> 50000H
Color Temperature	6000k/4000k/3000k	THD	< 15%
Luminous Flux	1100lm	Frequency Range	50/60HZ
Input Voltage	AC100~277V	Lnstallation Pipe Diameter	/
Protection Grade	IP65	CRI	> 90
Operating Temperature	-30~50℃		

DM-CR46a

Standard colours

9004 9006 9007 9016

Bollard light

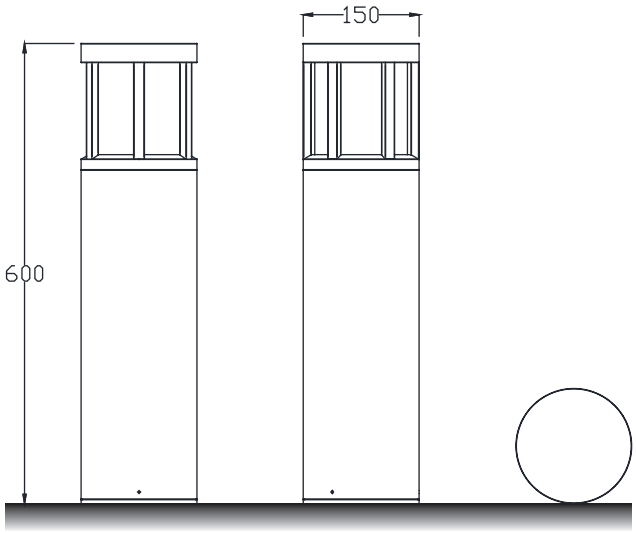

Installation plate

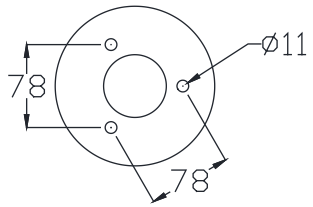

DM-CR47a

Colo(u)r temperature

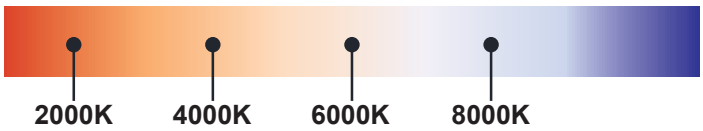

Bollard light

IP65

Rated power	12W	Power Factor	> 0.9
LED Quantity	12pcs	Life	> 50000H
Color Temperature	6000k/4000k/3000k	THD	< 15%
Luminous Flux	1100lm	Frequency Range	50/60HZ
Input Voltage	AC100~277V	Lnstallation Pipe Diameter	/
Protection Grade	IP65	CRI	> 90
Operating Temperature	-30~50℃		

DM-CR47a

Standard colours

9004 9006 9007 9016

Bollard light

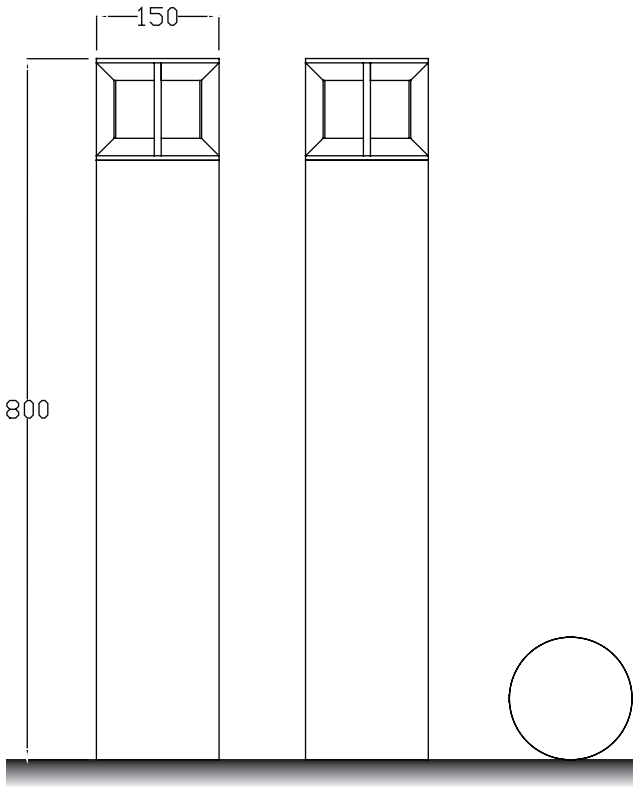

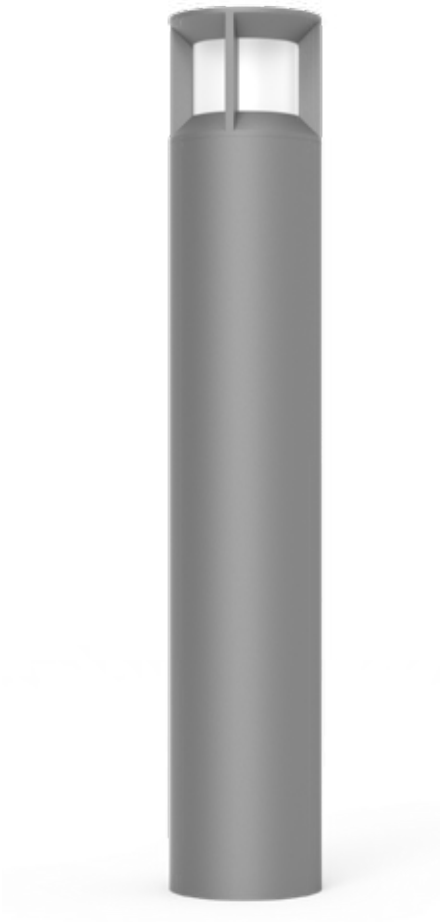

Installation plate

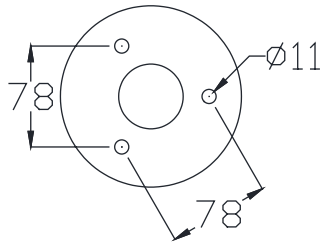

DM-CR48a

Colo(u)r temperature

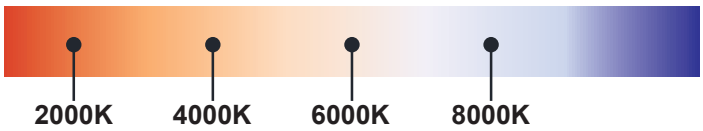

Bollard light

IP65

Rated power	12W	Power Factor	> 0.9
LED Quantity	12pcs	Life	> 50000H
Color Temperature	6000k/4000k/3000k	THD	< 15%
Luminous Flux	1100lm	Frequency Range	50/60HZ
Input Voltage	AC100~277V	Lnstallation Pipe Diameter	/
Protection Grade	IP65	CRI	> 90
Operating Temperature	-30~50℃		

DM-CR48a

Standard colours

9004 9006 9007 9016

Bollard light

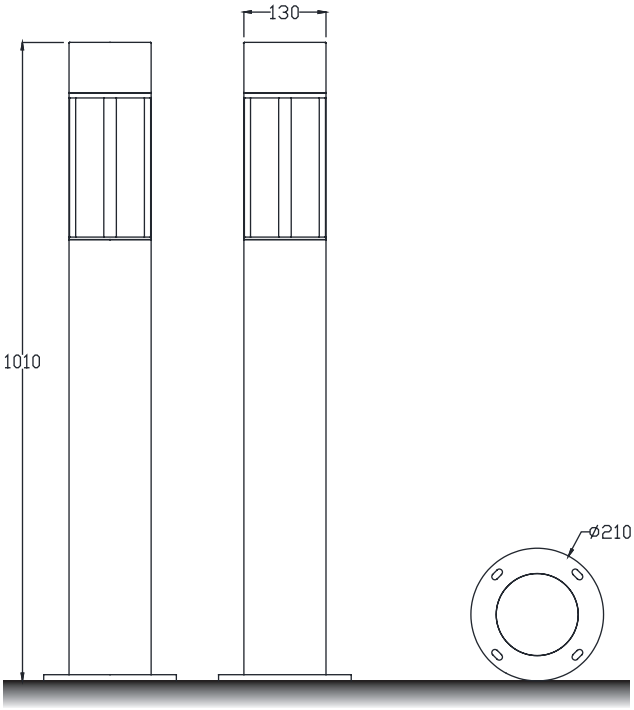

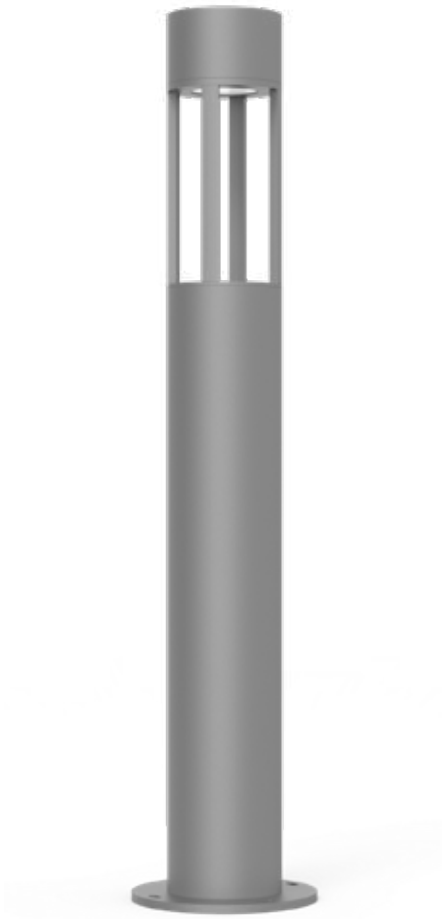

Installation plate

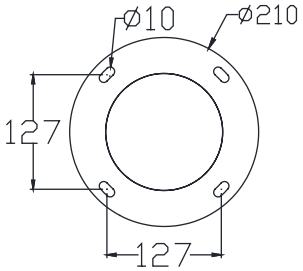

DM-CR49a

Colo(u)r temperature

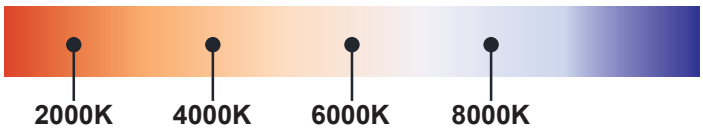

Bollard light

IP65

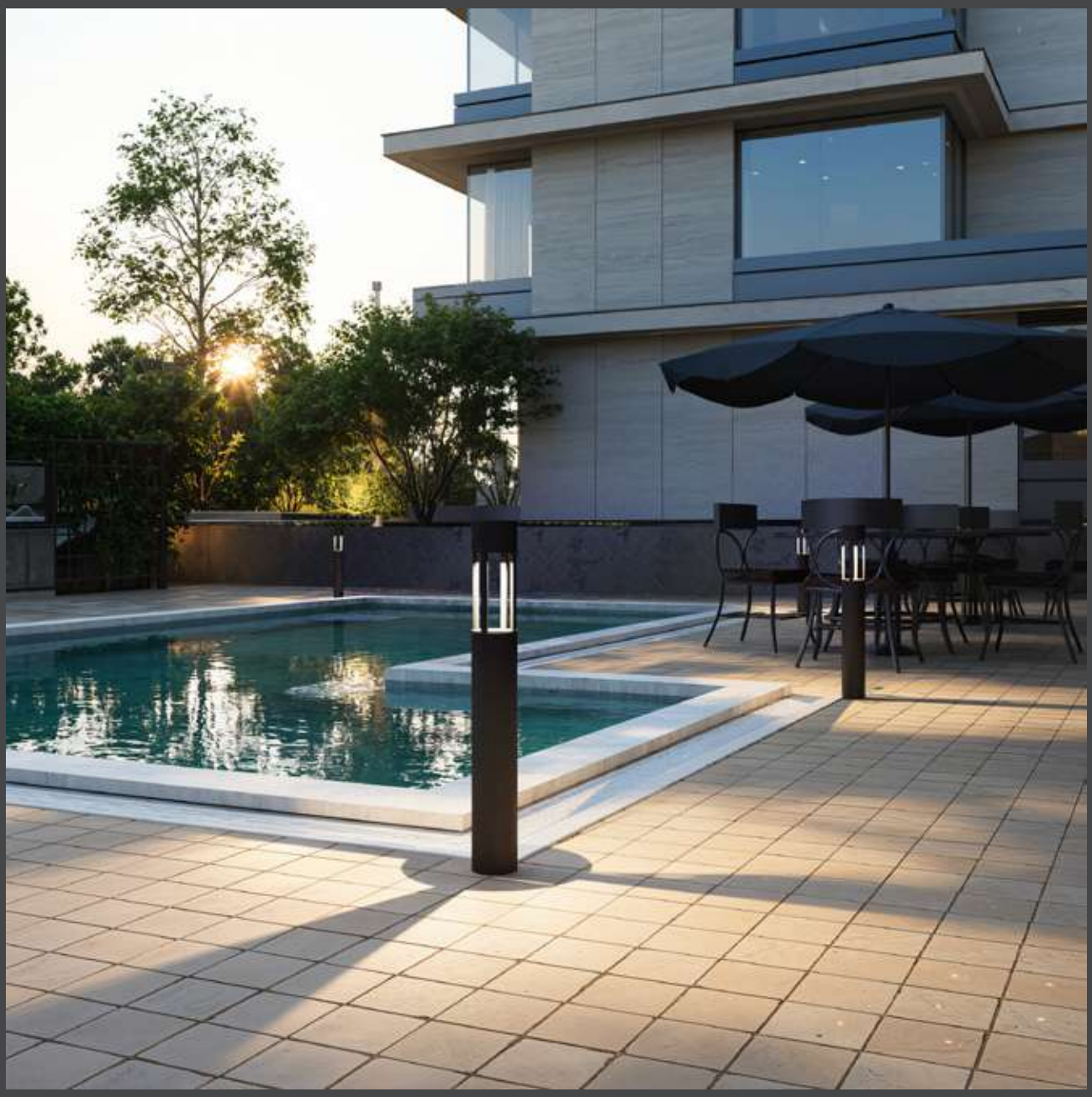

Rated power	12W	Power Factor	> 0.9
LED Quantity	12pcs	Life	> 50000H
Color Temperature	6000k/4000k/3000k	THD	< 15%
Luminous Flux	1100lm	Frequency Range	50/60HZ
Input Voltage	AC100~277V	Lnstallation Pipe Diameter	/
Protection Grade	IP65	CRI	> 90
Operating Temperature	-30~50℃		

DM-CR49a

Standard colours

9004 9006 9007 9016

Bollard light

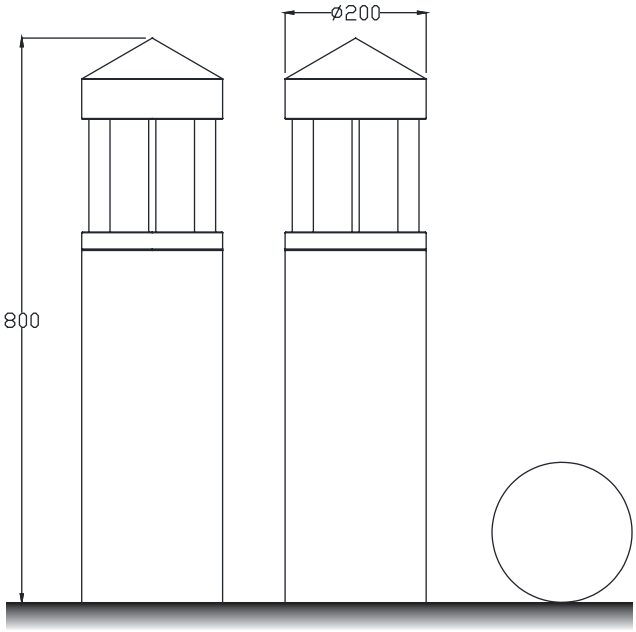

Installation plate

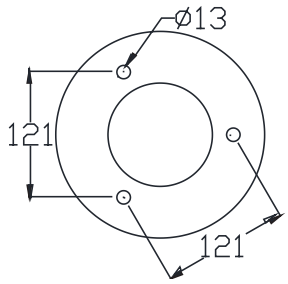

DM-CR50a

Colo(u)r temperature

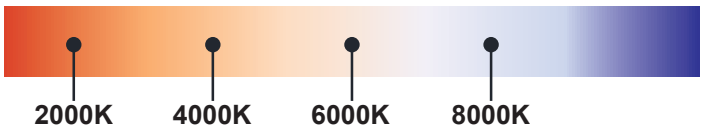

Bollard light

IP65

Rated power	12W	Power Factor	> 0.9
LED Quantity	12pcs	Life	> 50000H
Color Temperature	6000k/4000k/3000k	THD	< 15%
Luminous Flux	1100lm	Frequency Range	50/60HZ
Input Voltage	AC100~277V	Lnstallation Pipe Diameter	/
Protection Grade	IP65	CRI	> 90
Operating Temperature	-30~50℃		

DM-CR50a

Standard colours

9004 9006 9007 9016

Bollard light

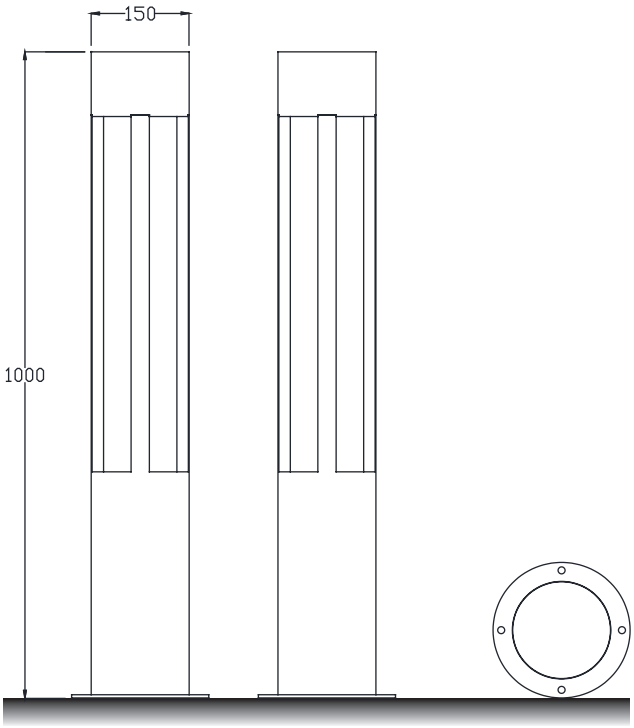

Installation plate

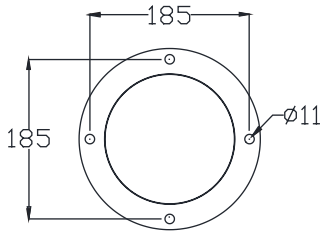

DM-CR51a

Colo(u)r temperature

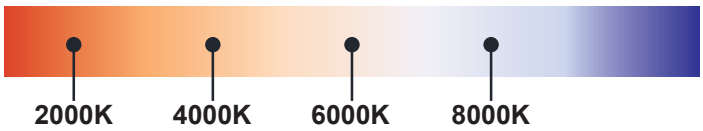

Bollard light

IP65

Rated power	12W	Power Factor	> 0.9
LED Quantity	12pcs	Life	> 50000H
Color Temperature	6000k/4000k/3000k	THD	< 15%
Luminous Flux	1100lm	Frequency Range	50/60HZ
Input Voltage	AC100~277V	Lnstallation Pipe Diameter	/
Protection Grade	IP65	CRI	> 90
Operating Temperature	-30~50℃		

DM-CR51a

Standard colours

9004 9006 9007 9016

Bollard light

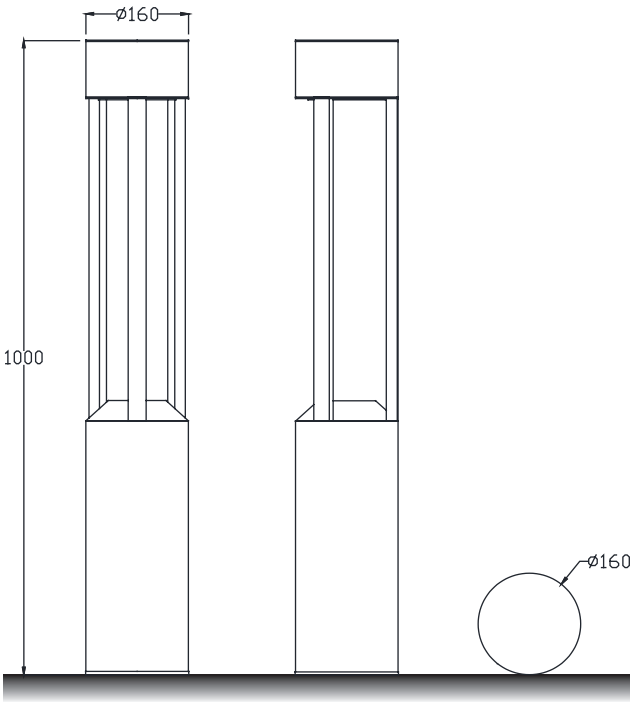

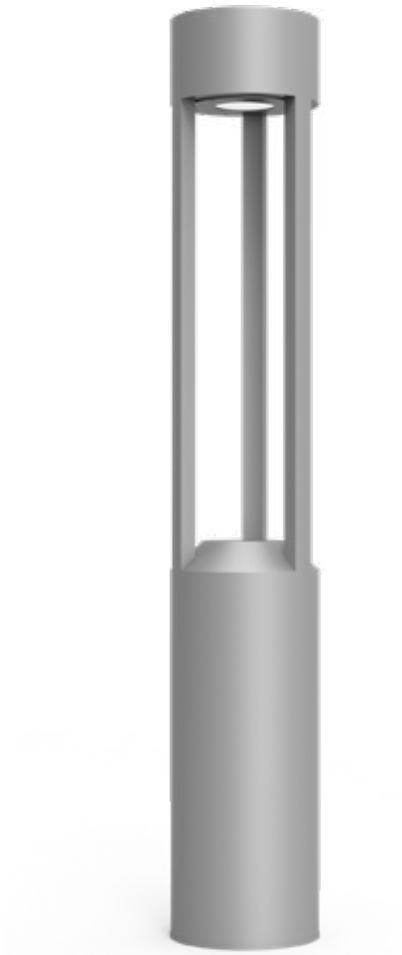

Installation plate

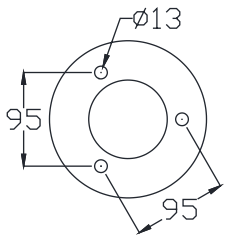

DM-CR51b

Colo(u)r temperature

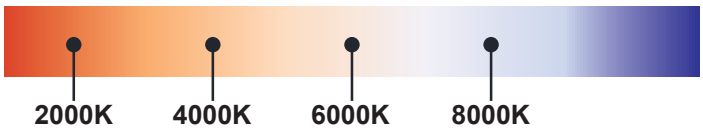

Bollard light

IP65

Rated power	12W	Power Factor	> 0.9
LED Quantity	12pcs	Life	> 50000H
Color Temperature	6000k/4000k/3000k	THD	< 15%
Luminous Flux	1100lm	Frequency Range	50/60HZ
Input Voltage	AC100~277V	Lnstallation Pipe Diameter	/
Protection Grade	IP65	CRI	> 90
Operating Temperature	-30~50℃		

DM-CR51b

Standard colours

9004 9006 9007 9016

Bollard light

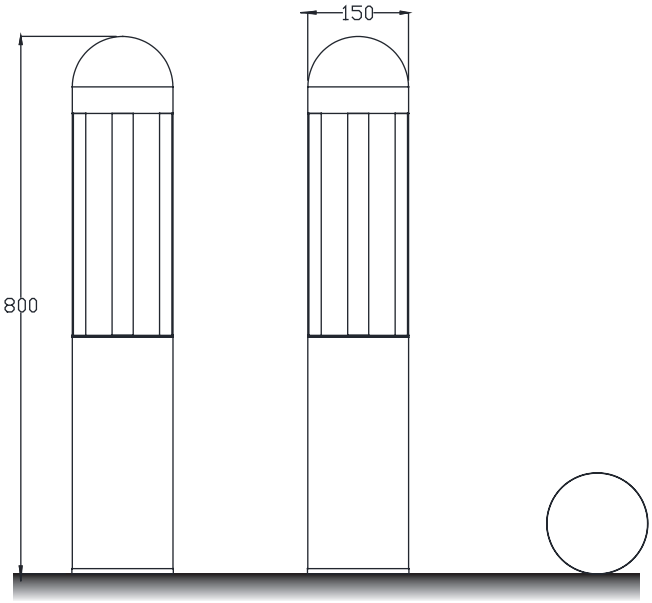

Installation plate

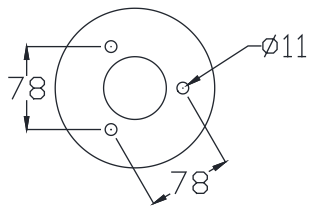

DM-CR52a

Colo(u)r temperature

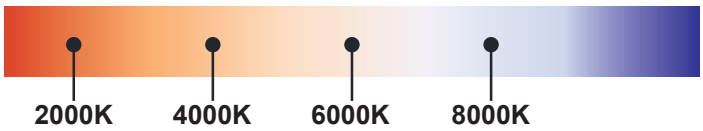

Bollard light

IP65

Rated power	12W	Power Factor	> 0.9
LED Quantity	12pcs	Life	> 50000H
Color Temperature	6000k/4000k/3000k	THD	< 15%
Luminous Flux	1100lm	Frequency Range	50/60HZ
Input Voltage	AC100~277V	Lnstallation Pipe Diameter	/
Protection Grade	IP65	CRI	> 90
Operating Temperature	-30~50℃		

DM-CR52a

Standard colours

9004 9006 9007 9016

Bollard light

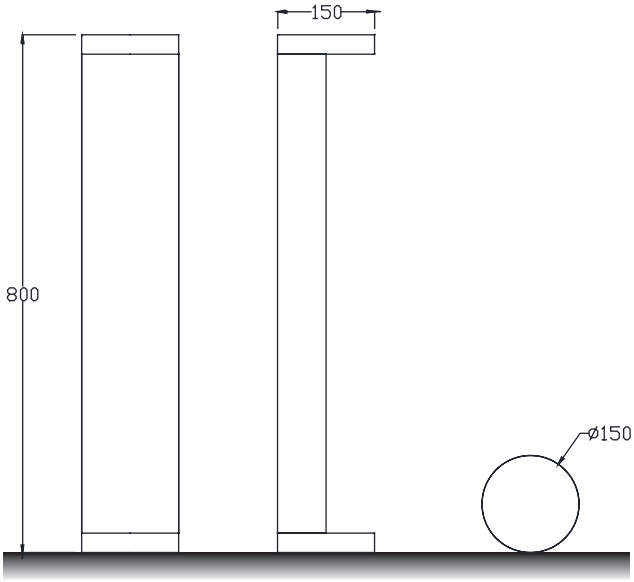

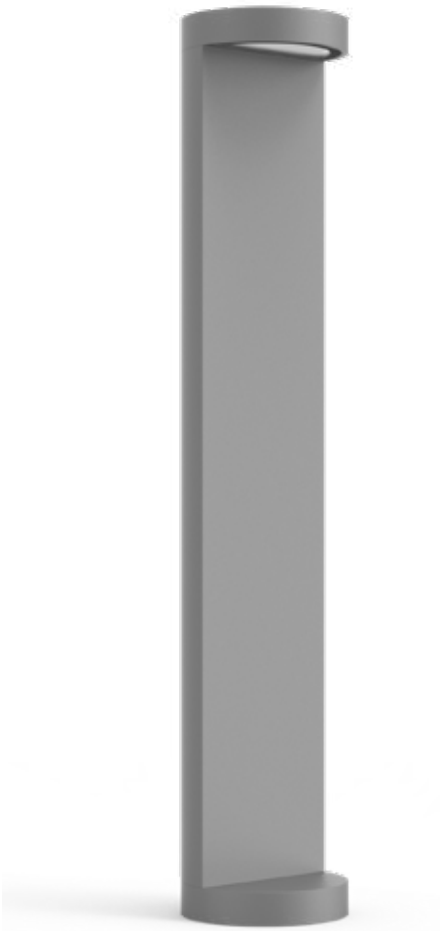

Installation plate

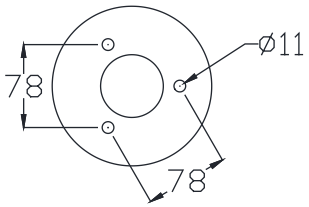

DM-CR53a

Colo(u)r temperature

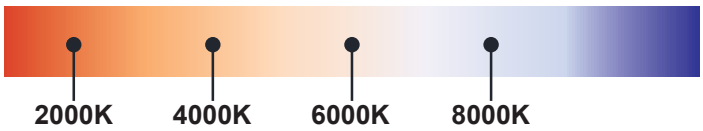

Bollard light

IP65

Rated power	12W	Power Factor	> 0.9
LED Quantity	12pcs	Life	> 50000H
Color Temperature	6000k/4000k/3000k	THD	< 15%
Luminous Flux	1100lm	Frequency Range	50/60HZ
Input Voltage	AC100~277V	Lnstallation Pipe Diameter	/
Protection Grade	IP65	CRI	> 90
Operating Temperature	-30~50℃		

DM-CR53a

Standard colours

9004 9006 9007 9016

Bollard light

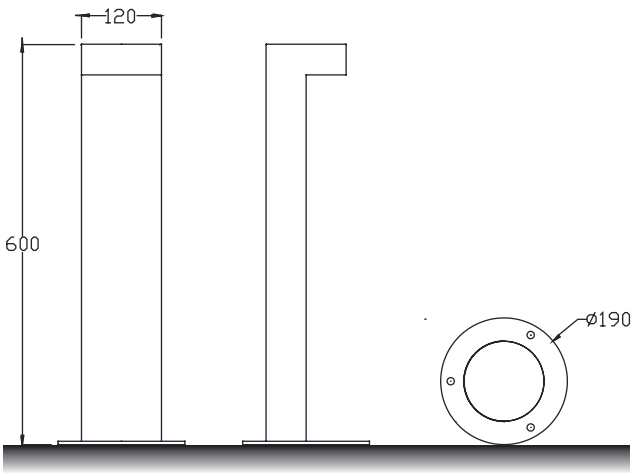

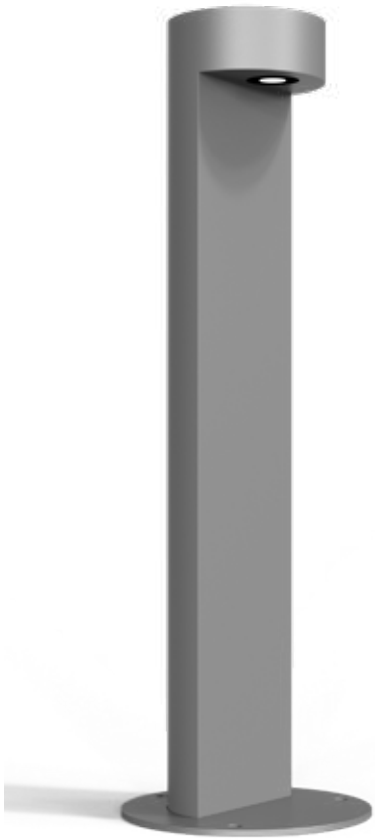

Installation plate

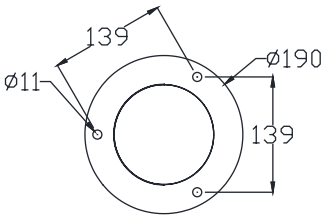

DM-CR54a

Colo(u)r temperature

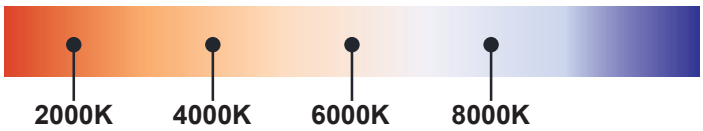

Bollard light

IP65

Rated power	12W	Power Factor	> 0.9
LED Quantity	12pcs	Life	> 50000H
Color Temperature	6000k/4000k/3000k	THD	< 15%
Luminous Flux	1100lm	Frequency Range	50/60HZ
Input Voltage	AC100~277V	Lnstallation Pipe Diameter	/
Protection Grade	IP65	CRI	> 90
Operating Temperature	-30~50℃		

DM-CR54a

Standard colours

9004 9006 9007 9016

Bollard light

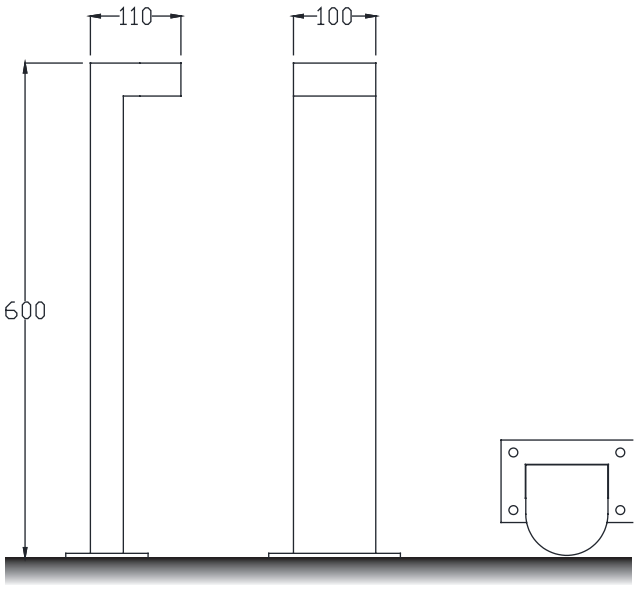

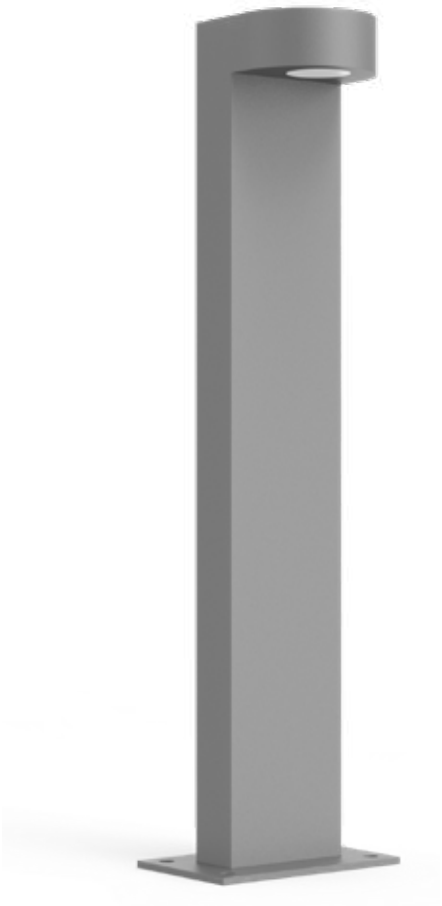

Installation plate

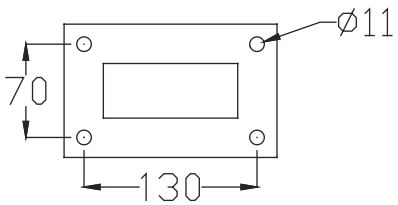

DM-CR55a

Colo(u)r temperature

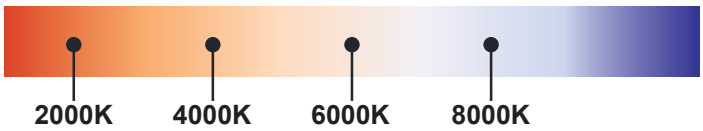

Bollard light

IP65

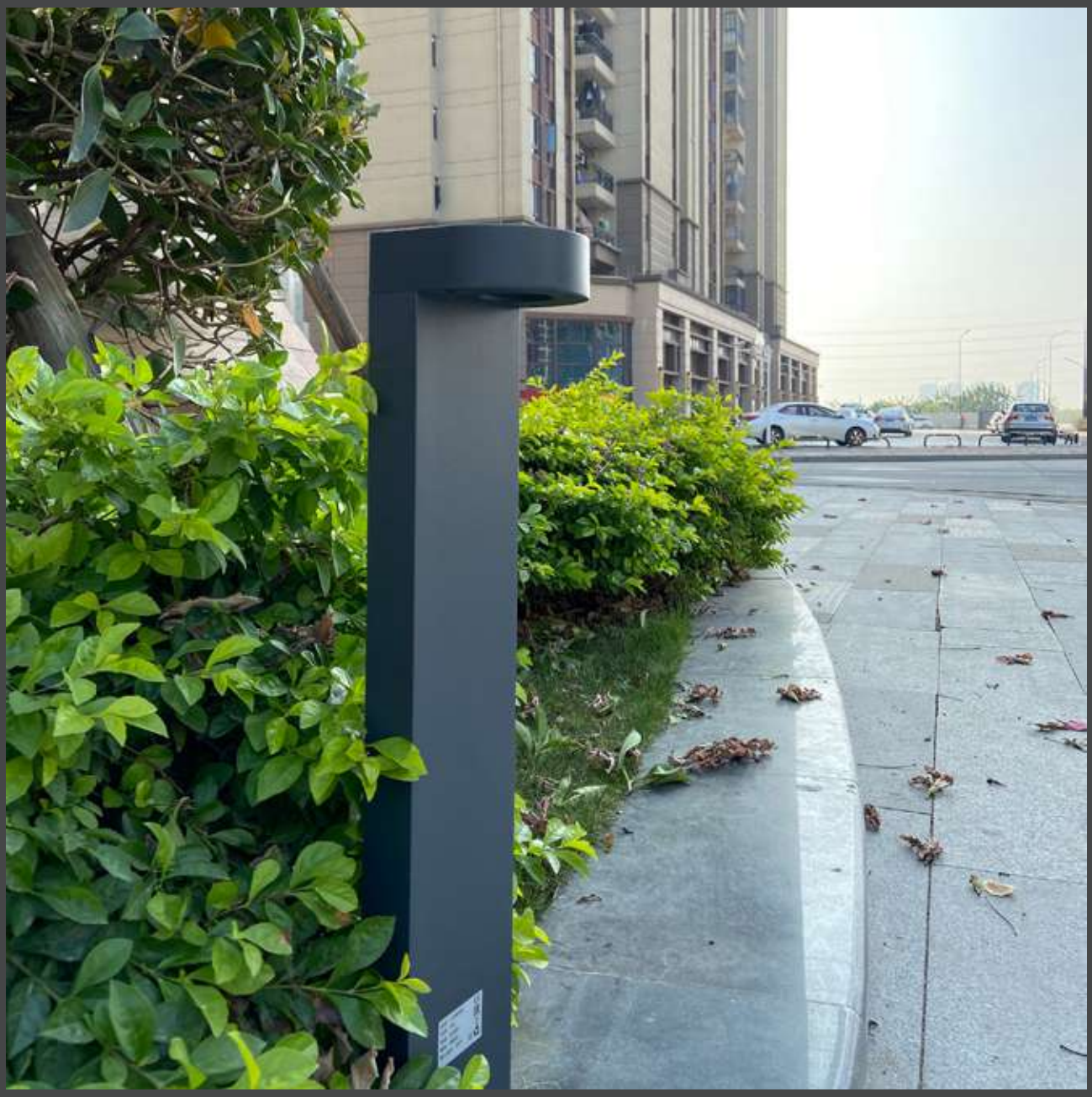

Rated power	12W	Power Factor	> 0.9
LED Quantity	12pcs	Life	> 50000H
Color Temperature	6000k/4000k/3000k	THD	< 15%
Luminous Flux	1100lm	Frequency Range	50/60HZ
Input Voltage	AC100~277V	Lnstallation Pipe Diameter	/
Protection Grade	IP65	CRI	> 90
Operating Temperature	-30~50℃		

DM-CR55a

Standard colours

9004 9006 9007 9016

Bollard light

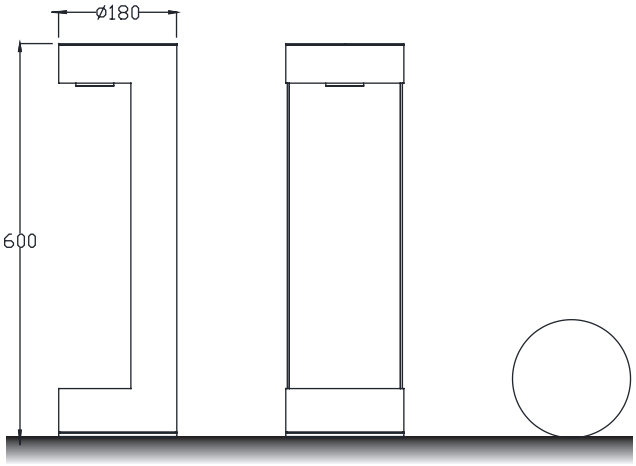

Installation plate

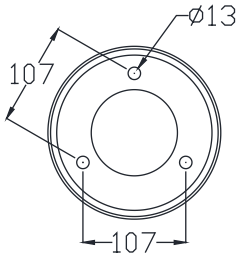

DM-CR56a

Colo(u)r temperature

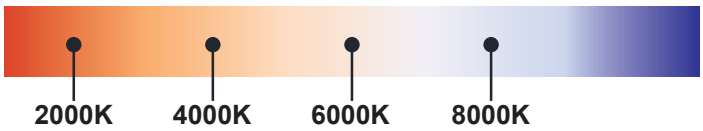

Bollard light

IP65

Rated power	12W	Power Factor	> 0.9
LED Quantity	12pcs	Life	> 50000H
Color Temperature	6000k/4000k/3000k	THD	< 15%
Luminous Flux	1100lm	Frequency Range	50/60HZ
Input Voltage	AC100~277V	Lnstallation Pipe Diameter	/
Protection Grade	IP65	CRI	> 90
Operating Temperature	-30~50℃		

DM-CR56a

Standard colours

9004 9006 9007 9016

Bollard light

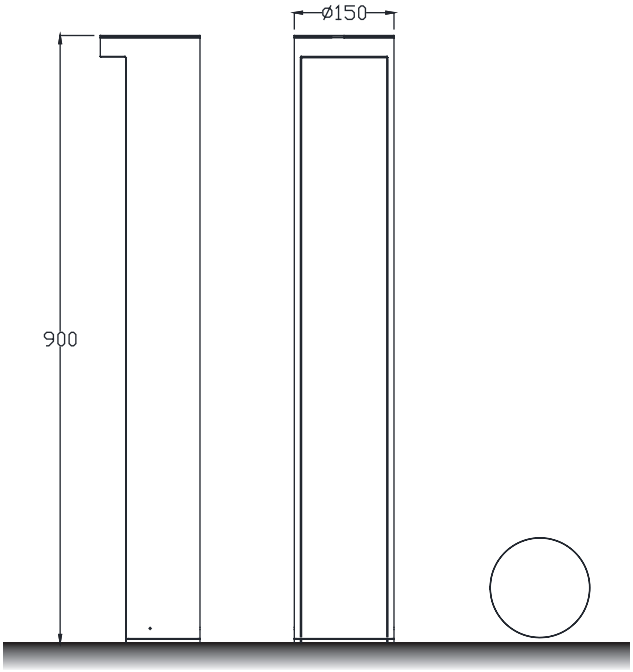

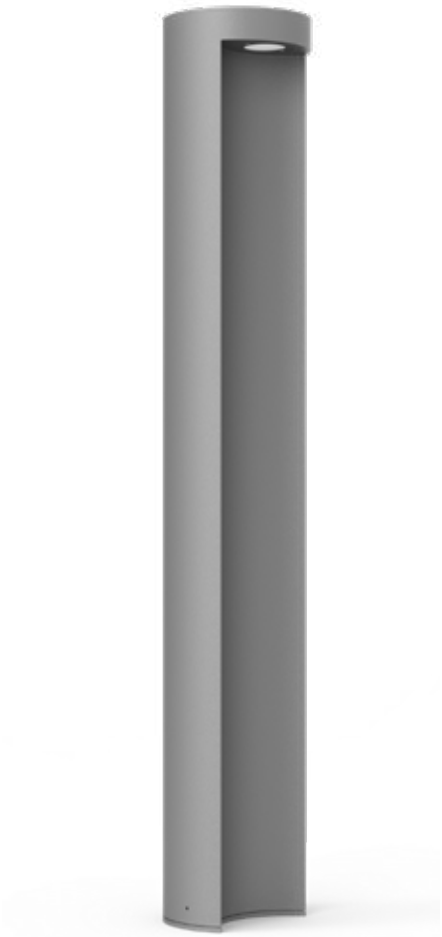

Installation plate

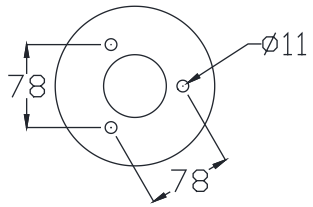

DM-CR57a

Colo(u)r temperature

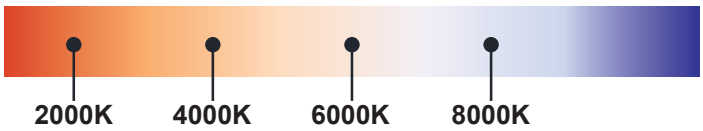

Bollard light

IP65

Rated power	12W	Power Factor	> 0.9
LED Quantity	12pcs	Life	> 50000H
Color Temperature	6000k/4000k/3000k	THD	< 15%
Luminous Flux	1100lm	Frequency Range	50/60HZ
Input Voltage	AC100~277V	Lnstallation Pipe Diameter	/
Protection Grade	IP65	CRI	> 90
Operating Temperature	-30~50℃		

DM-CR57a

Standard colours

9004 9006 9007 9016

Bollard light

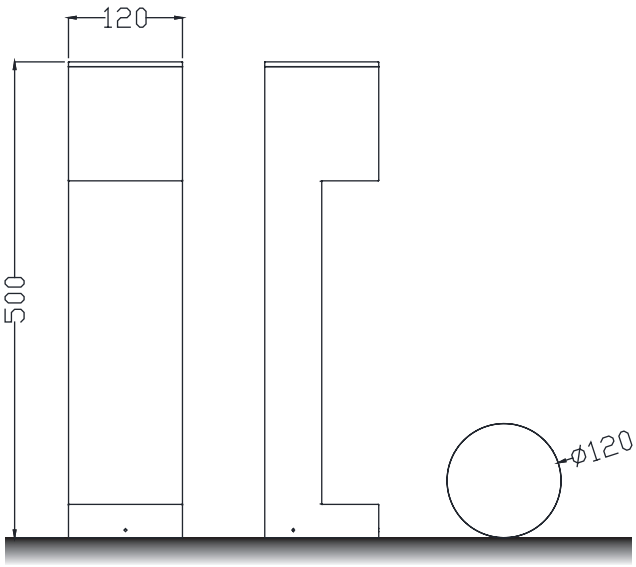

Installation plate

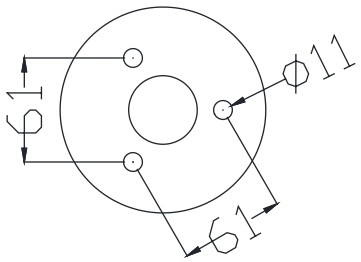

DM-CR58a

Colo(u)r temperature

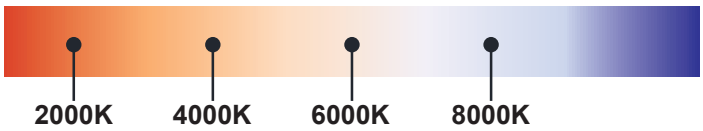

Bollard light

IP65

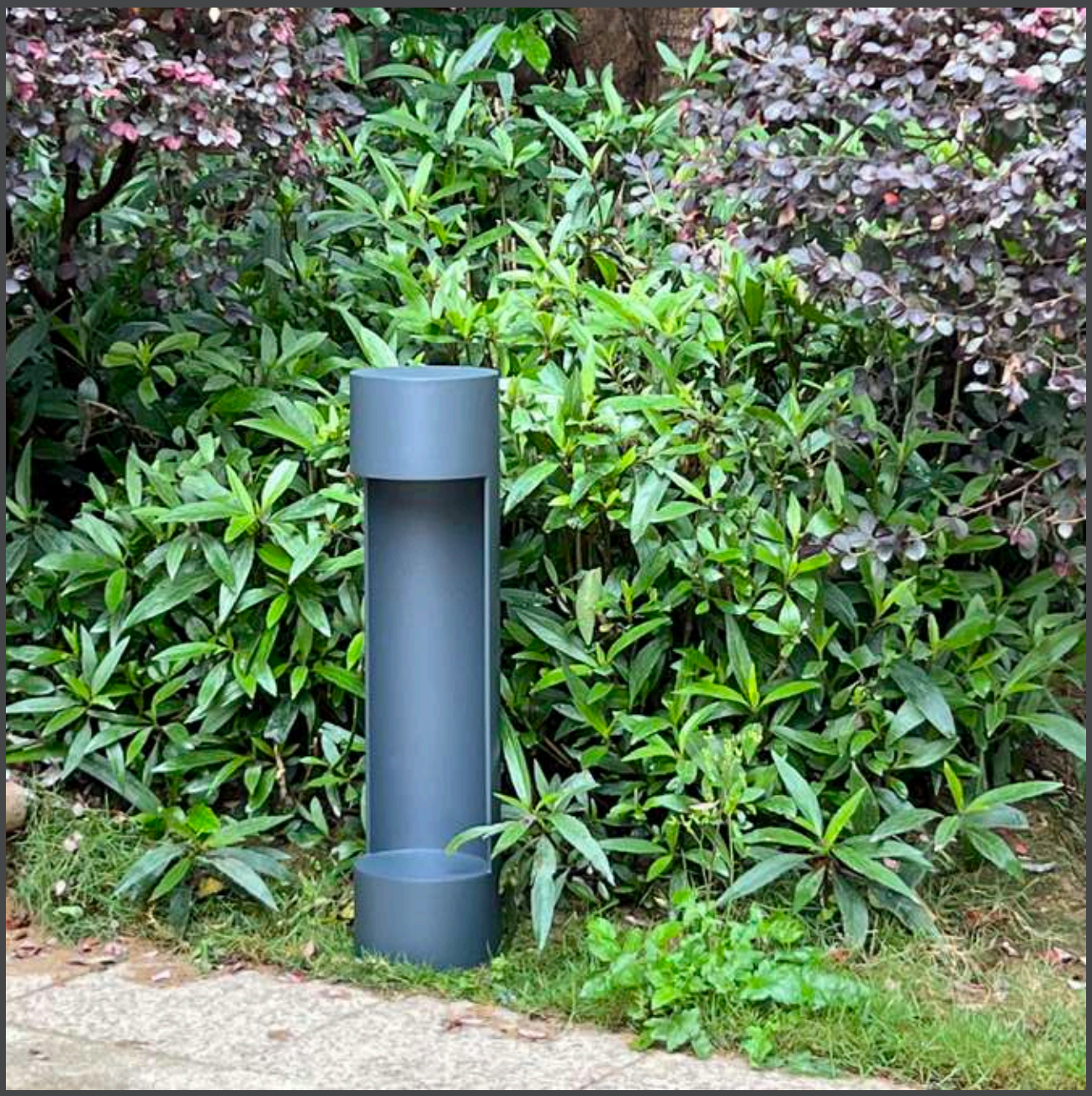

Rated power	12W	Power Factor	> 0.9
LED Quantity	12pcs	Life	> 50000H
Color Temperature	6000k/4000k/3000k	THD	< 15%
Luminous Flux	1100lm	Frequency Range	50/60HZ
Input Voltage	AC100~277V	Lnstallation Pipe Diameter	/
Protection Grade	IP65	CRI	> 90
Operating Temperature	-30~50℃		

DM-CR58a

Standard colours

9004 9006 9007 9016

Bollard light

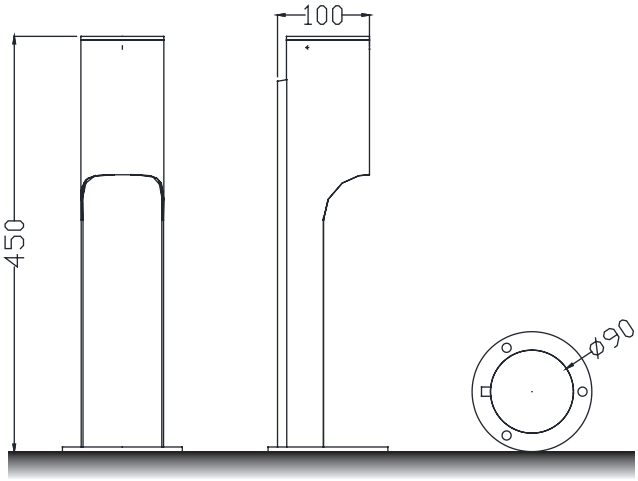

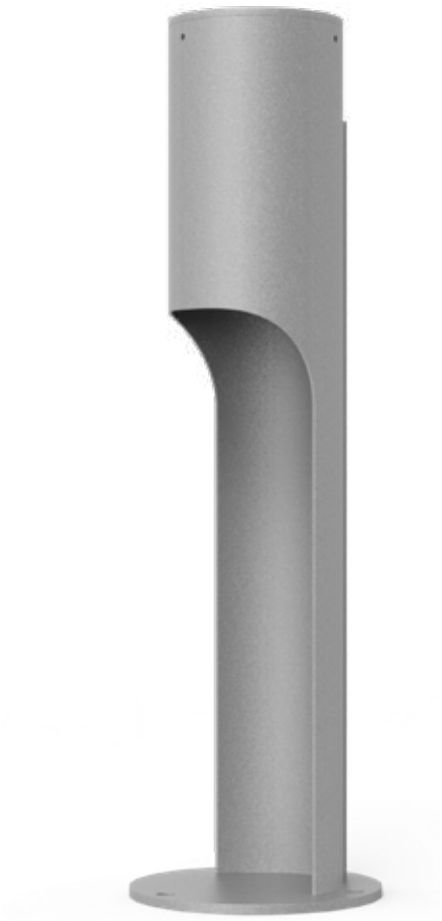

Installation plate

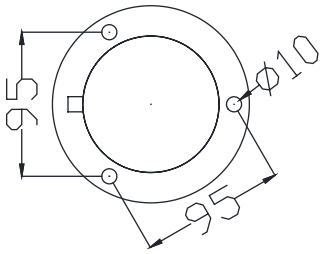

DM-CR59a

Colo(u)r temperature

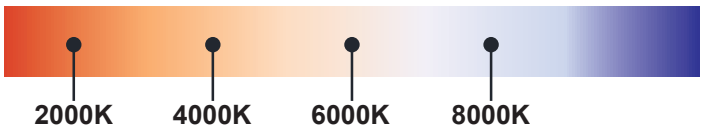

Bollard light

IP65

Rated power	12W	Power Factor	> 0.9
LED Quantity	12pcs	Life	> 50000H
Color Temperature	6000k/4000k/3000k	THD	< 15%
Luminous Flux	1100lm	Frequency Range	50/60HZ
Input Voltage	AC100~277V	Lnstallation Pipe Diameter	/
Protection Grade	IP65	CRI	> 90
Operating Temperature	-30~50℃		

DM-CR59a

Standard colours

9004 9006 9007 9016

Bollard light

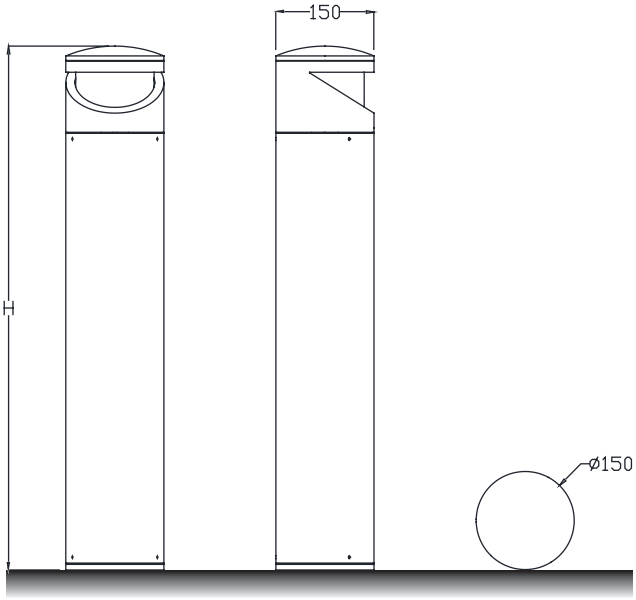

Installation plate

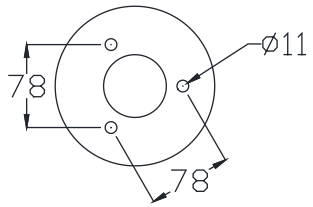

DM-CR60a

Colo(u)r temperature

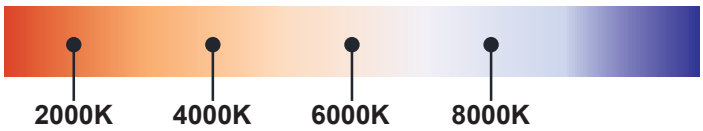

Bollard light

IP65

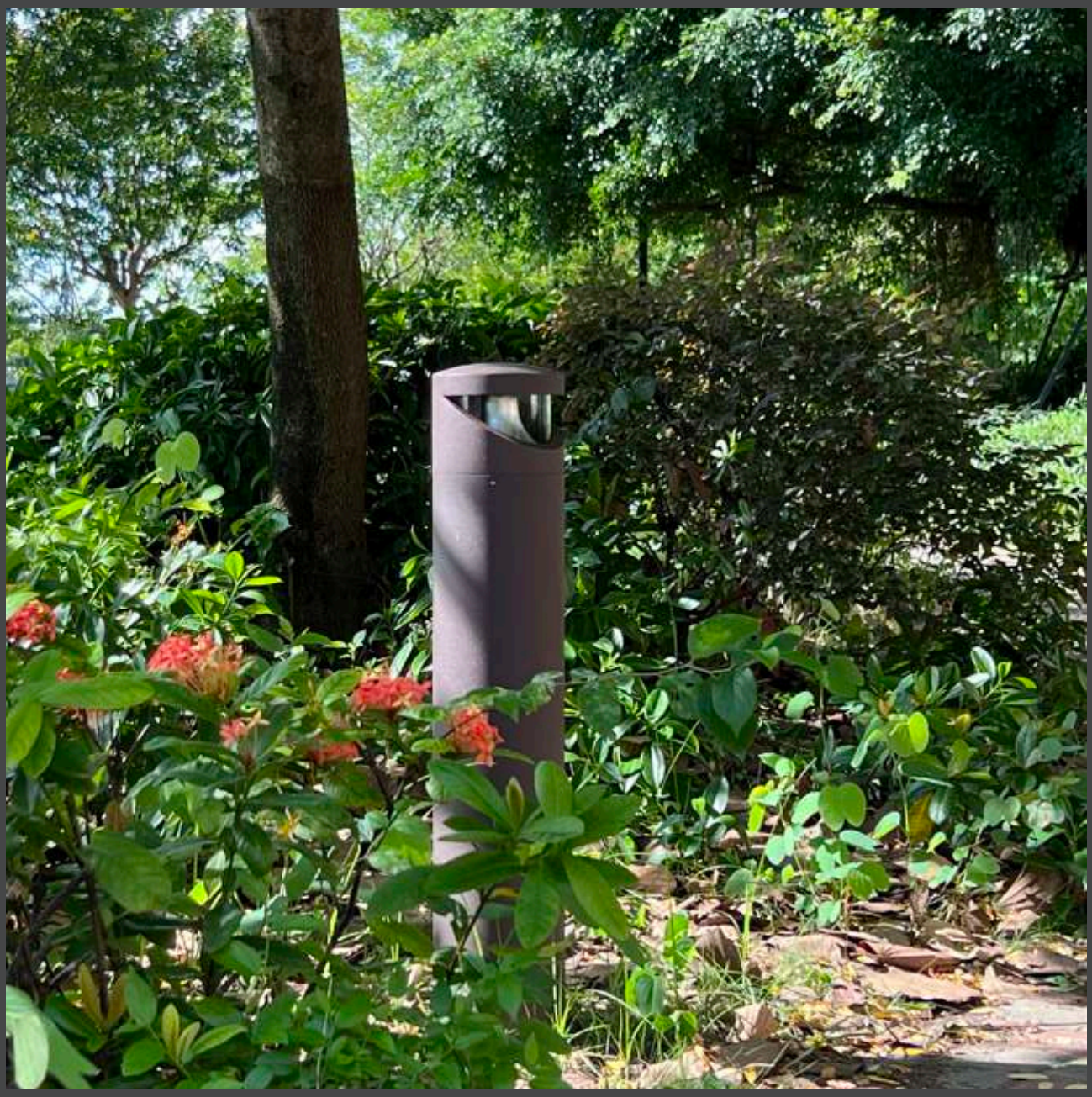

Rated power	12W	Power Factor	> 0.9
LED Quantity	12pcs	Life	> 50000H
Color Temperature	6000k/4000k/3000k	THD	< 15%
Luminous Flux	1100lm	Frequency Range	50/60HZ
Input Voltage	AC100~277V	Lnstallation Pipe Diameter	/
Protection Grade	IP65	CRI	> 90
Operating Temperature	-30~50℃		

DM-CR60a

Standard colours

9004 9006 9007 9016

Bollard light

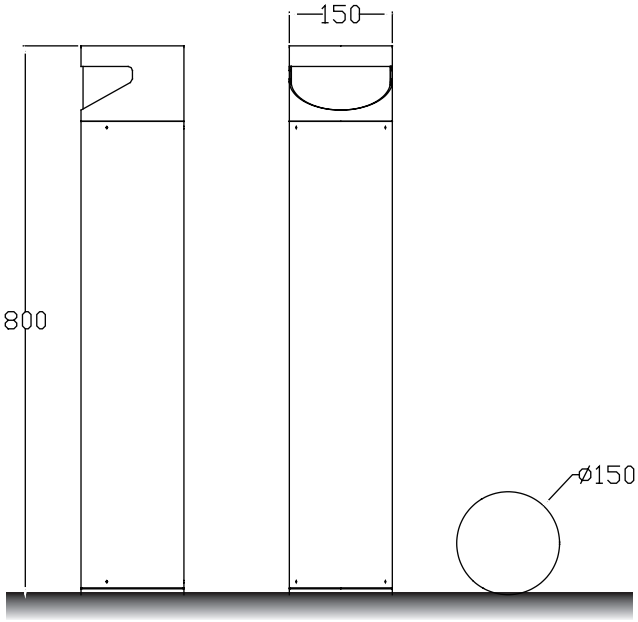

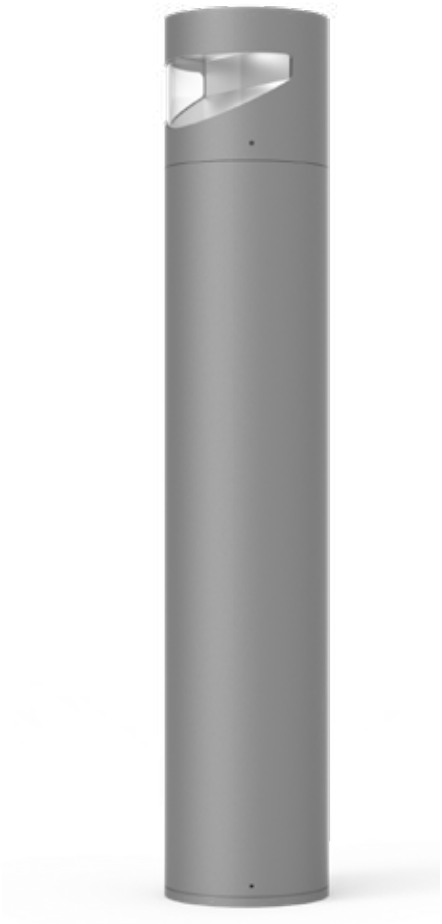

Installation plate

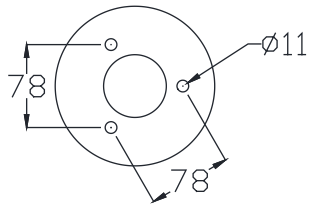

DM-CR61a

Colo(u)r temperature

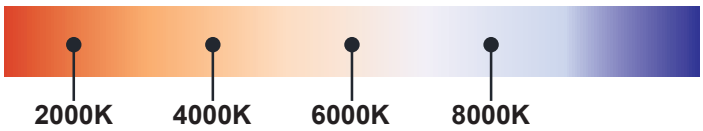

Bollard light

IP65

Rated power	12W	Power Factor	> 0.9
LED Quantity	12pcs	Life	> 50000H
Color Temperature	6000k/4000k/3000k	THD	< 15%
Luminous Flux	1100lm	Frequency Range	50/60HZ
Input Voltage	AC100~277V	Lnstallation Pipe Diameter	/
Protection Grade	IP65	CRI	> 90
Operating Temperature	-30~50℃		

DM-CR61a

Standard colours

9004 9006 9007 9016

Bollard light

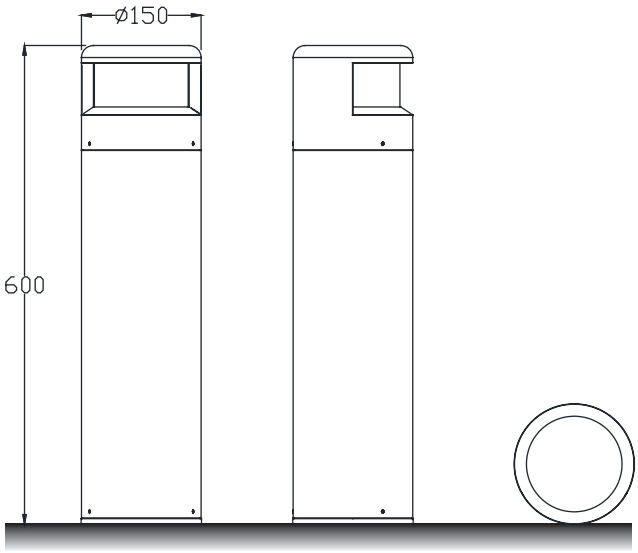

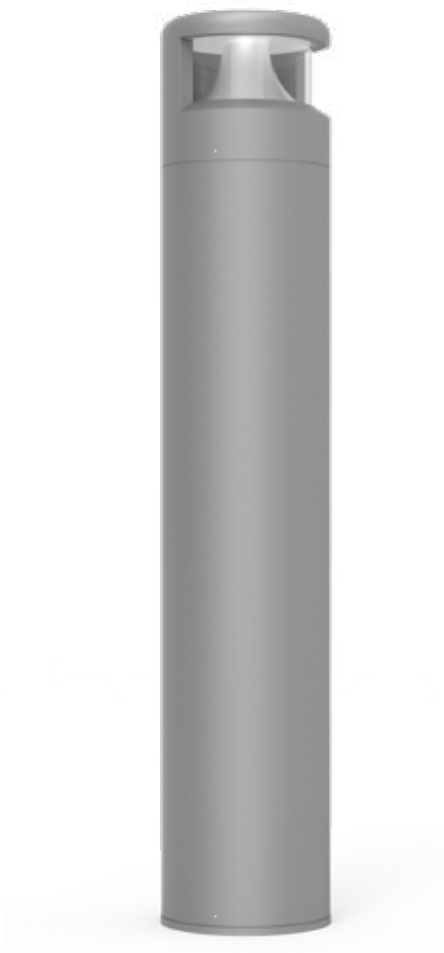

Installation plate

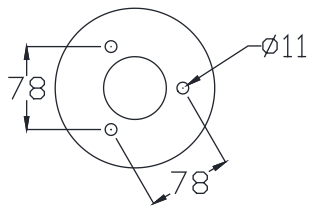

DM-CR62a

Colo(u)r temperature

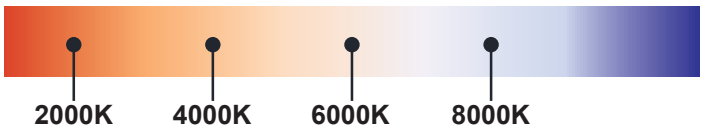

Bollard light

IP65

Rated power	12W	Power Factor	> 0.9
LED Quantity	12pcs	Life	> 50000H
Color Temperature	6000k/4000k/3000k	THD	< 15%
Luminous Flux	1100lm	Frequency Range	50/60HZ
Input Voltage	AC100~277V	Lnstallation Pipe Diameter	/
Protection Grade	IP65	CRI	> 90
Operating Temperature	-30~50℃		

DM-CR62a

Standard colours

9004 9006 9007 9016

Bollard light

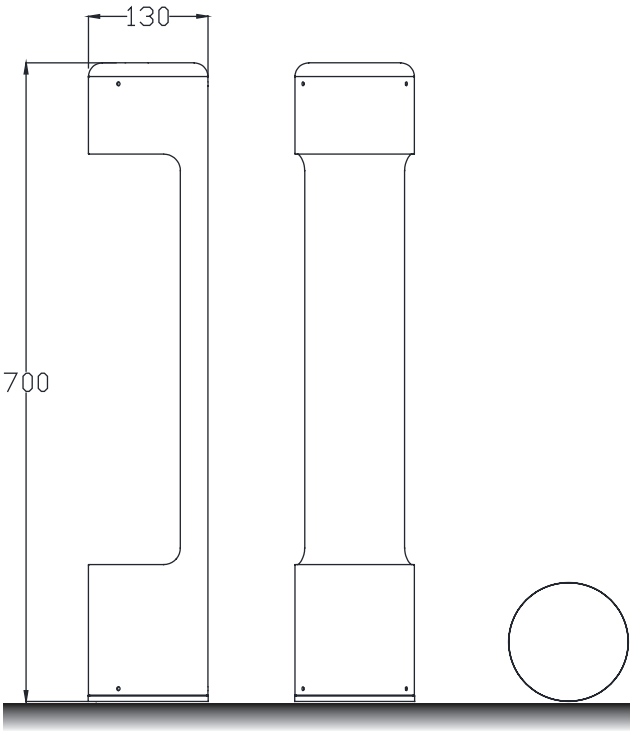

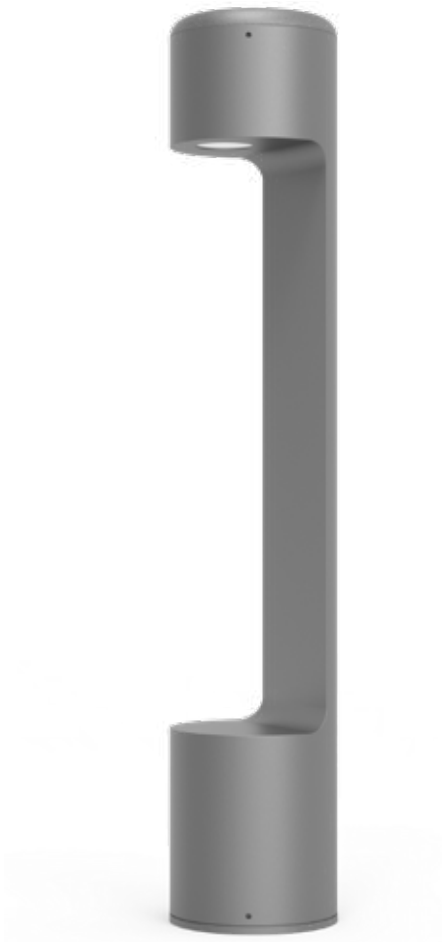

Installation plate

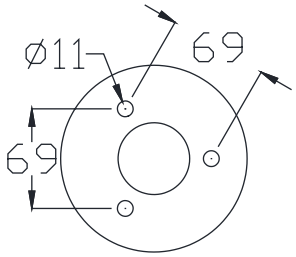

DM-CR63a

Colo(u)r temperature

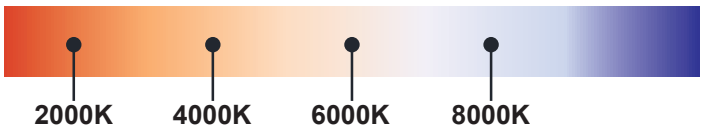

Bollard light

IP65

Rated power	12W	Power Factor	> 0.9
LED Quantity	12pcs	Life	> 50000H
Color Temperature	6000k/4000k/3000k	THD	< 15%
Luminous Flux	1100lm	Frequency Range	50/60HZ
Input Voltage	AC100~277V	Lnstallation Pipe Diameter	/
Protection Grade	IP65	CRI	> 90
Operating Temperature	-30~50℃		

DM-CR63a

Standard colours

9004 9006 9007 9016

Bollard light

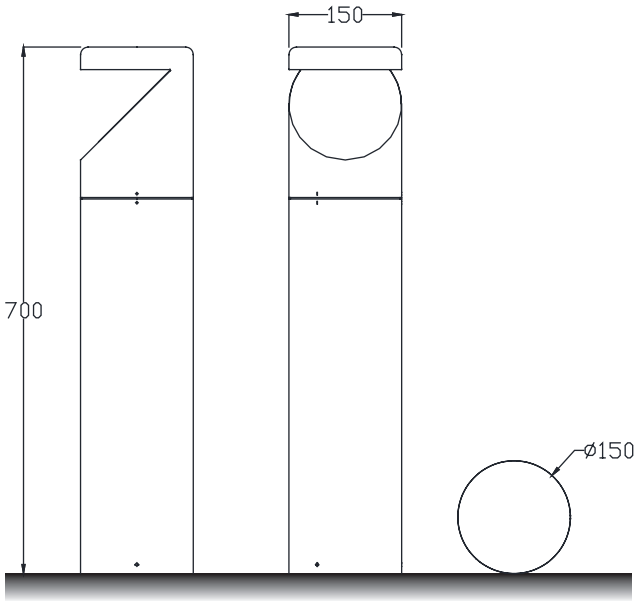

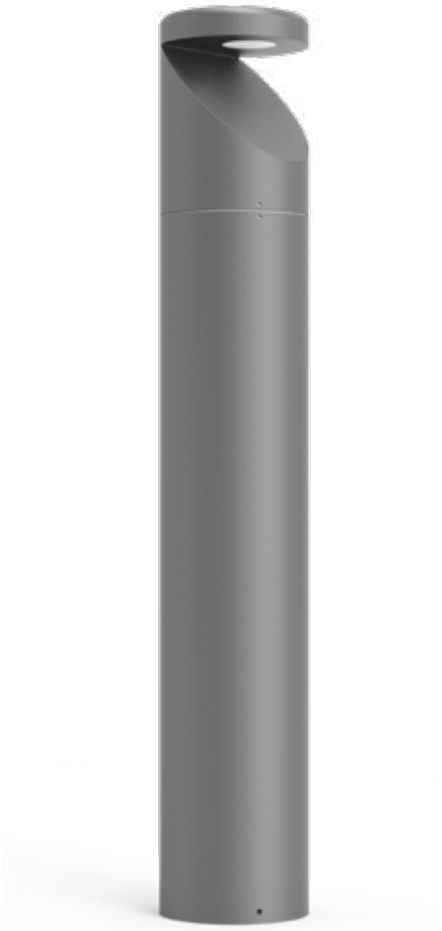

Installation plate

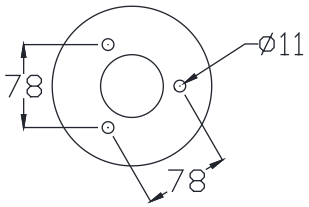

DM-CR64a

Colo(u)r temperature

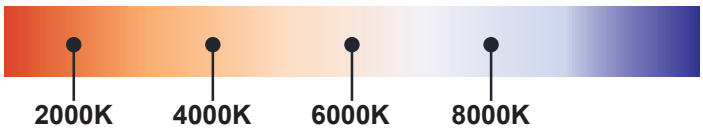

Bollard light

IP65

Rated power	12W	Power Factor	> 0.9
LED Quantity	12pcs	Life	> 50000H
Color Temperature	6000k/4000k/3000k	THD	< 15%
Luminous Flux	1100lm	Frequency Range	50/60HZ
Input Voltage	AC100~277V	Lnstallation Pipe Diameter	/
Protection Grade	IP65	CRI	> 90
Operating Temperature	-30~50℃		

DM-CR64a

Standard colours

9004 9006 9007 9016

Bollard light

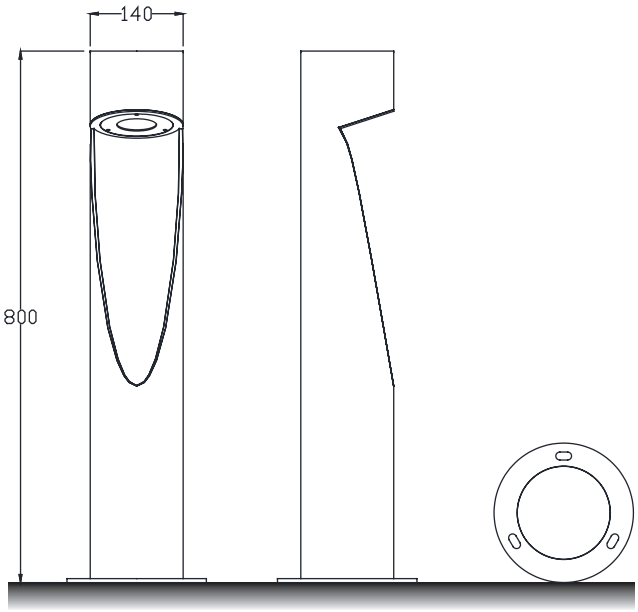

Installation plate

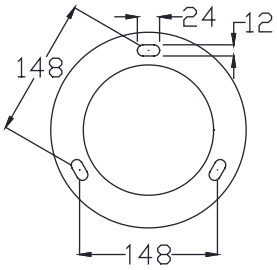

DM-CR65a

Colo(u)r temperature

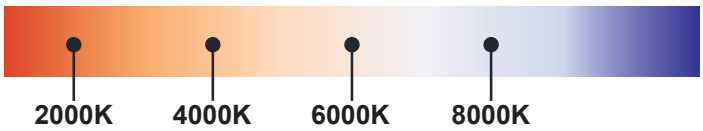

Bollard light

IP65

Rated power	12W	Power Factor	> 0.9
LED Quantity	12pcs	Life	> 50000H
Color Temperature	6000k/4000k/3000k	THD	< 15%
Luminous Flux	1100lm	Frequency Range	50/60HZ
Input Voltage	AC100~277V	Lnstallation Pipe Diameter	/
Protection Grade	IP65	CRI	> 90
Operating Temperature	-30~50℃		

DM-CR65a

Standard colours

9004 9006 9007 9016

Bollard light

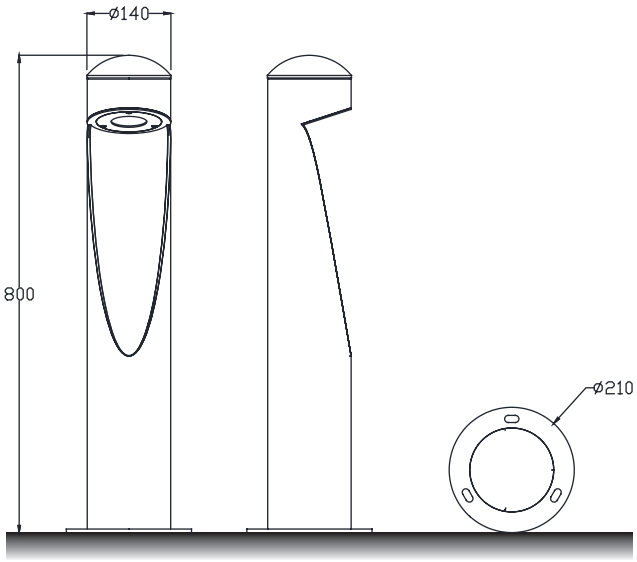

Installation plate

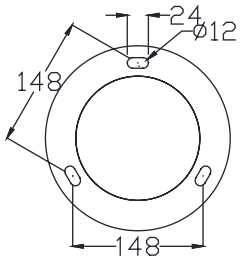

DM-CR65b

Colo(u)r temperature

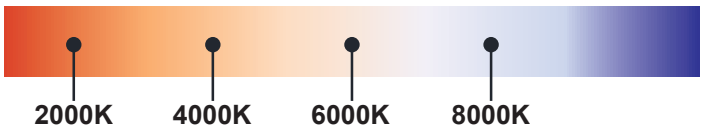

Bollard light

IP65

Rated power	12W	Power Factor	> 0.9
LED Quantity	12pcs	Life	> 50000H
Color Temperature	6000k/4000k/3000k	THD	< 15%
Luminous Flux	1100lm	Frequency Range	50/60HZ
Input Voltage	AC100~277V	Lnstallation Pipe Diameter	/
Protection Grade	IP65	CRI	> 90
Operating Temperature	-30~50℃		

DM-CR65b

Standard colours

9004 9006 9007 9016

Bollard light

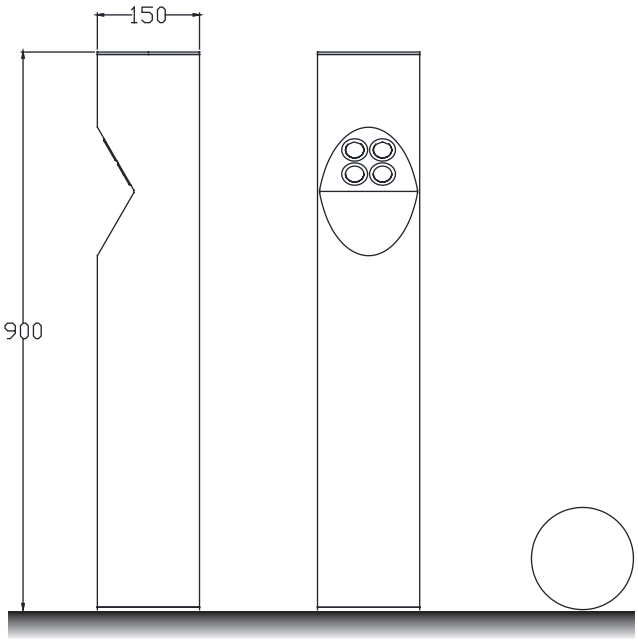

Installation plate

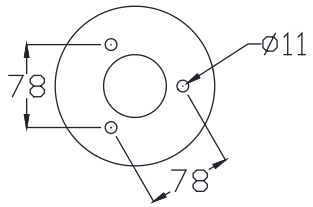

DM-CR66a

Colo(u)r temperature

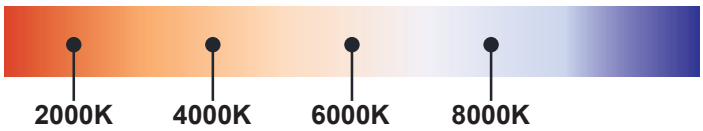

Bollard light

IP65

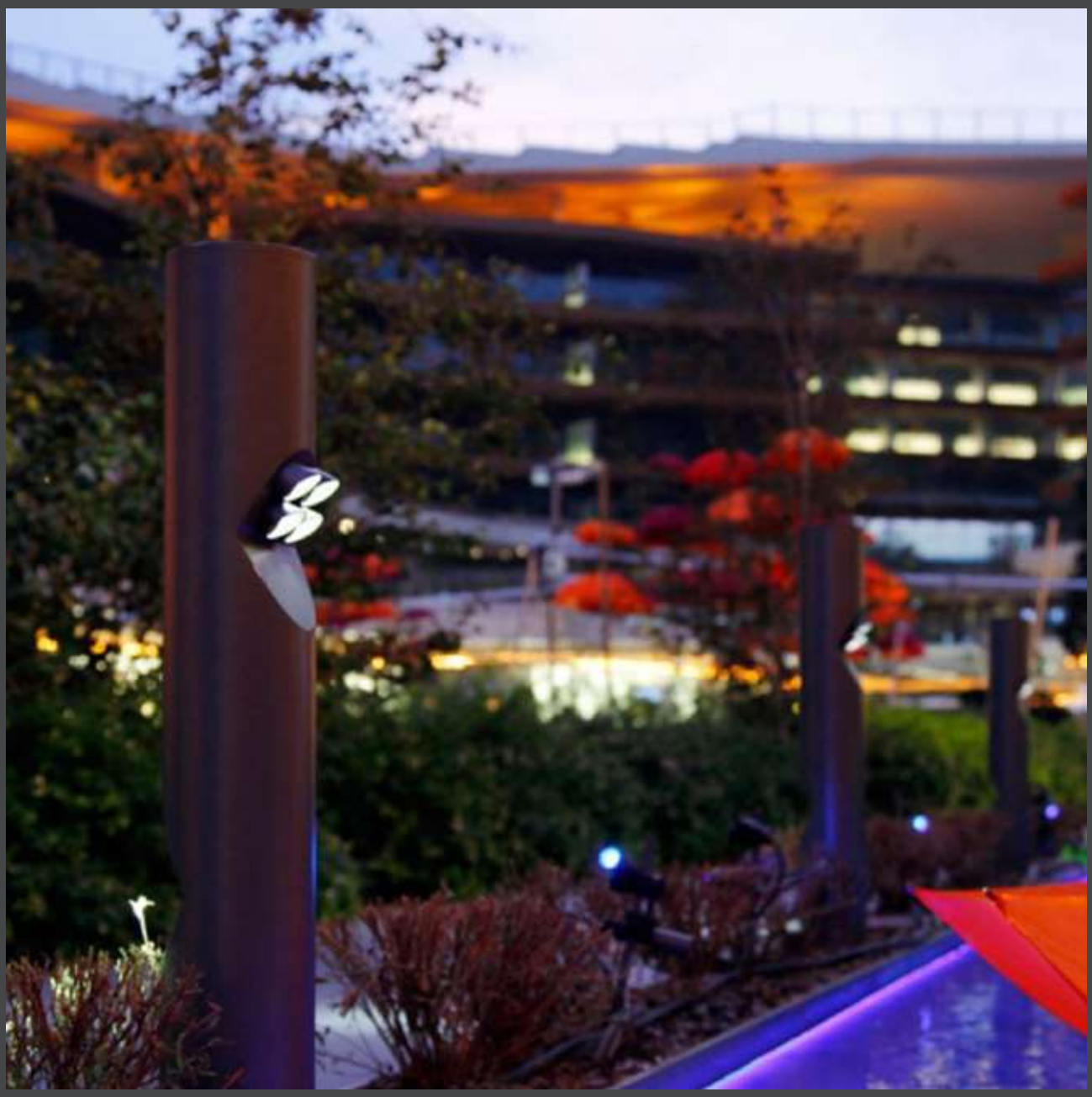

Rated power	12W	Power Factor	> 0.9
LED Quantity	12pcs	Life	> 50000H
Color Temperature	6000k/4000k/3000k	THD	< 15%
Luminous Flux	1100lm	Frequency Range	50/60HZ
Input Voltage	AC100~277V	Lnstallation Pipe Diameter	/
Protection Grade	IP65	CRI	> 90
Operating Temperature	-30~50℃		

DM-CR66a

Standard colours

9004 9006 9007 9016

Bollard light

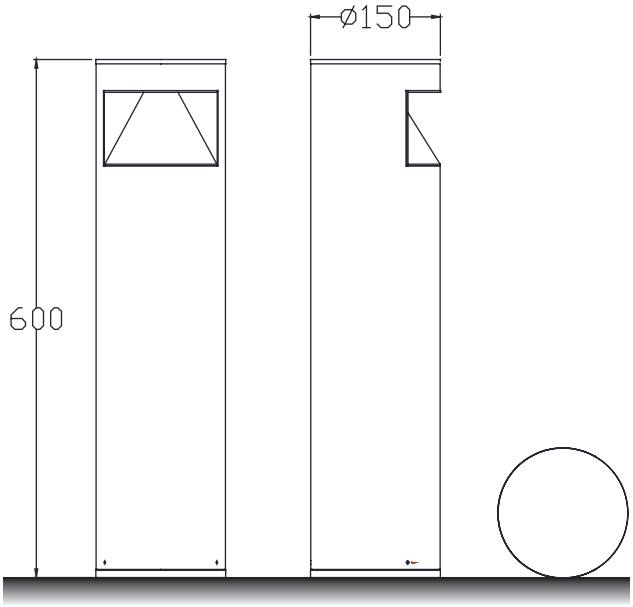

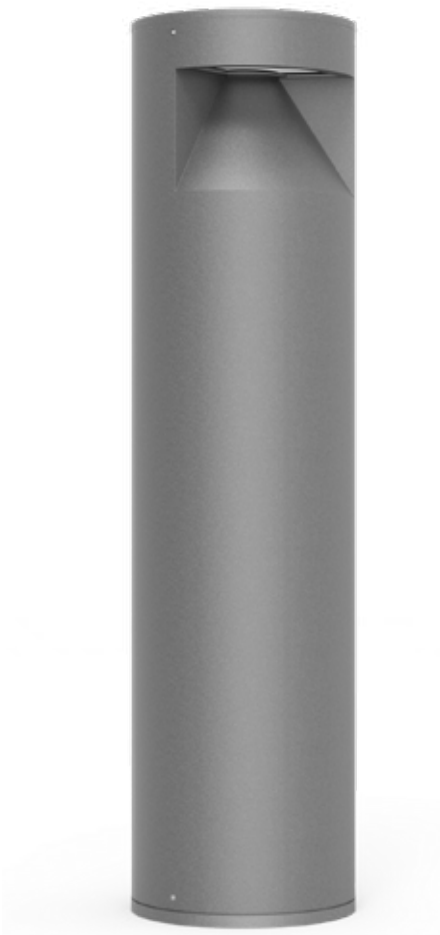

Installation plate

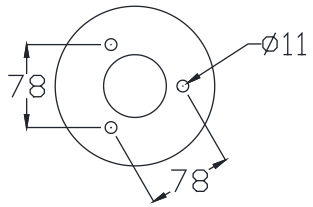

DM-CR67a

Colo(u)r temperature

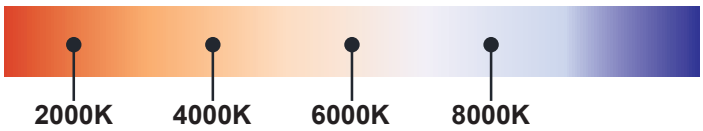

Bollard light

IP65

Rated power	12W	Power Factor	> 0.9
LED Quantity	12pcs	Life	> 50000H
Color Temperature	6000k/4000k/3000k	THD	< 15%
Luminous Flux	1100lm	Frequency Range	50/60HZ
Input Voltage	AC100~277V	Lnstallation Pipe Diameter	/
Protection Grade	IP65	CRI	> 90
Operating Temperature	-30~50℃		

DM-CR67a

Standard colours

9004 9006 9007 9016

Bollard light

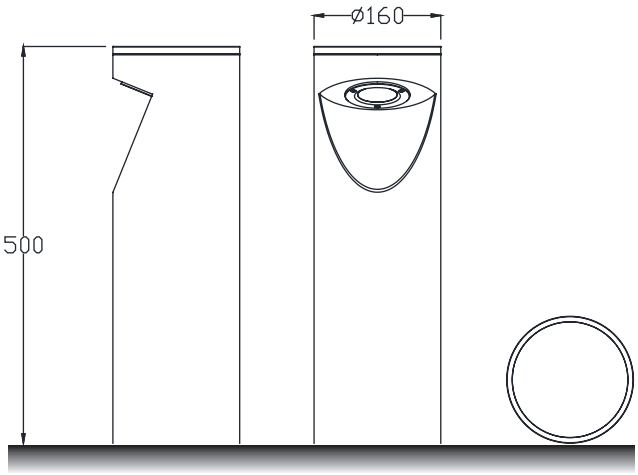

Installation plate

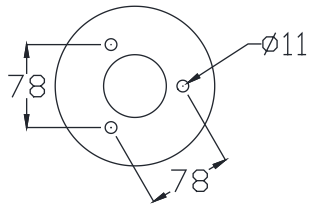

DM-CR68a

Colo(u)r temperature

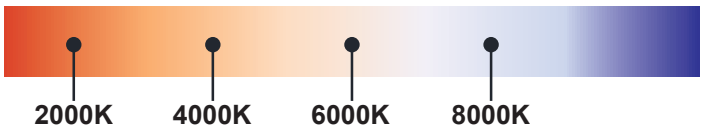

Bollard light

IP65

Rated power	12W	Power Factor	> 0.9
LED Quantity	12pcs	Life	> 50000H
Color Temperature	6000k/4000k/3000k	THD	< 15%
Luminous Flux	1100lm	Frequency Range	50/60HZ
Input Voltage	AC100~277V	Lnstallation Pipe Diameter	/
Protection Grade	IP65	CRI	> 90
Operating Temperature	-30~50℃		

DM-CR68a

Standard colours

9004 9006 9007 9016

Bollard light

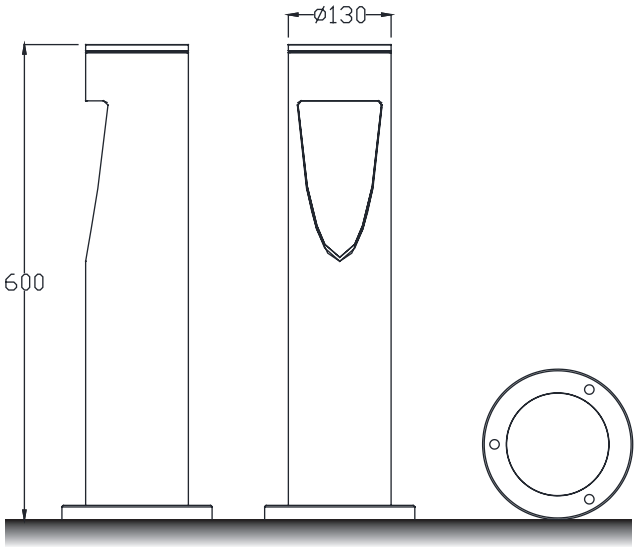

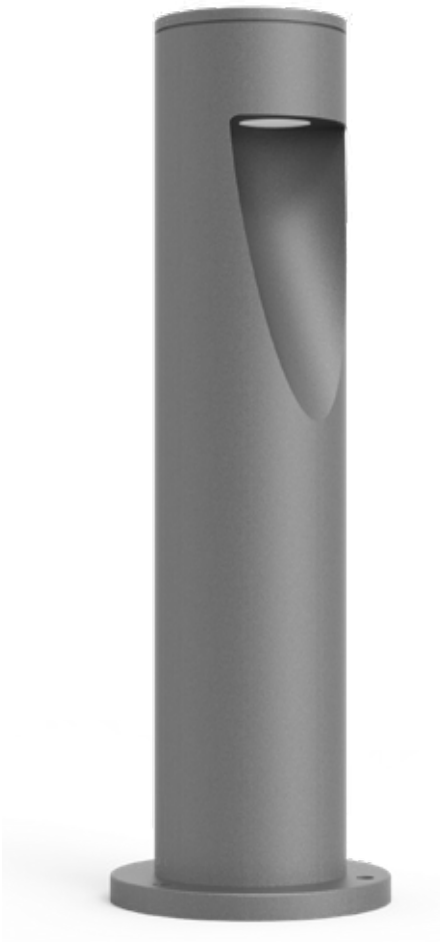

Installation plate

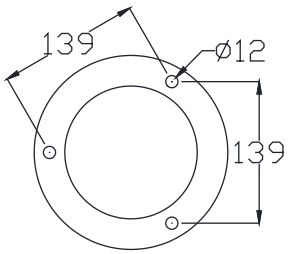

DM-CR69a

Colo(u)r temperature

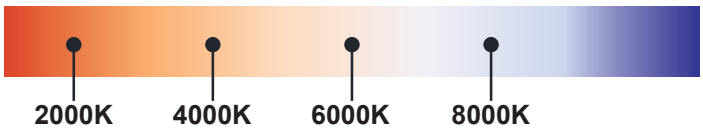

Bollard light

IP65

Rated power	12W	Power Factor	> 0.9
LED Quantity	12pcs	Life	> 50000H
Color Temperature	6000k/4000k/3000k	THD	< 15%
Luminous Flux	1100lm	Frequency Range	50/60HZ
Input Voltage	AC100~277V	Lnstallation Pipe Diameter	/
Protection Grade	IP65	CRI	> 90
Operating Temperature	-30~50℃		

DM-CR69a

Standard colours

9004 9006 9007 9016

Bollard light

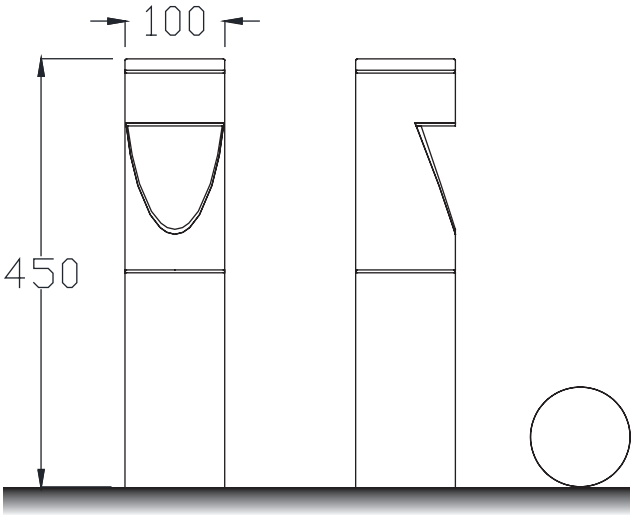

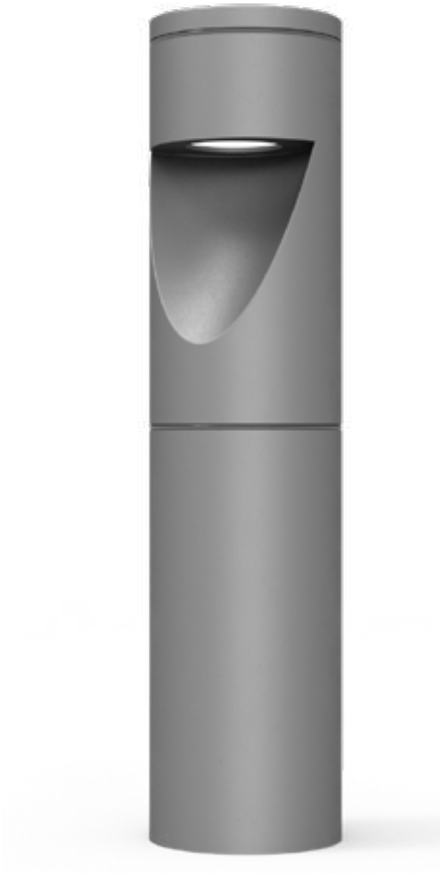

Installation plate

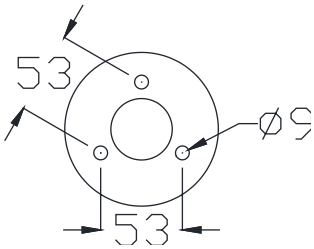

DM-CR70a

Colo(u)r temperature

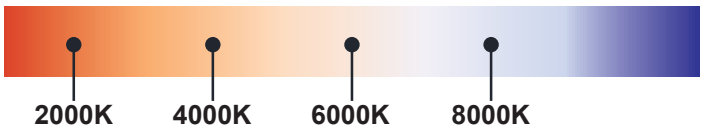

Bollard light

IP65

Rated power	12W	Power Factor	> 0.9
LED Quantity	12pcs	Life	> 50000H
Color Temperature	6000k/4000k/3000k	THD	< 15%
Luminous Flux	1100lm	Frequency Range	50/60HZ
Input Voltage	AC100~277V	Lnstallation Pipe Diameter	/
Protection Grade	IP65	CRI	> 90
Operating Temperature	-30~50℃		

DM-CR70a

Standard colours

9004 9006 9007 9016

Bollard light

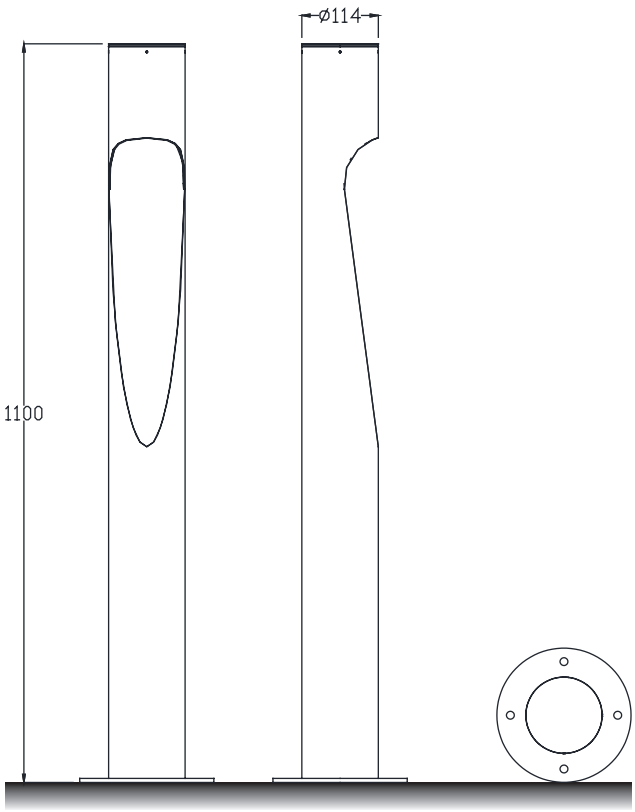

Installation plate

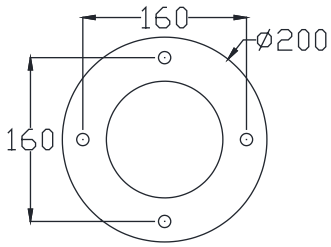

DM-CR71a

Colo(u)r temperature

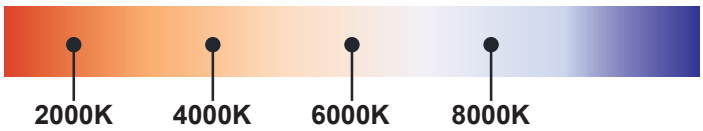

Bollard light

IP65

Rated power	12W	Power Factor	> 0.9
LED Quantity	12pcs	Life	> 50000H
Color Temperature	6000k/4000k/3000k	THD	< 15%
Luminous Flux	1100lm	Frequency Range	50/60HZ
Input Voltage	AC100~277V	Lnstallation Pipe Diameter	/
Protection Grade	IP65	CRI	> 90
Operating Temperature	-30~50℃		

DM-CR71a

Standard colours

9004 9006 9007 9016

Bollard light

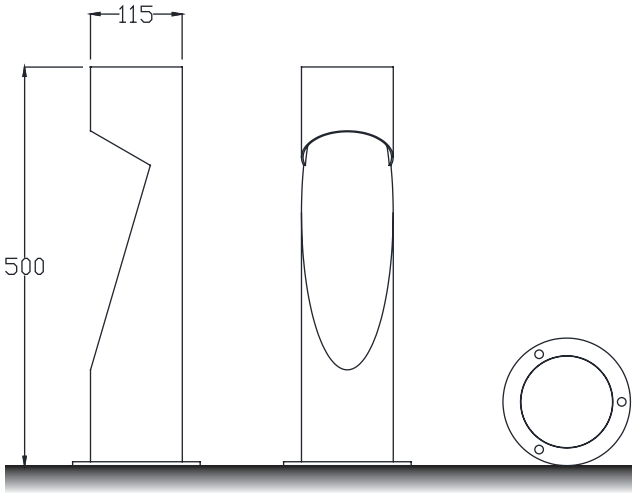

Installation plate

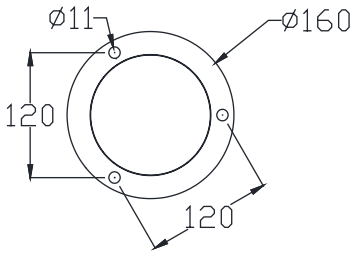

DM-CR72a

Colo(u)r temperature

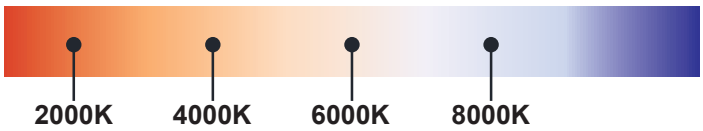

Bollard light

IP65

Rated power	12W	Power Factor	> 0.9
LED Quantity	12pcs	Life	> 50000H
Color Temperature	6000k/4000k/3000k	THD	< 15%
Luminous Flux	1100lm	Frequency Range	50/60HZ
Input Voltage	AC100~277V	Lnstallation Pipe Diameter	/
Protection Grade	IP65	CRI	> 90
Operating Temperature	-30~50℃		

DM-CR72a

Standard colours

9004 9006 9007 9016

Bollard light

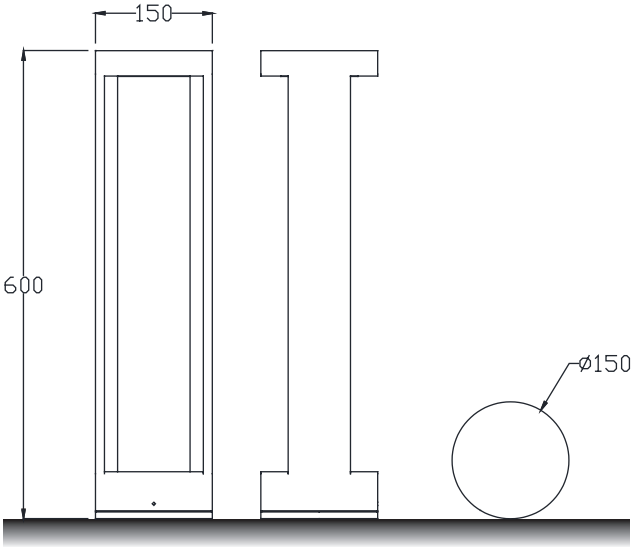

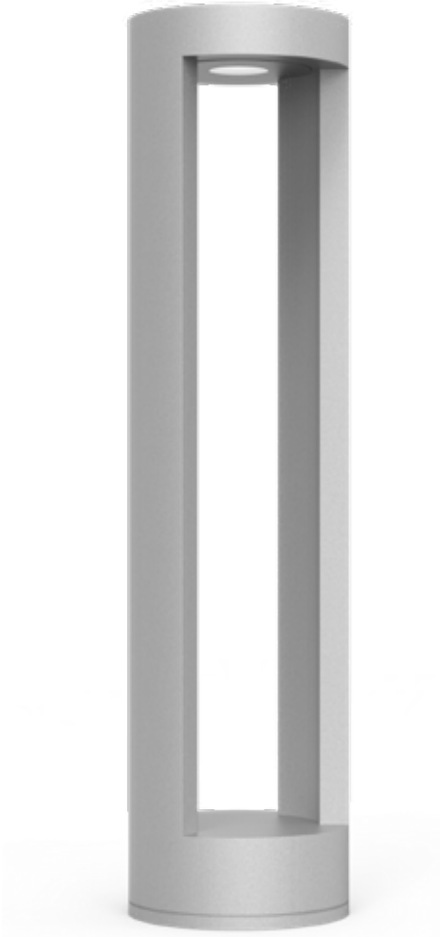

Installation plate

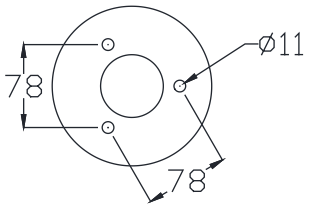

DM-CR73a

Colo(u)r temperature

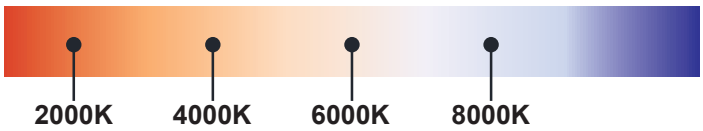

Bollard light

IP65

Rated power	12W	Power Factor	> 0.9
LED Quantity	12pcs	Life	> 50000H
Color Temperature	6000k/4000k/3000k	THD	< 15%
Luminous Flux	1100lm	Frequency Range	50/60HZ
Input Voltage	AC100~277V	Lnstallation Pipe Diameter	/
Protection Grade	IP65	CRI	> 90
Operating Temperature	-30~50℃		

DM-CR73a

Standard colours

9004 9006 9007 9016

Bollard light

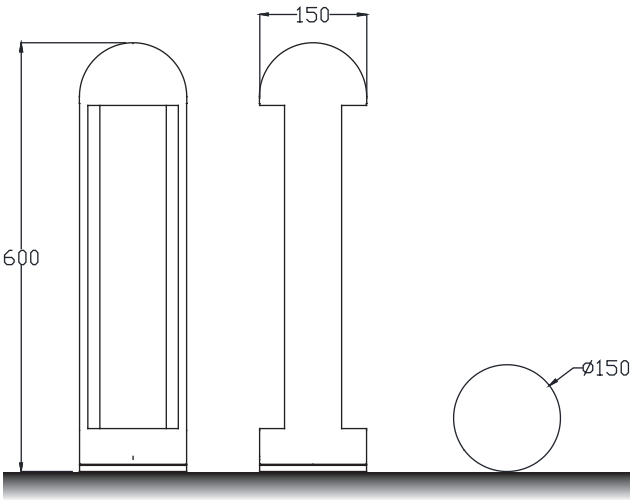

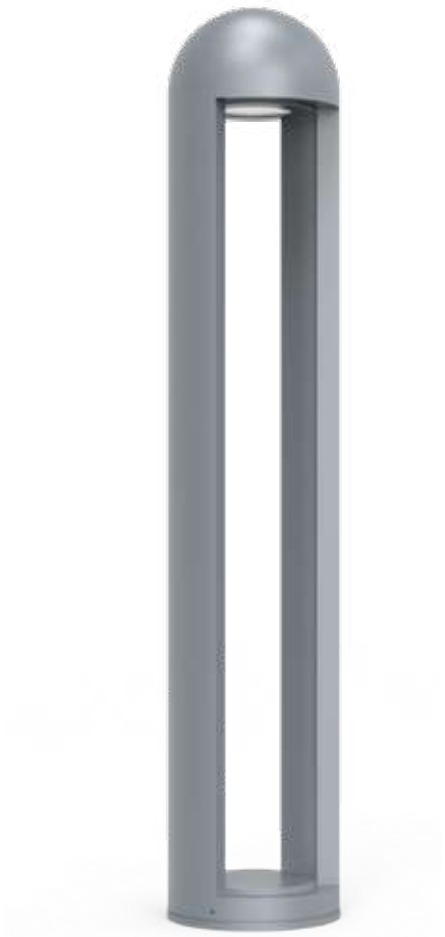

Installation plate

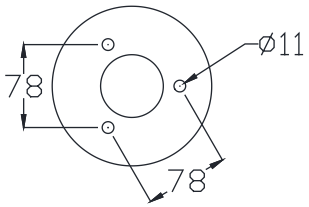

DM-CR74a

Colo(u)r temperature

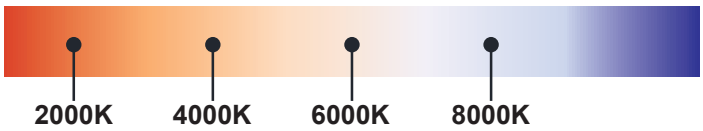

Bollard light

IP65

Rated power	12W	Power Factor	> 0.9
LED Quantity	1pcs	Life	> 50000H
Color Temperature	6000k/4000k/3000k	THD	< 15%
Luminous Flux	1100lm	Frequency Range	50/60HZ
Input Voltage	AC100~277V	Lnstallation Pipe Diameter	/
Protection Grade	IP65	CRI	> 70
Operating Temperature	-30~50℃		

DM-CR74a

Standard colours

9004 9006 9007 9016

Bollard light

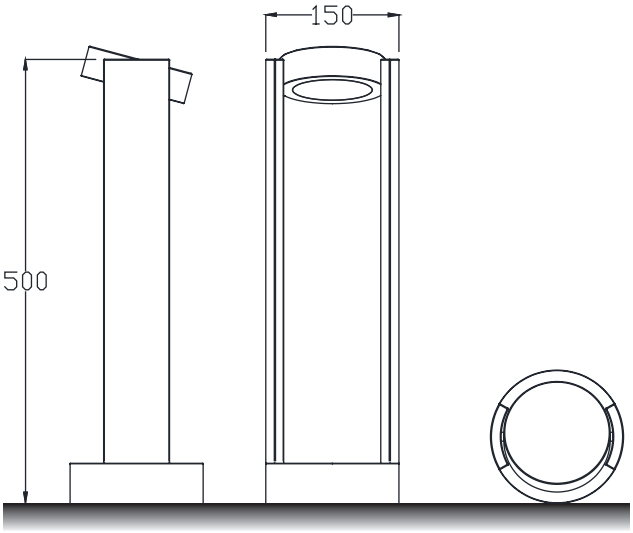

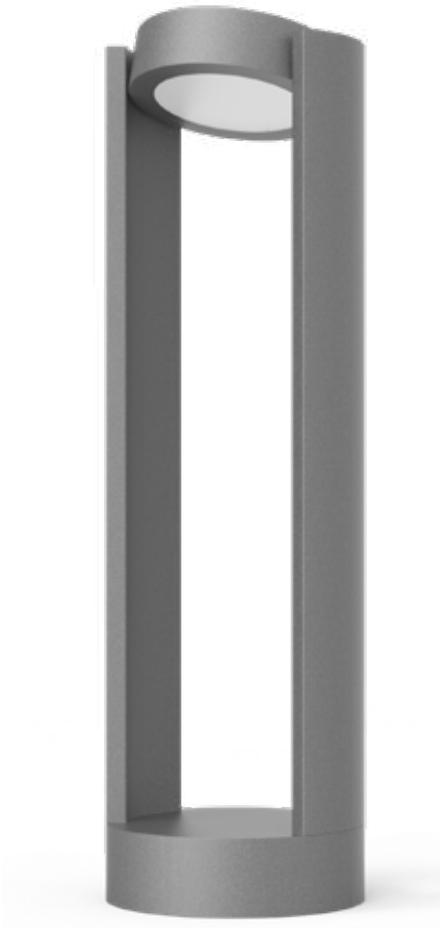

Installation plate

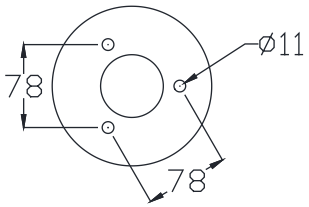

DM-CR75a

Colo(u)r temperature

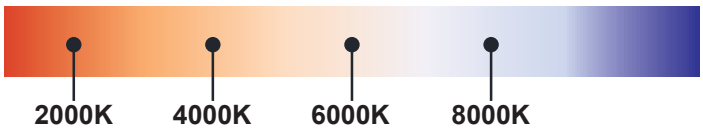

Bollard light

IP65

Rated power	12W	Power Factor	> 0.9
LED Quantity	12pcs	Life	> 50000H
Color Temperature	6000k/4000k/3000k	THD	< 15%
Luminous Flux	1100lm	Frequency Range	50/60HZ
Input Voltage	AC100~277V	Lnstallation Pipe Diameter	/
Protection Grade	IP65	CRI	> 90
Operating Temperature	-30~50℃		

DM-CR75a

Standard colours

9004 9006 9007 9016

Bollard light

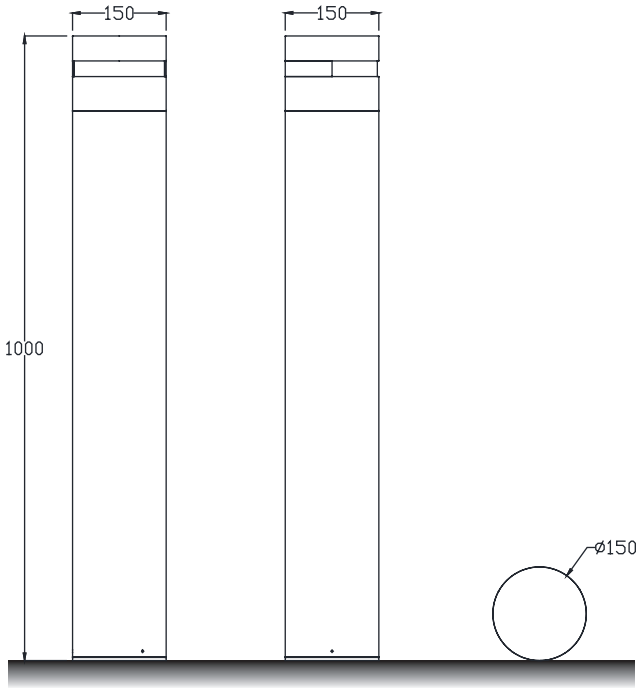

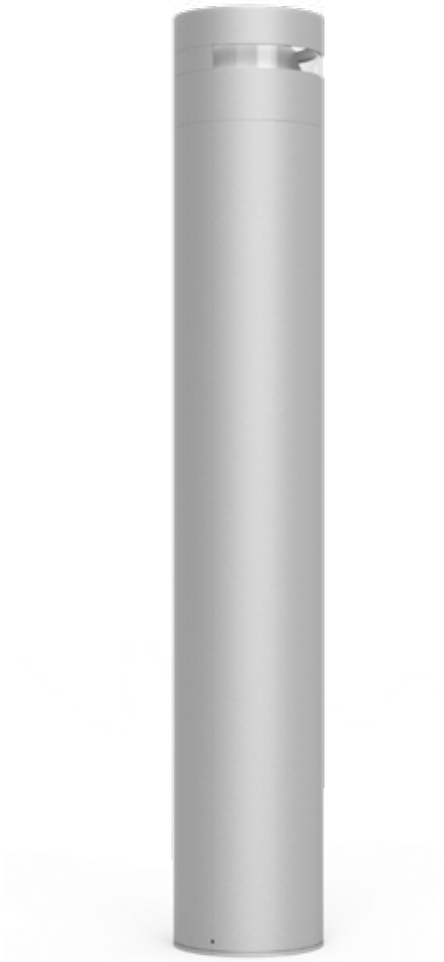

Installation plate

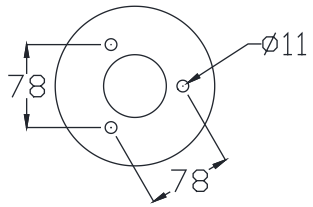

DM-CR76a

Colo(u)r temperature

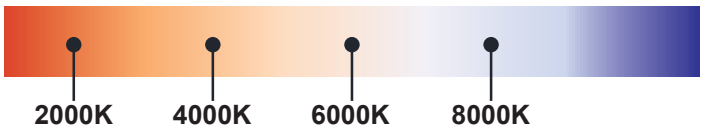

Bollard light

IP65

Rated power	12W	Power Factor	> 0.9
LED Quantity	12pcs	Life	> 50000H
Color Temperature	6000k/4000k/3000k	THD	< 15%
Luminous Flux	1100lm	Frequency Range	50/60HZ
Input Voltage	AC100~277V	Lnstallation Pipe Diameter	/
Protection Grade	IP65	CRI	> 90
Operating Temperature	-30~50℃		

DM-CR76a

Standard colours

9004 9006 9007 9016

Bollard light

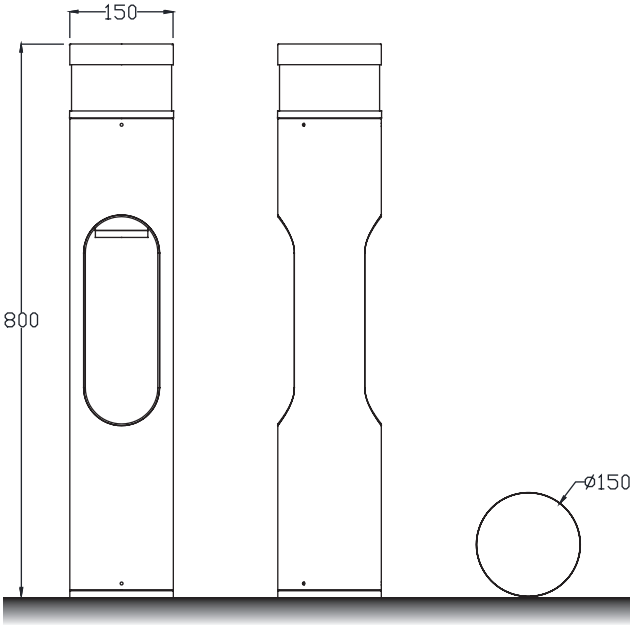

Installation plate

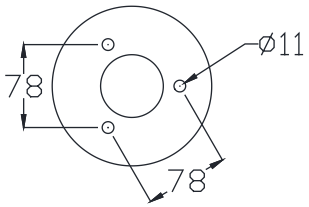

DM-CR77a

Colo(u)r temperature

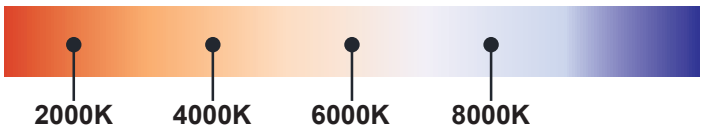

Bollard light

IP65

Rated power	12W	Power Factor	> 0.9
LED Quantity	12pcs	Life	> 50000H
Color Temperature	6000k/4000k/3000k	THD	< 15%
Luminous Flux	1100lm	Frequency Range	50/60HZ
Input Voltage	AC100~277V	Lnstallation Pipe Diameter	/
Protection Grade	IP65	CRI	> 90
Operating Temperature	-30~50℃		

DM-CR77a

Standard colours

9004 9006 9007 9016

Bollard light

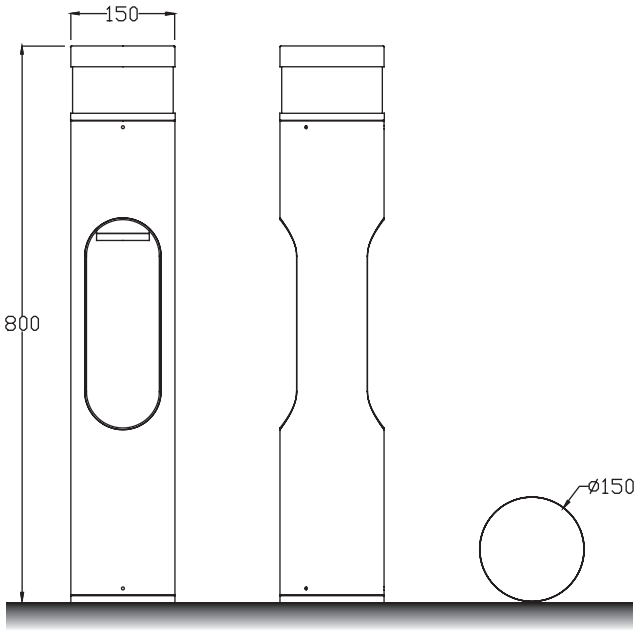

Installation plate

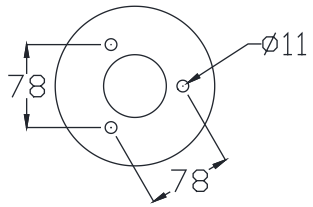

DM-CR78a

Colo(u)r temperature

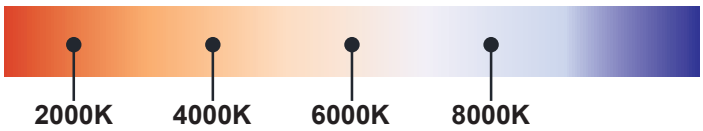

Bollard light

IP65

Rated power	12W	Power Factor	> 0.9
LED Quantity	12pcs	Life	> 50000H
Color Temperature	6000k/4000k/3000k	THD	< 15%
Luminous Flux	1100lm	Frequency Range	50/60HZ
Input Voltage	AC100~277V	Lnstallation Pipe Diameter	/
Protection Grade	IP65	CRI	> 90
Operating Temperature	-30~50℃		

DM-CR78a

Standard colours

9004 9006 9007 9016

Bollard light

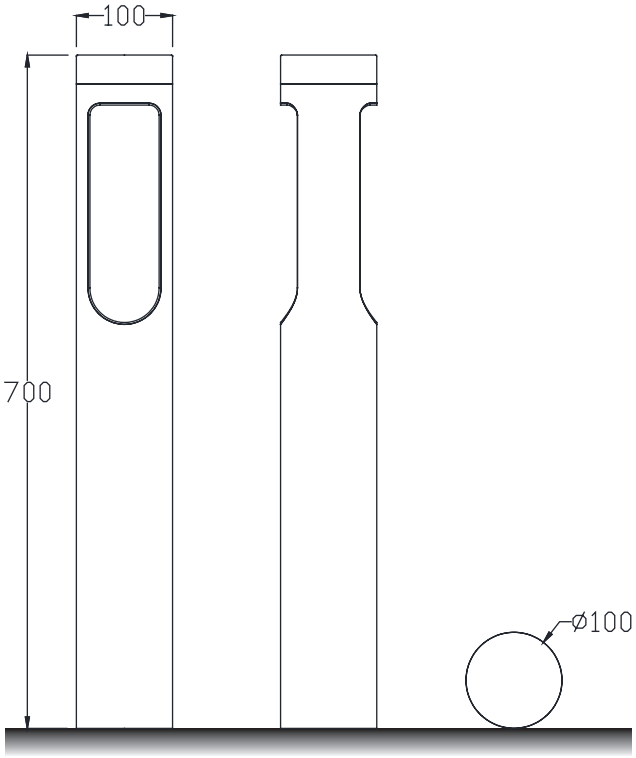

Installation plate

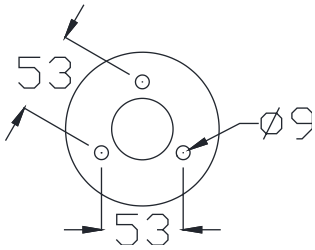

DM-CR79a

Colo(u)r temperature

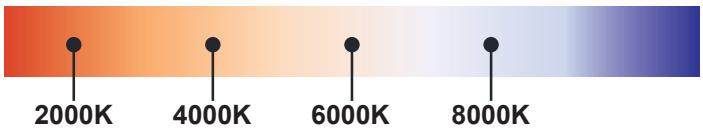

Bollard light

IP65

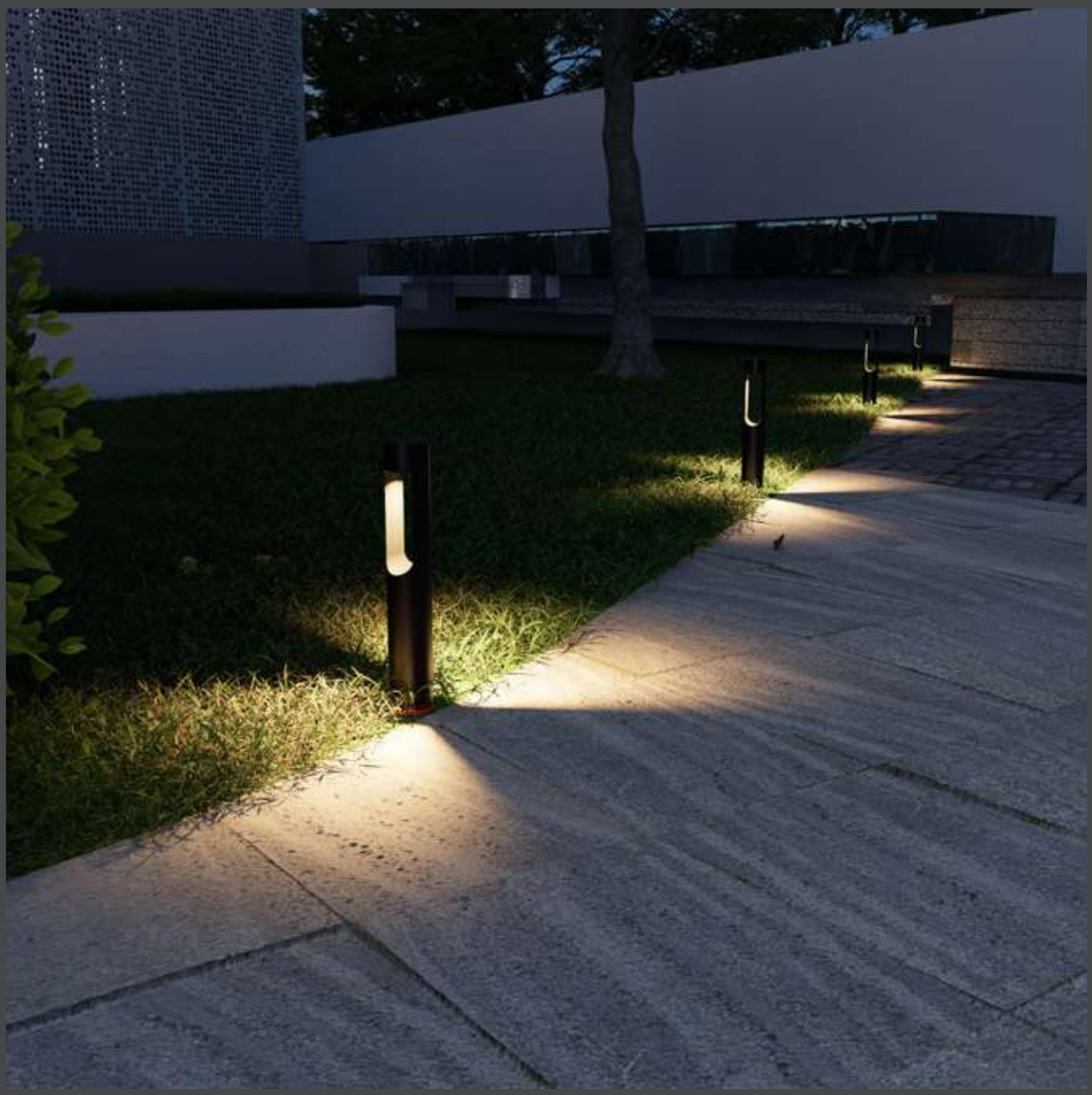

Rated power	12W	Power Factor	> 0.9
LED Quantity	12pcs	Life	> 50000H
Color Temperature	6000k/4000k/3000k	THD	< 15%
Luminous Flux	1100lm	Frequency Range	50/60HZ
Input Voltage	AC100~277V	Lnstallation Pipe Diameter	/
Protection Grade	IP65	CRI	> 90
Operating Temperature	-30~50℃		

DM-CR79a

Standard colours

9004 9006 9007 9016

Bollard light

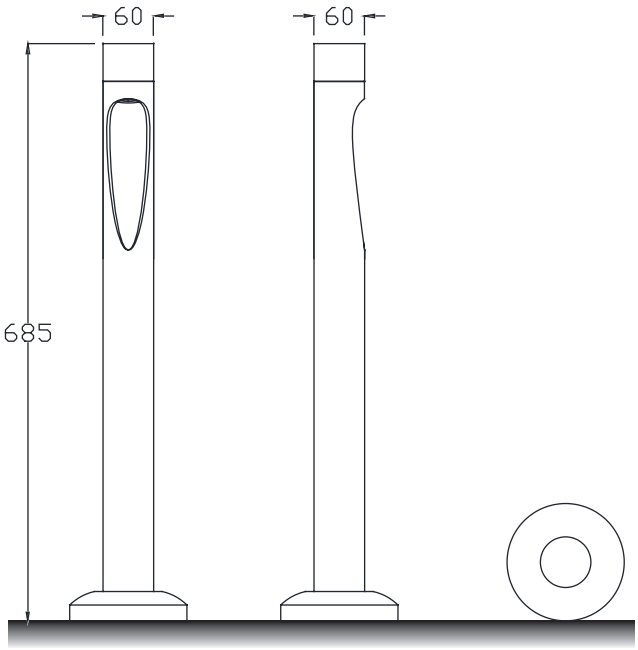

Installation plate

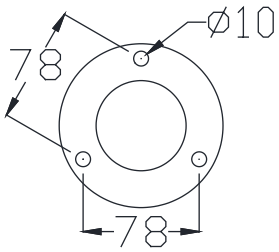

DM-CR80a

Colo(u)r temperature

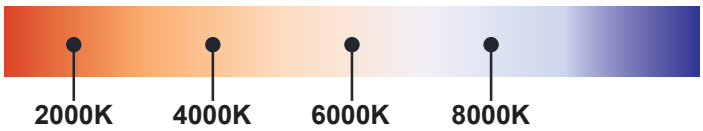

Bollard light

IP65

Rated power	12W	Power Factor	> 0.9
LED Quantity	12pcs	Life	> 50000H
Color Temperature	6000k/4000k/3000k	THD	< 15%
Luminous Flux	1100lm	Frequency Range	50/60HZ
Input Voltage	AC100~277V	Lnstallation Pipe Diameter	/
Protection Grade	IP65	CRI	> 90
Operating Temperature	-30~50℃		

DM-CR80a

Standard colours

9004 9006 9007 9016

Bollard light

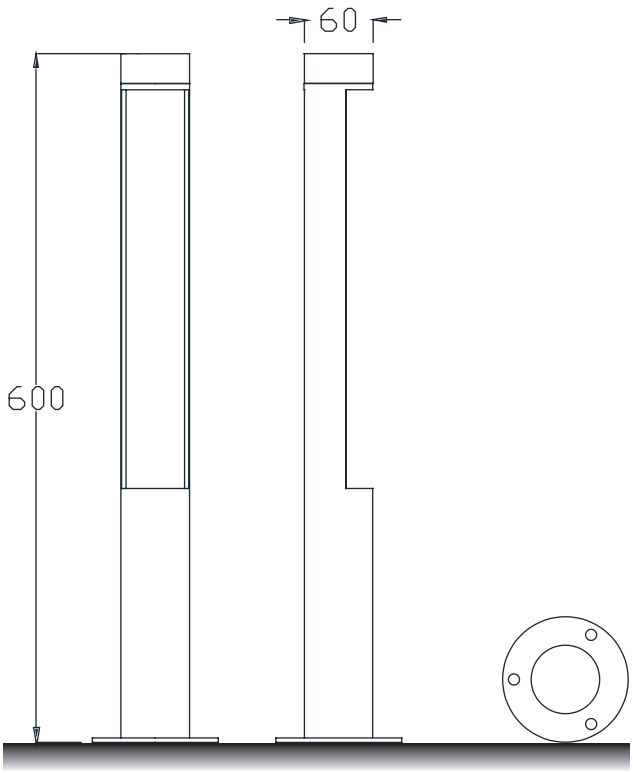

Installation plate

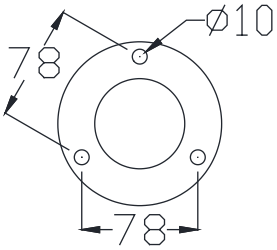

DM-CR81a

Colo(u)r temperature

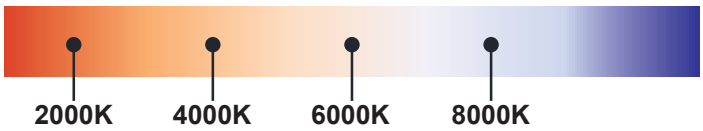

Bollard light

IP65

Rated power	12W	Power Factor	> 0.9
LED Quantity	12pcs	Life	> 50000H
Color Temperature	6000k/4000k/3000k	THD	< 15%
Luminous Flux	1100lm	Frequency Range	50/60HZ
Input Voltage	AC100~277V	Lnstallation Pipe Diameter	/
Protection Grade	IP65	CRI	> 90
Operating Temperature	-30~50℃		

DM-CR81a

Standard colours

9004 9006 9007 9016

Bollard light

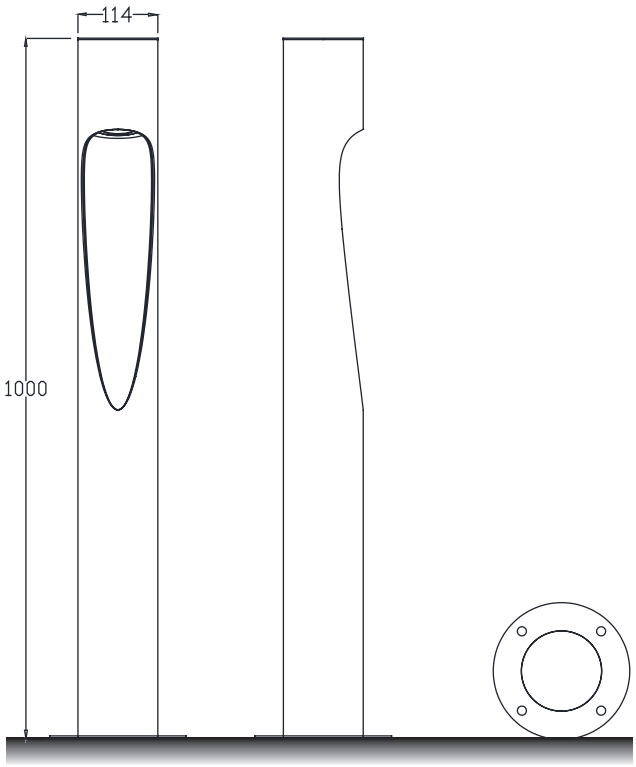

Installation plate

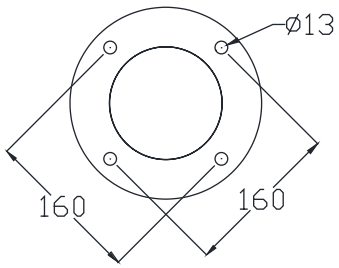

DM-CR82a

Colo(u)r temperature

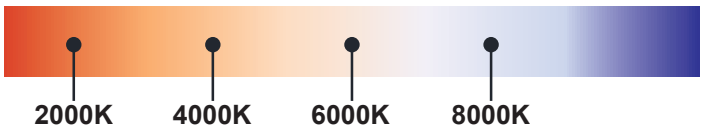

Bollard light

IP65

Rated power	12W	Power Factor	> 0.9
LED Quantity	12pcs	Life	> 50000H
Color Temperature	6000k/4000k/3000k	THD	< 15%
Luminous Flux	1100lm	Frequency Range	50/60HZ
Input Voltage	AC100~277V	Lnstallation Pipe Diameter	/
Protection Grade	IP65	CRI	> 90
Operating Temperature	-30~50℃		

DM-CR82a

Standard colours

9004 9006 9007 9016

Bollard light

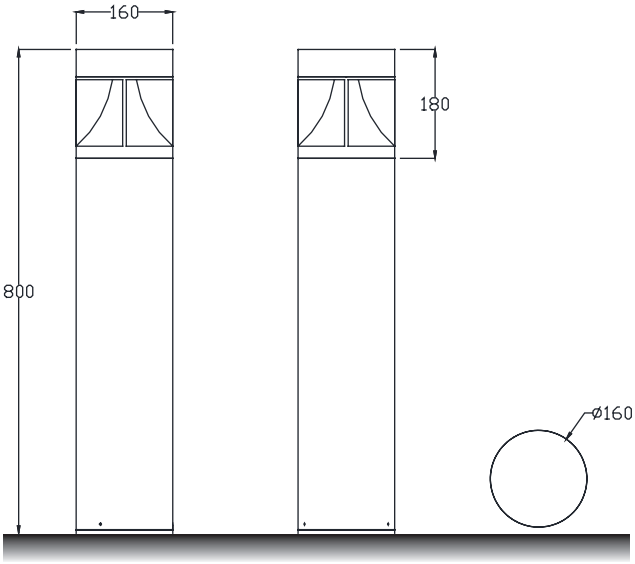

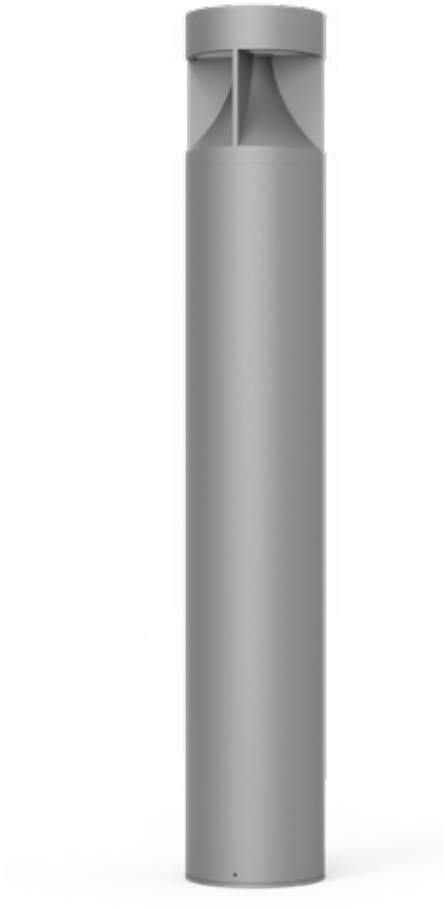

Installation plate

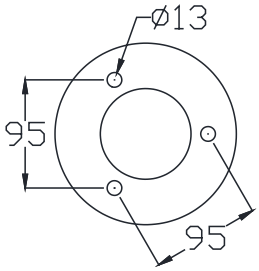

DM-CR83a

Colo(u)r temperature

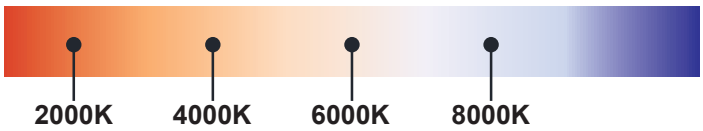

Bollard light

IP65

Rated power	12W	Power Factor	> 0.9
LED Quantity	12pcs	Life	> 50000H
Color Temperature	6000k/4000k/3000k	THD	< 15%
Luminous Flux	1100lm	Frequency Range	50/60HZ
Input Voltage	AC100~277V	Lnstallation Pipe Diameter	/
Protection Grade	IP65	CRI	> 90
Operating Temperature	-30~50℃		

DM-CR83a

Standard colours

9004 9006 9007 9016

Bollard light

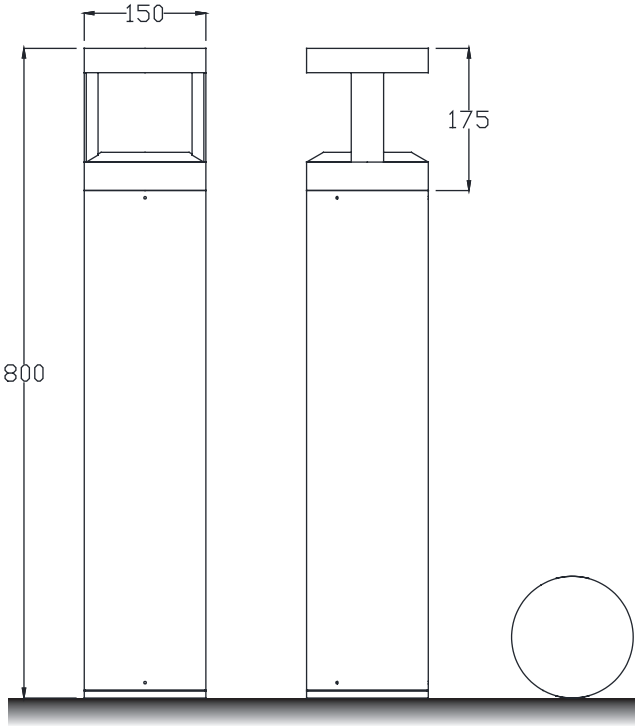

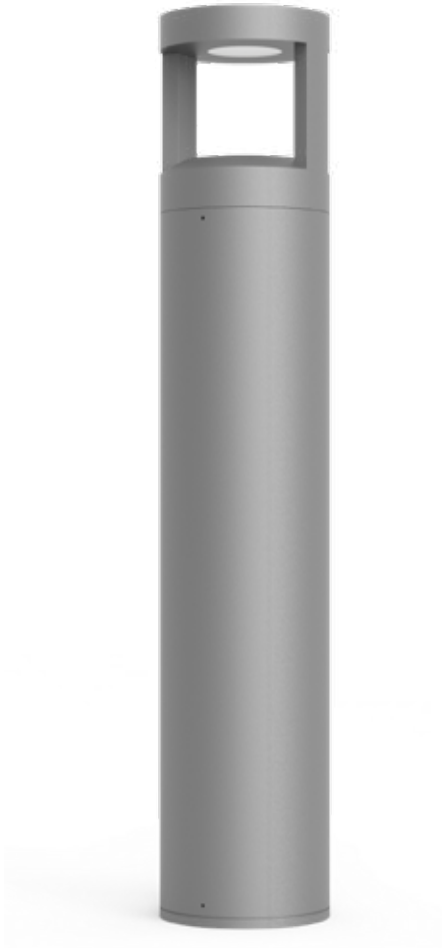

Installation plate

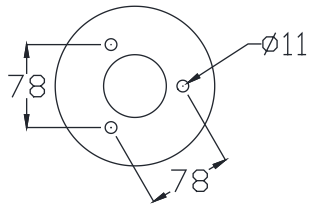

DM-CR84a

Colo(u)r temperature

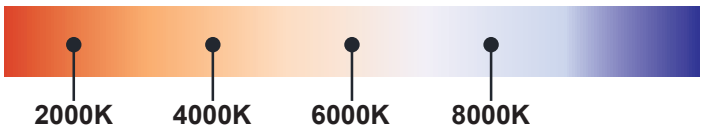

Bollard light

IP65

Rated power	12W	Power Factor	> 0.9
LED Quantity	12pcs	Life	> 50000H
Color Temperature	6000k/4000k/3000k	THD	< 15%
Luminous Flux	1100lm	Frequency Range	50/60HZ
Input Voltage	AC100~277V	Lnstallation Pipe Diameter	/
Protection Grade	IP65	CRI	> 90
Operating Temperature	-30~50℃		

DM-CR84a

Standard colours

9004 9006 9007 9016

Bollard light

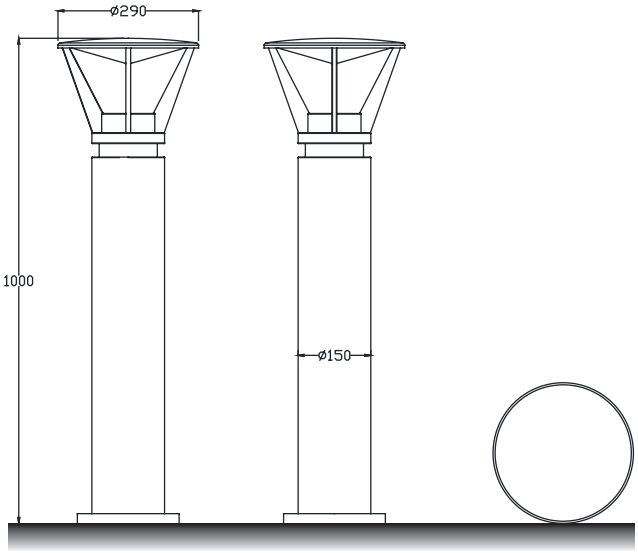

Installation plate

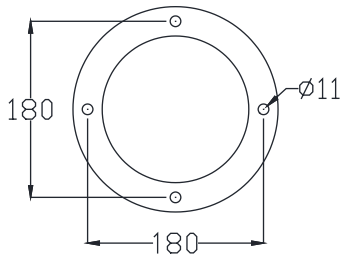

DM-CR85a

Colo(u)r temperature

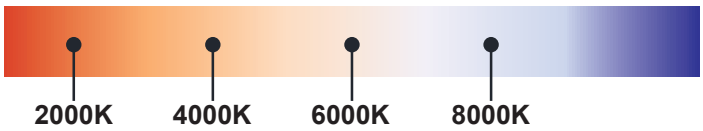

Bollard light

IP65

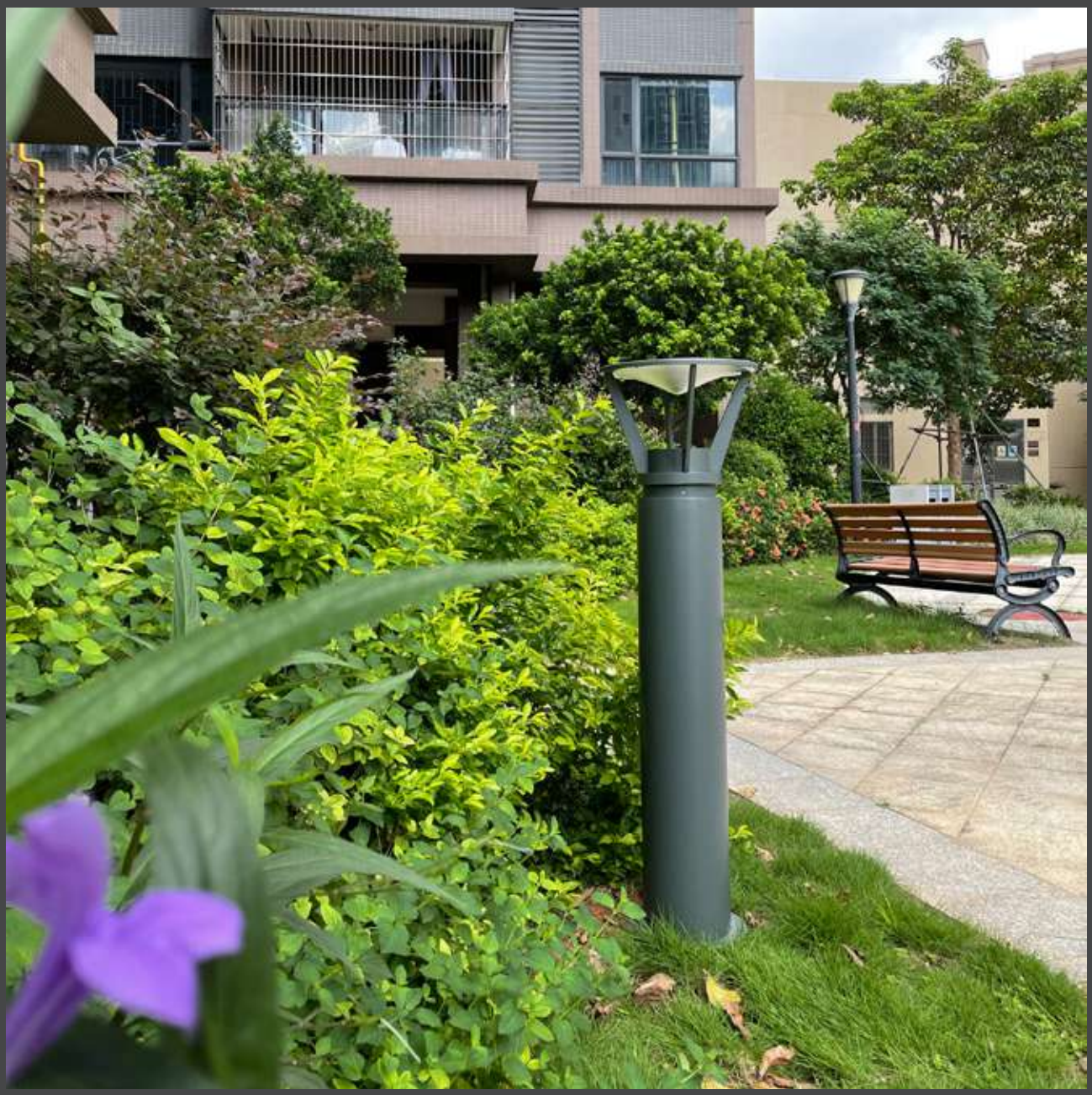

Rated power	12W	Power Factor	> 0.9
LED Quantity	12pcs	Life	> 50000H
Color Temperature	6000k/4000k/3000k	THD	< 15%
Luminous Flux	1100lm	Frequency Range	50/60HZ
Input Voltage	AC100~277V	Lnstallation Pipe Diameter	/
Protection Grade	IP65	CRI	> 90
Operating Temperature	-30~50℃		

DM-CR85a

Standard colours

9004 9006 9007 9016

Bollard light

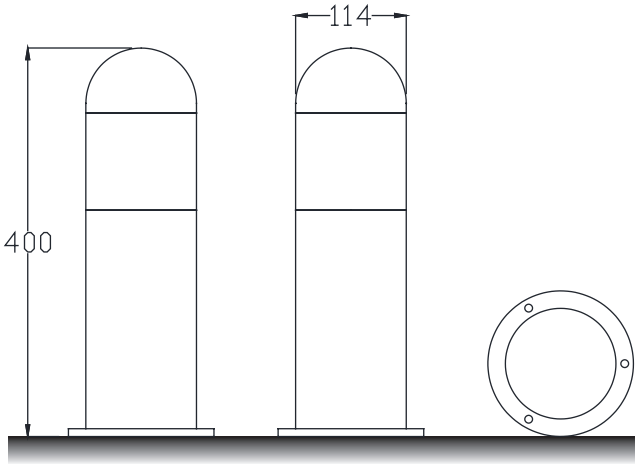

Installation plate

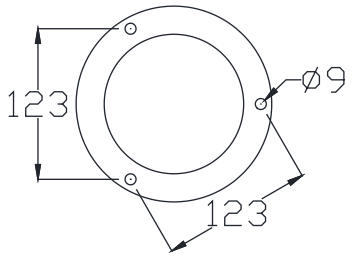

DM-CR86a

Colo(u)r temperature

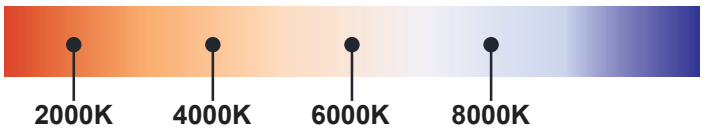

Bollard light

IP65

Rated power	12W	Power Factor	> 0.9
LED Quantity	12pcs	Life	> 50000H
Color Temperature	6000k/4000k/3000k	THD	< 15%
Luminous Flux	1100lm	Frequency Range	50/60HZ
Input Voltage	AC100~277V	Lnstallation Pipe Diameter	/
Protection Grade	IP65	CRI	> 90
Operating Temperature	-30~50℃		

DM-CR87a

Standard colours

9004 9006 9007 9016

Bollard light

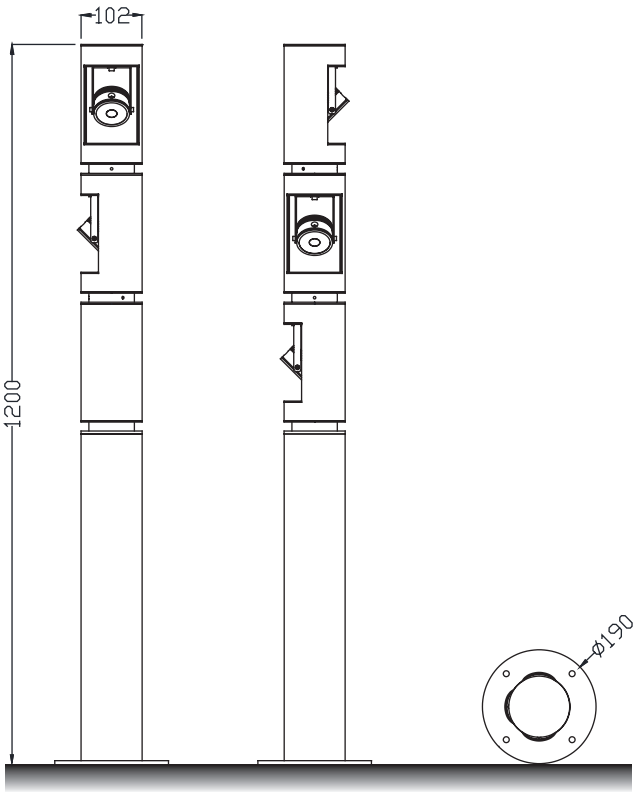

Installation plate

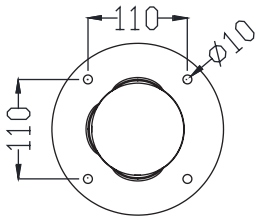

DM-CR87a

Colo(u)r temperature

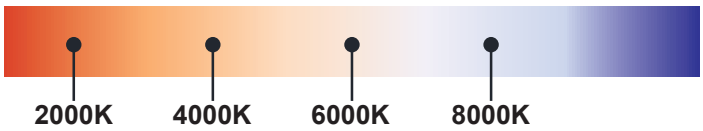

Bollard light

IP65

Rated power	12W	Power Factor	> 0.9
LED Quantity	12pcs	Life	> 50000H
Color Temperature	6000k/4000k/3000k	THD	< 15%
Luminous Flux	1100lm	Frequency Range	50/60HZ
Input Voltage	AC100~277V	Lnstallation Pipe Diameter	/
Protection Grade	IP65	CRI	> 90
Operating Temperature	-30~50℃		

DM-CR87a

Standard colours

9004 9006 9007 9016

Bollard light

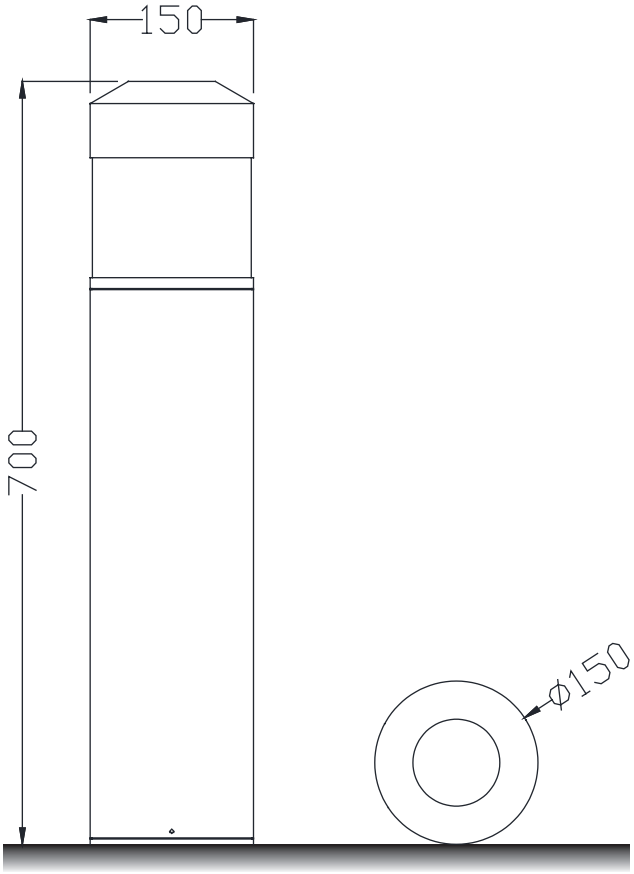

Installation plate

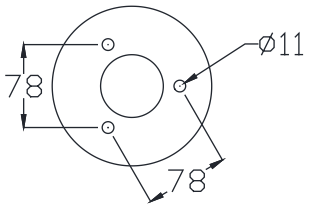

DM-CR88a

Colo(u)r temperature

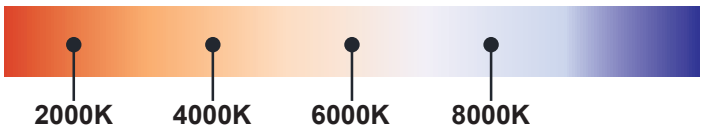

Bollard light

IP65

Rated power	12W	Power Factor	> 0.9
LED Quantity	12pcs	Life	> 50000H
Color Temperature	6000k/4000k/3000k	THD	< 15%
Luminous Flux	1100lm	Frequency Range	50/60HZ
Input Voltage	AC100~277V	Lnstallation Pipe Diameter	/
Protection Grade	IP65	CRI	> 90
Operating Temperature	-30~50℃		

DM-CR88a

Standard colours

9004 9006 9007 9016

Bollard light

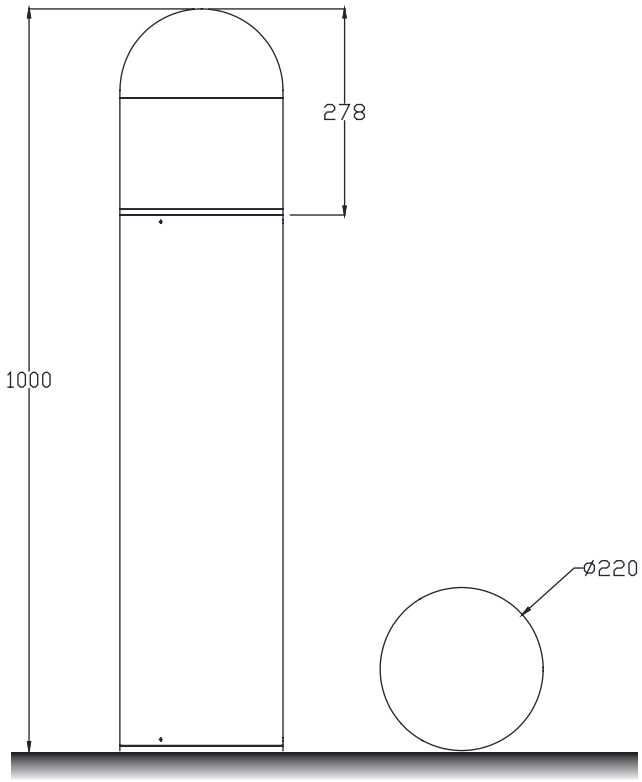

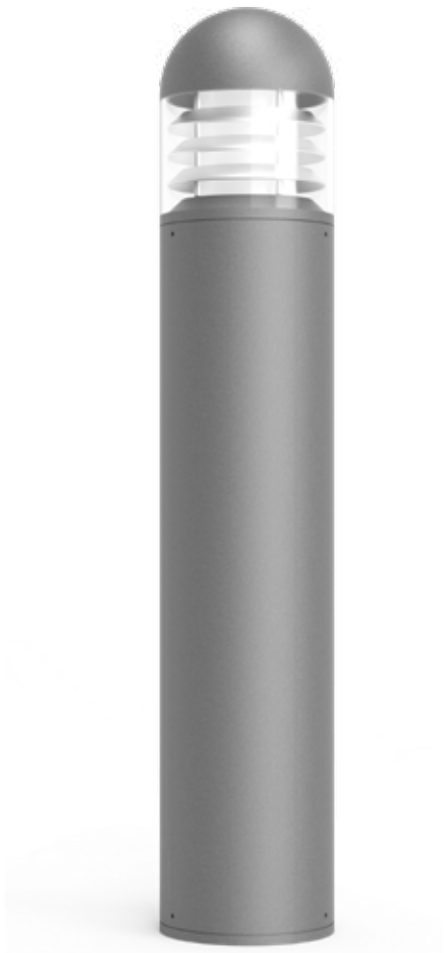

Installation plate

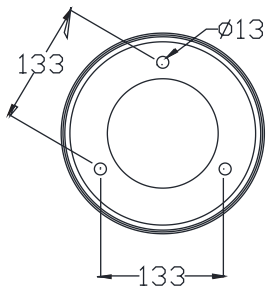

DM-CR89a

Colo(u)r temperature

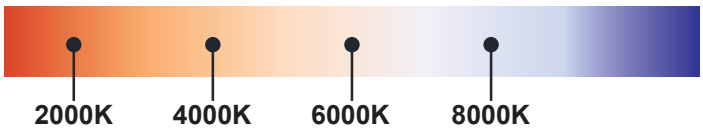

Bollard light

IP65

Rated power	12W	Power Factor	> 0.9
LED Quantity	12pcs	Life	> 50000H
Color Temperature	6000k/4000k/3000k	THD	< 15%
Luminous Flux	1100lm	Frequency Range	50/60HZ
Input Voltage	AC100~277V	Lnstallation Pipe Diameter	/
Protection Grade	IP65	CRI	> 90
Operating Temperature	-30~50℃		

DM-CR89a

Standard colours

9004 9006 9007 9016

Bollard light

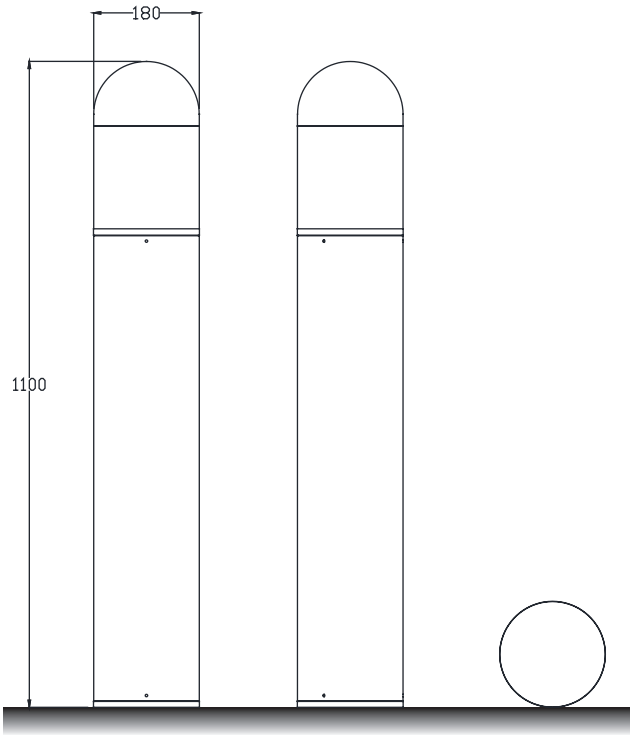

Installation plate

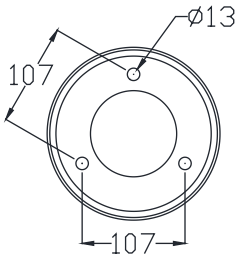

DM-CR90a

Colo(u)r temperature

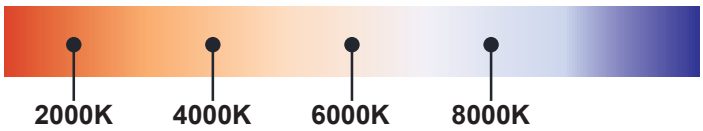

Bollard light

IP65

Rated power	12W	Power Factor	> 0.9
LED Quantity	12pcs	Life	> 50000H
Color Temperature	6000k/4000k/3000k	THD	< 15%
Luminous Flux	1100lm	Frequency Range	50/60HZ
Input Voltage	AC100~277V	Lnstallation Pipe Diameter	/
Protection Grade	IP65	CRI	> 90
Operating Temperature	-30~50℃		

DM-CR90a

Standard colours

9004 9006 9007 9016

Bollard light

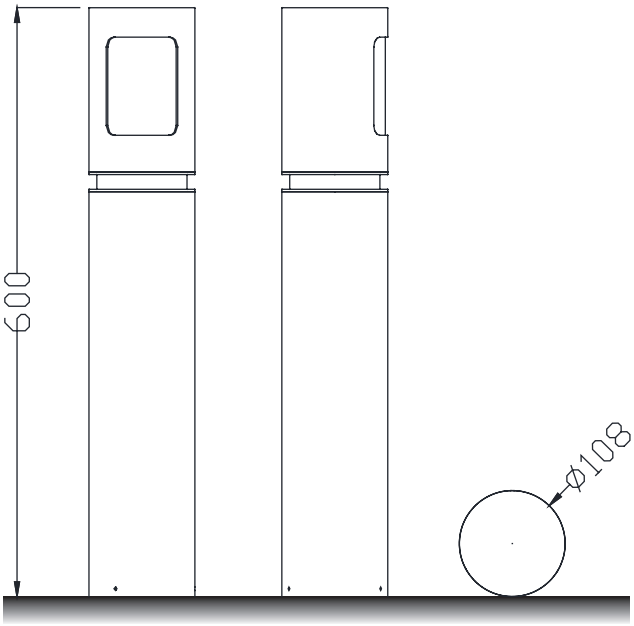

Installation plate

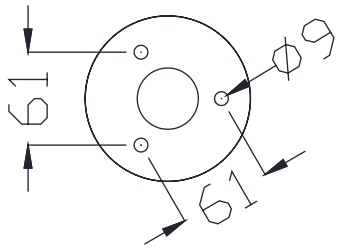

DM-CR91a

Colo(u)r temperature

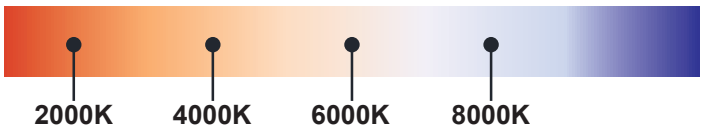

Bollard light

IP65

Rated power	12W	Power Factor	> 0.9
LED Quantity	12pcs	Life	> 50000H
Color Temperature	6000k/4000k/3000k	THD	< 15%
Luminous Flux	1100lm	Frequency Range	50/60HZ
Input Voltage	AC100~277V	Lnstallation Pipe Diameter	/
Protection Grade	IP65	CRI	> 90
Operating Temperature	-30~50℃		

DM-CR91a

Standard colours

9004 9006 9007 9016

Bollard light

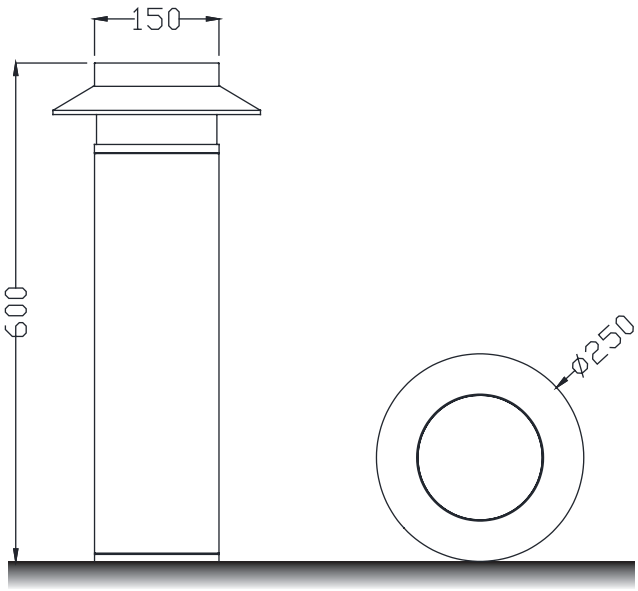

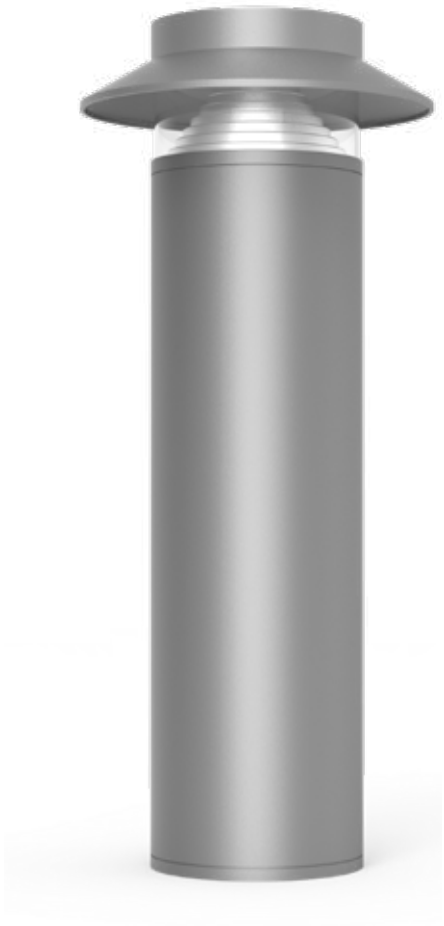

Installation plate

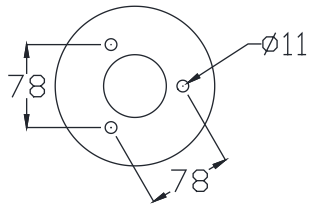

DM-CR92a

Colo(u)r temperature

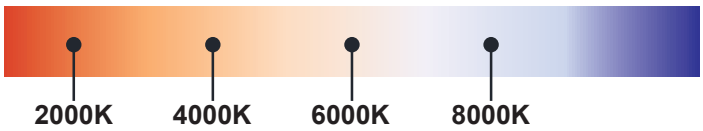

Bollard light

IP65

Rated power	12W	Power Factor	> 0.9
LED Quantity	12pcs	Life	> 50000H
Color Temperature	6000k/4000k/3000k	THD	< 15%
Luminous Flux	1100lm	Frequency Range	50/60HZ
Input Voltage	AC100~277V	Lnstallation Pipe Diameter	/
Protection Grade	IP65	CRI	> 90
Operating Temperature	-30~50℃		

DM-CR92a

Standard colours

9004 9006 9007 9016

Bollard light

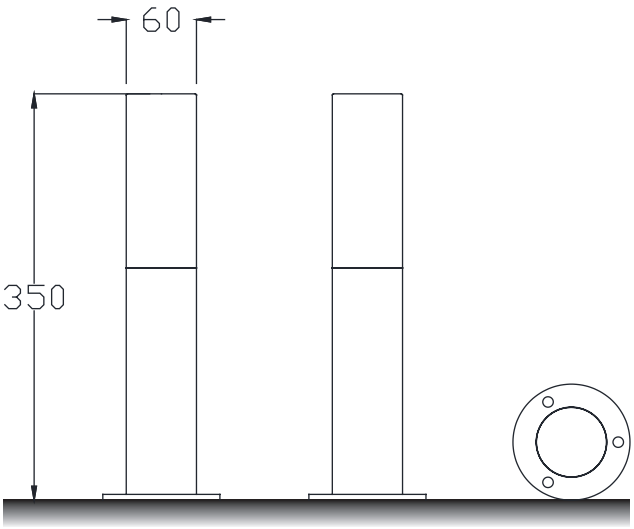

Installation plate

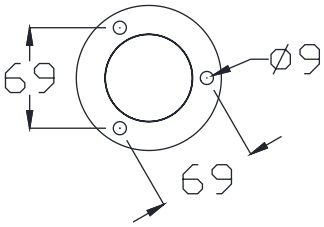

DM-CR93a

Colo(u)r temperature

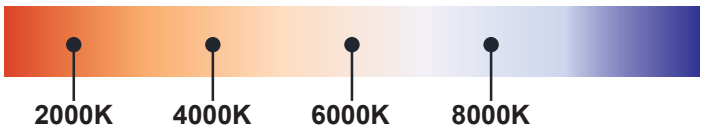

Bollard light

IP65

Rated power	12W	Power Factor	> 0.9
LED Quantity	12pcs	Life	> 50000H
Color Temperature	6000k/4000k/3000k	THD	< 15%
Luminous Flux	1100lm	Frequency Range	50/60HZ
Input Voltage	AC100~277V	Lnstallation Pipe Diameter	/
Protection Grade	IP65	CRI	> 90
Operating Temperature	-30~50℃		

DM-CR93a

Standard colours

9004 9006 9007 9016

Bollard light

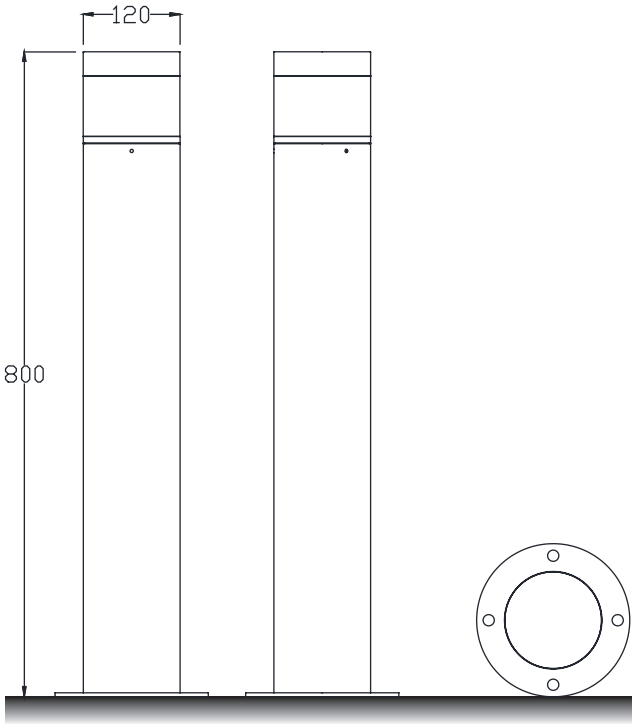

Installation plate

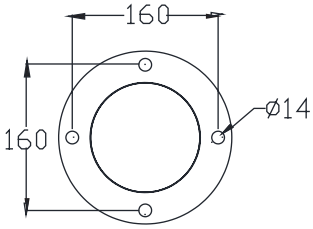

DM-CR94a

Colo(u)r temperature

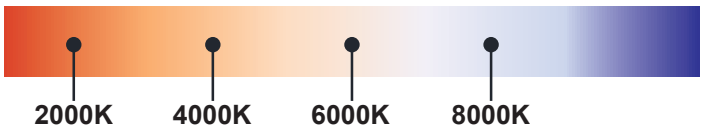

Bollard light

IP65

Rated power	12W	Power Factor	> 0.9
LED Quantity	12pcs	Life	> 50000H
Color Temperature	6000k/4000k/3000k	THD	< 15%
Luminous Flux	1100lm	Frequency Range	50/60HZ
Input Voltage	AC100~277V	Lnstallation Pipe Diameter	/
Protection Grade	IP65	CRI	> 90
Operating Temperature	-30~50℃		

DM-CR94a

Standard colours

9004 9006 9007 9016

Bollard light

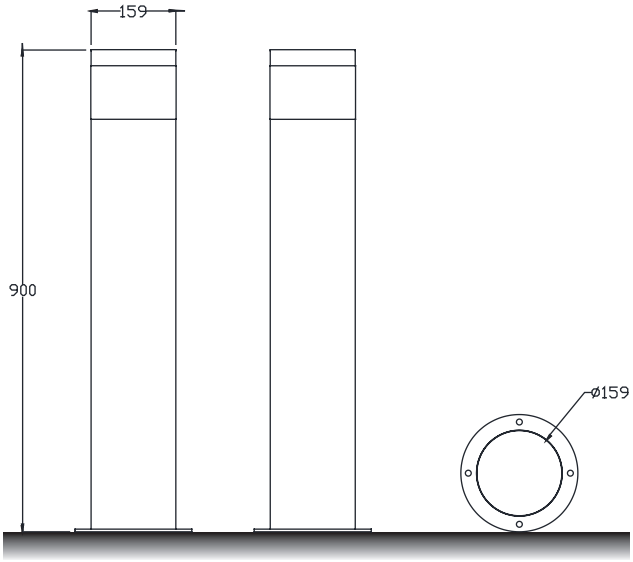

Installation plate

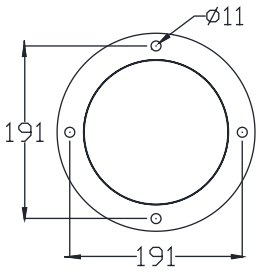

DM-CR95a

Colo(u)r temperature

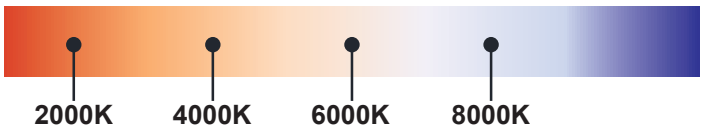

Bollard light

IP65

Rated power	12W	Power Factor	> 0.9
LED Quantity	12pcs	Life	> 50000H
Color Temperature	6000k/4000k/3000k	THD	< 15%
Luminous Flux	1100lm	Frequency Range	50/60HZ
Input Voltage	AC100~277V	Lnstallation Pipe Diameter	/
Protection Grade	IP65	CRI	> 90
Operating Temperature	-30~50℃		

DM-CR95a

Standard colours

9004 9006 9007 9016

Bollard light

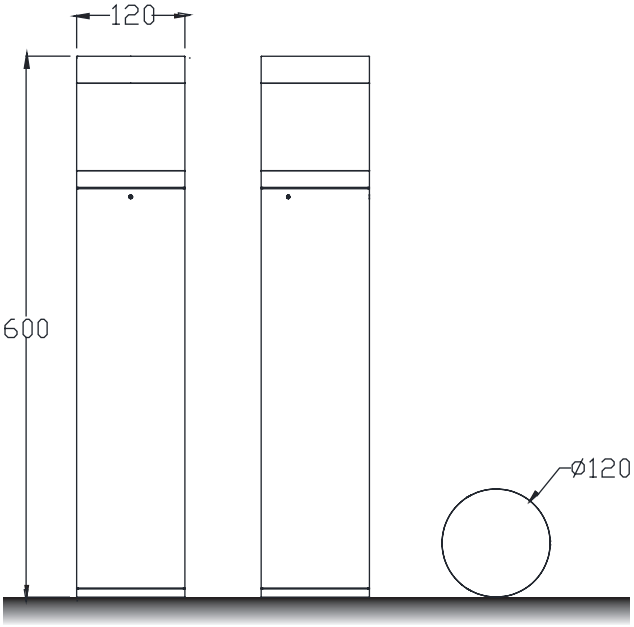

Installation plate

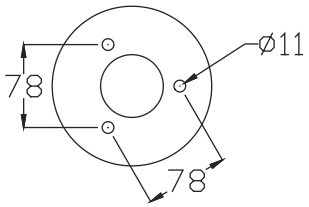

DM-CR96a

Colo(u)r temperature

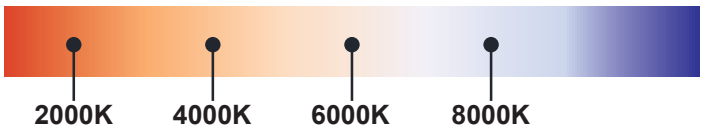

Bollard light

IP65

Rated power	12W	Power Factor	> 0.9
LED Quantity	12pcs	Life	> 50000H
Color Temperature	6000k/4000k/3000k	THD	< 15%
Luminous Flux	1100lm	Frequency Range	50/60HZ
Input Voltage	AC100~277V	Lnstallation Pipe Diameter	/
Protection Grade	IP65	CRI	> 90
Operating Temperature	-30~50℃		

DM-CR96a

Standard colours

9004 9006 9007 9016

Bollard light

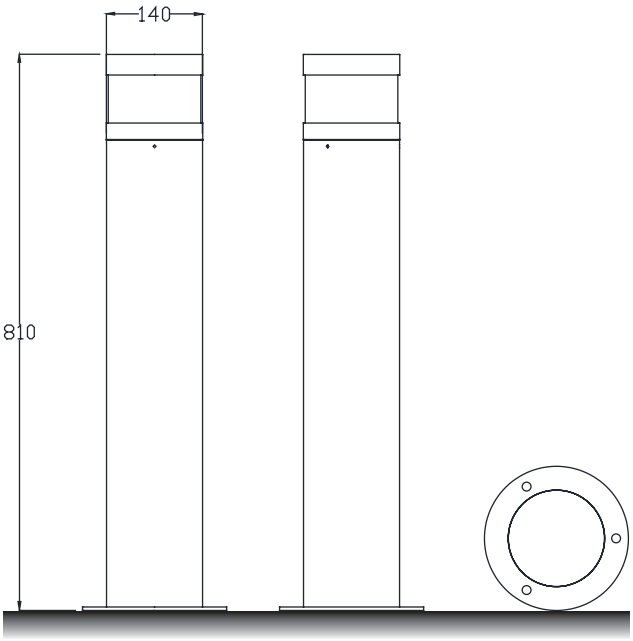

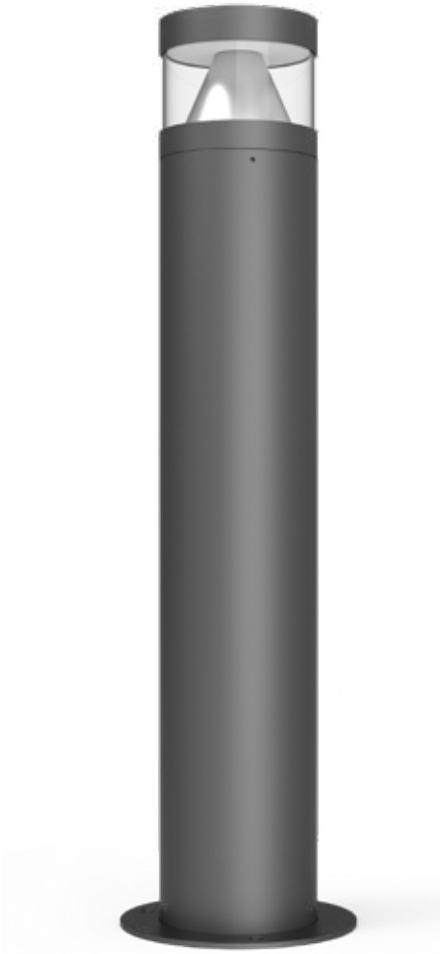

Installation plate

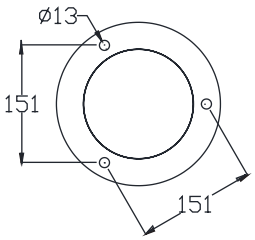

DM-CR97a

Colo(u)r temperature

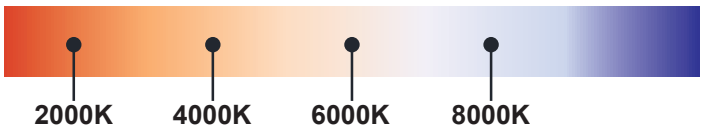

Bollard light

IP65

Rated power	12W	Power Factor	> 0.9
LED Quantity	12pcs	Life	> 50000H
Color Temperature	6000k/4000k/3000k	THD	< 15%
Luminous Flux	1100lm	Frequency Range	50/60HZ
Input Voltage	AC100~277V	Lnstallation Pipe Diameter	/
Protection Grade	IP65	CRI	> 90
Operating Temperature	-30~50℃		

DM-CR97a

Standard colours

9004 9006 9007 9016

Bollard light

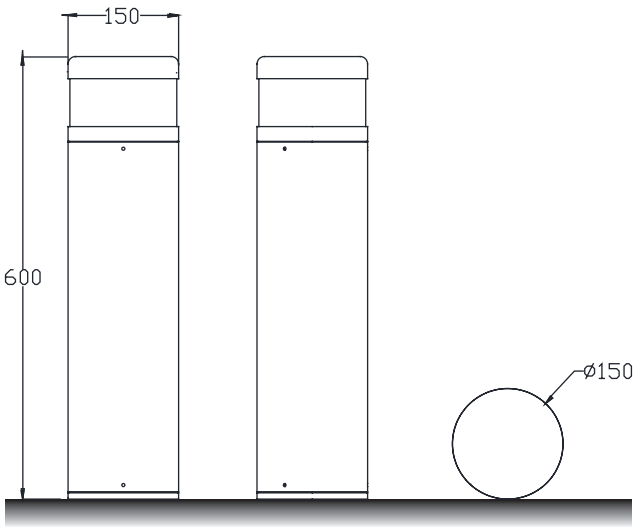

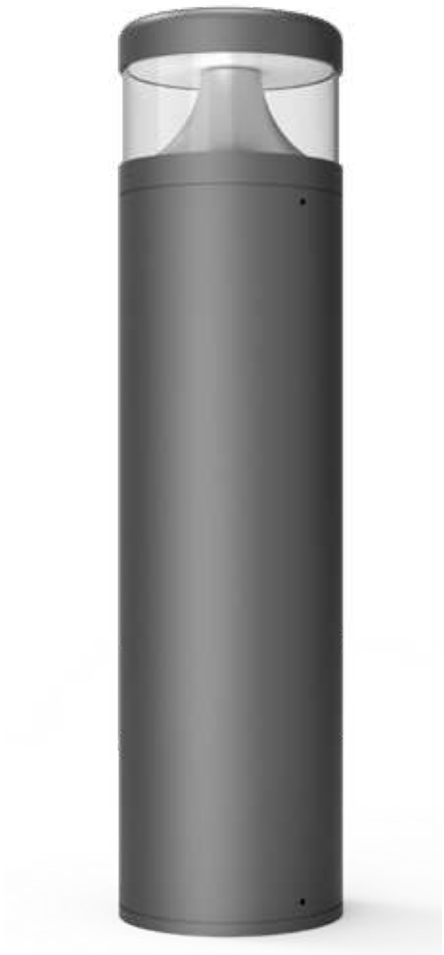

Installation plate

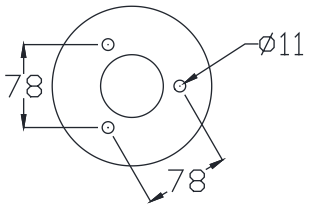

DM-CR98a

Colo(u)r temperature

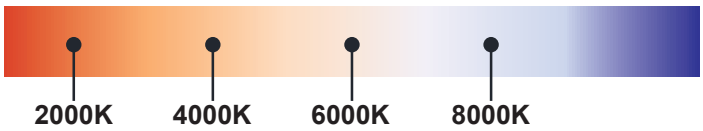

Bollard light

IP65

Rated power	12W	Power Factor	> 0.9
LED Quantity	12pcs	Life	> 50000H
Color Temperature	6000k/4000k/3000k	THD	< 15%
Luminous Flux	1100lm	Frequency Range	50/60HZ
Input Voltage	AC100~277V	Lnstallation Pipe Diameter	/
Protection Grade	IP65	CRI	> 90
Operating Temperature	-30~50℃		

DM-CR98a

Standard colours

9004 9006 9007 9016

Bollard light

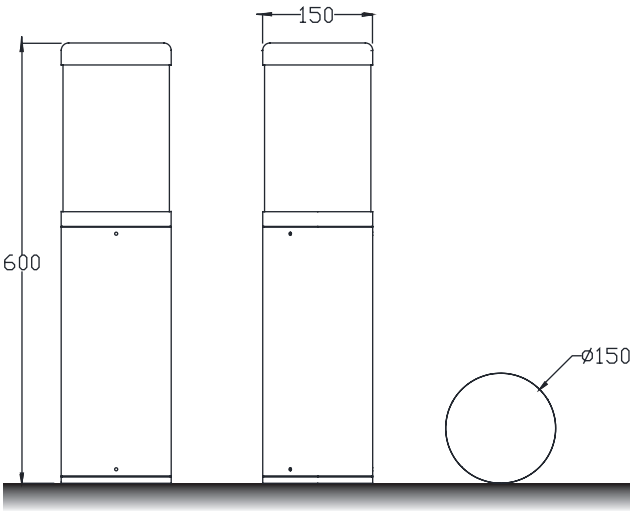

Installation plate

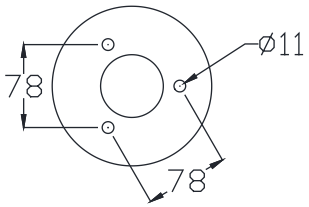

DM-CR99a

Colo(u)r temperature

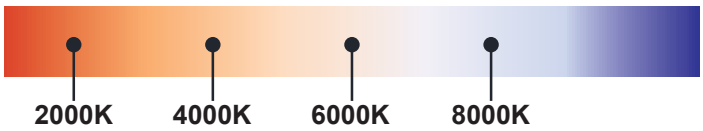

Bollard light

IP65

Rated power	12W	Power Factor	> 0.9
LED Quantity	12pcs	Life	> 50000H
Color Temperature	6000k/4000k/3000k	THD	< 15%
Luminous Flux	1100lm	Frequency Range	50/60HZ
Input Voltage	AC100~277V	Lnstallation Pipe Diameter	/
Protection Grade	IP65	CRI	> 90
Operating Temperature	-30~50℃		

DM-CR99a

Standard colours

9004 9006 9007 9016

Bollard light

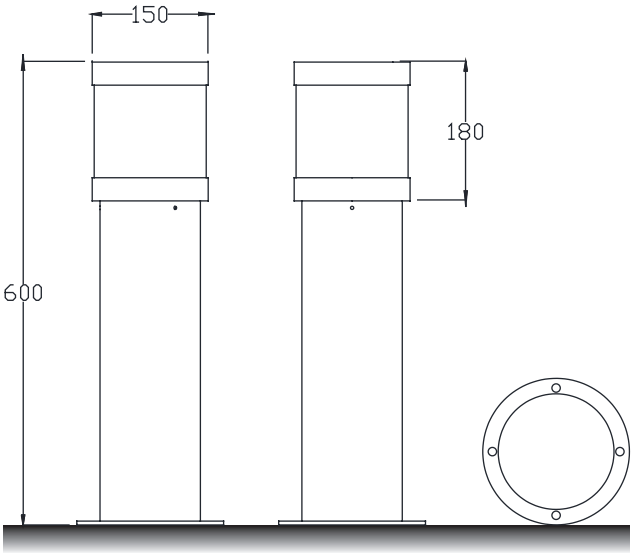

Installation plate

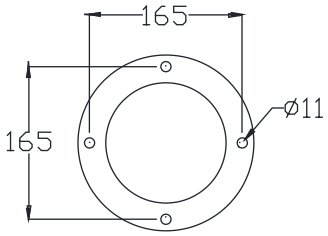

DM–CR100a

Colo(u)r temperature

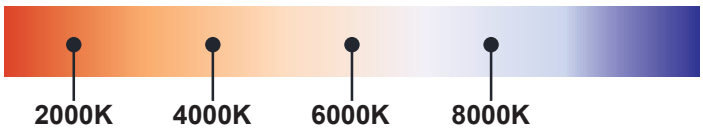

Bollard light

IP65

Rated power	12W	Power Factor	> 0.9
LED Quantity	12pcs	Life	> 50000H
Color Temperature	6000k/4000k/3000k	THD	< 15%
Luminous Flux	1100lm	Frequency Range	50/60HZ
Input Voltage	AC100~277V	Lnstallation Pipe Diameter	/
Protection Grade	IP65	CRI	> 90
Operating Temperature	-30~50℃		

DM-CR100a

Standard colours

9004 9006 9007 9016

Bollard light

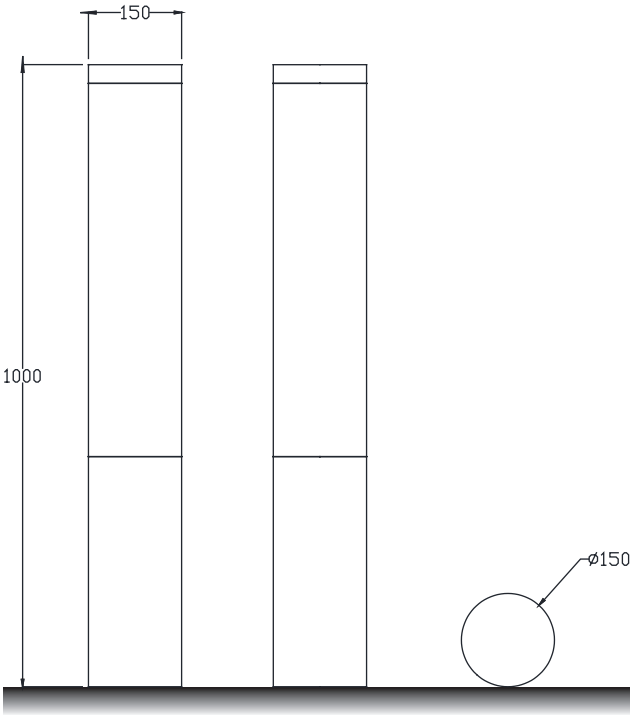

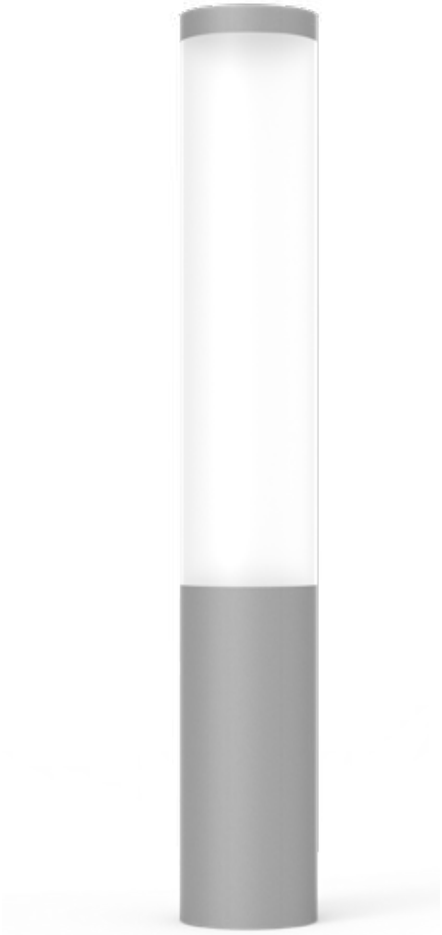

Installation plate

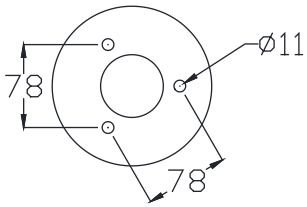

DM-CR101a

Colo(u)r temperature

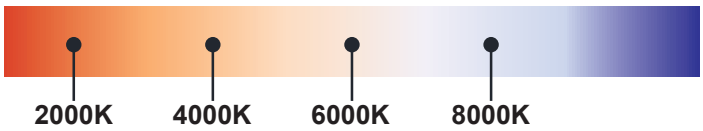

Bollard light

IP65

Rated power	12W	Power Factor	> 0.9
LED Quantity	12pcs	Life	> 50000H
Color Temperature	6000k/4000k/3000k	THD	< 15%
Luminous Flux	1100lm	Frequency Range	50/60HZ
Input Voltage	AC100~277V	Lnstallation Pipe Diameter	/
Protection Grade	IP65	CRI	> 90
Operating Temperature	-30~50℃		

DM-CR101a

Standard colours

9004 9006 9007 9016

Bollard light

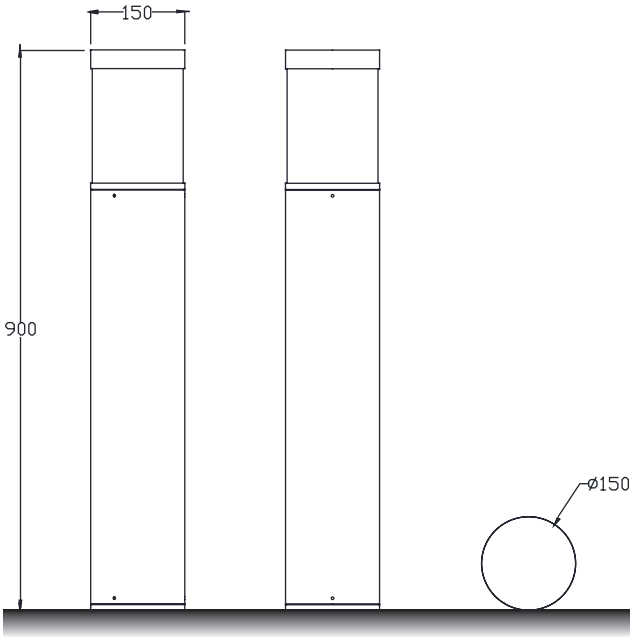

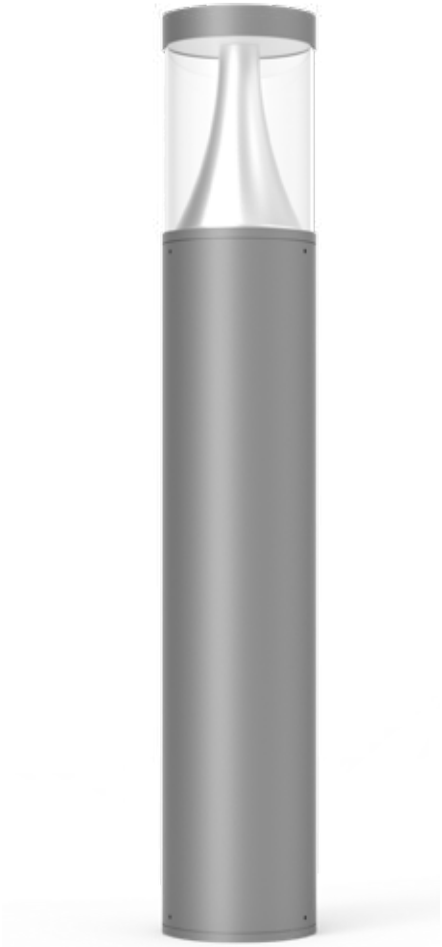

DM-CR102a

Installation plate

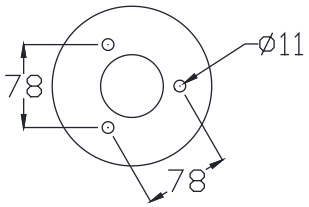

Colo(u)r temperature

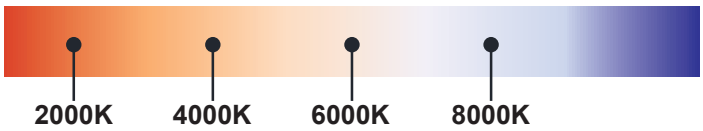

Bollard light

IP65

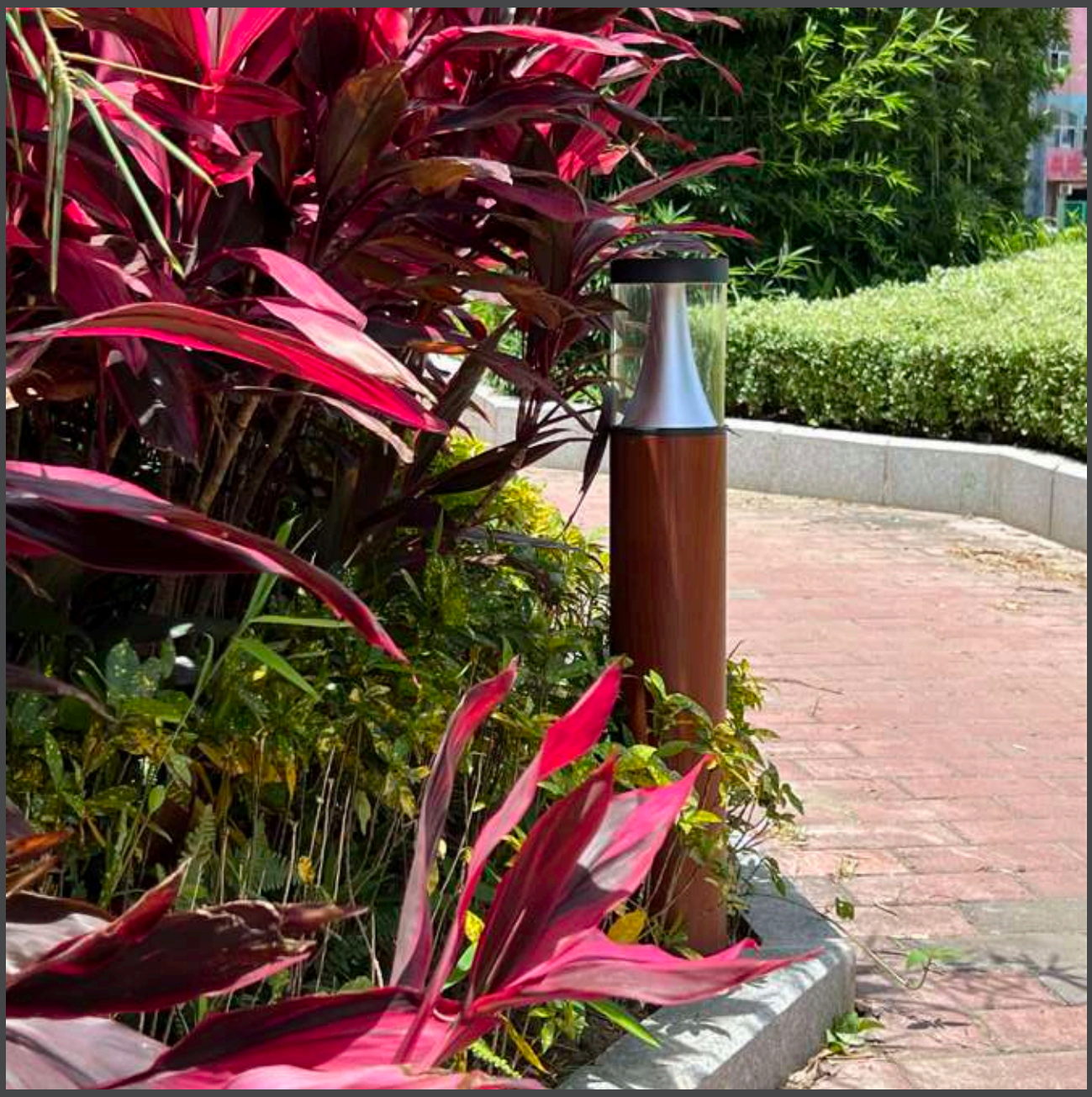

Rated power	12W	Power Factor	> 0.9
LED Quantity	12pcs	Life	> 50000H
Color Temperature	6000k/4000k/3000k	THD	< 15%
Luminous Flux	1100lm	Frequency Range	50/60HZ
Input Voltage	AC100~277V	Lnstallation Pipe Diameter	/
Protection Grade	IP65	CRI	> 90
Operating Temperature	-30~50℃		

DM-CR102a

Standard colours

9004 9006 9007 9016

Bollard light

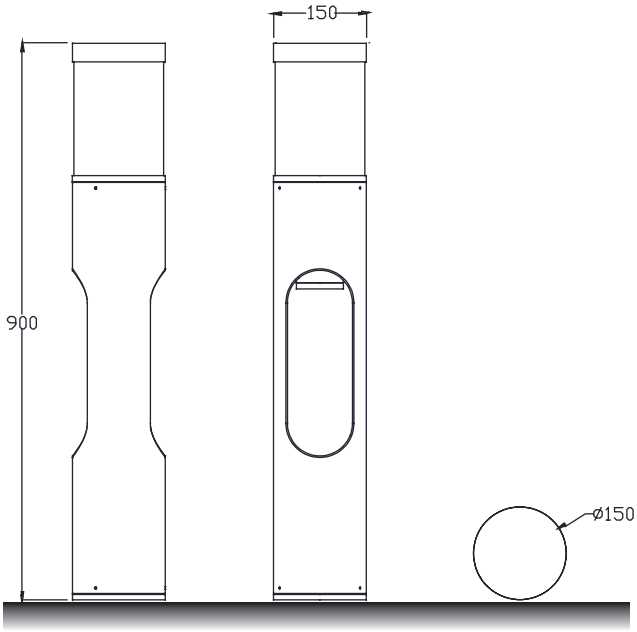

Installation plate

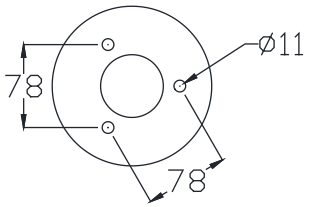

DM-CR103a

Colo(u)r temperature

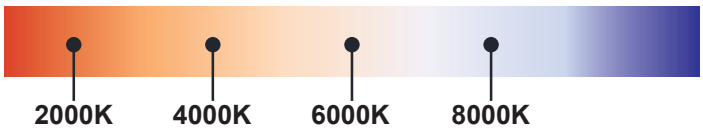

Bollard light

IP65

Rated power	12W	Power Factor	> 0.9
LED Quantity	12pcs	Life	> 50000H
Color Temperature	6000k/4000k/3000k	THD	< 15%
Luminous Flux	1100lm	Frequency Range	50/60HZ
Input Voltage	AC100~277V	Lnstallation Pipe Diameter	/
Protection Grade	IP65	CRI	> 90
Operating Temperature	-30~50℃		

DM-CR103a

Standard colours

9004 9006 9007 9016

Bollard light

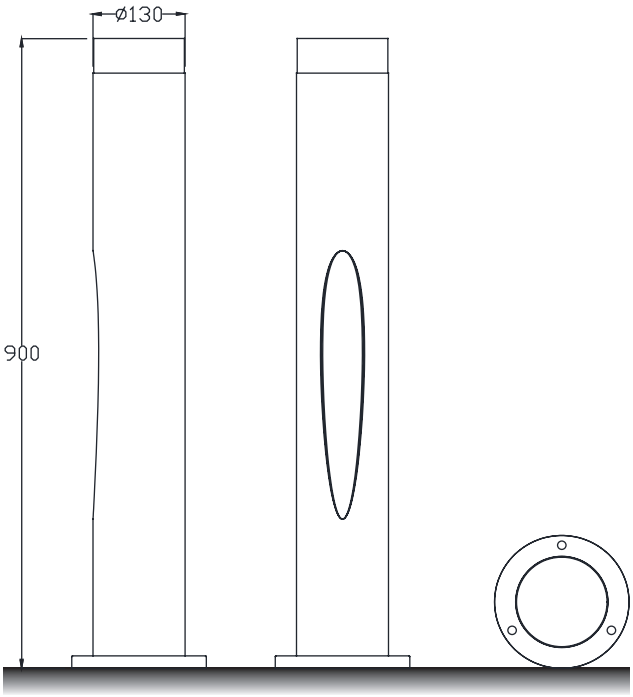

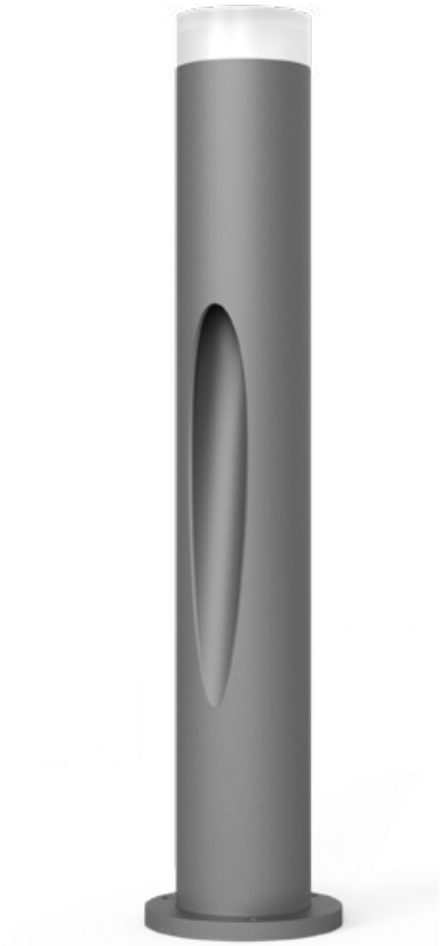

DM–CR104a

Installation plate

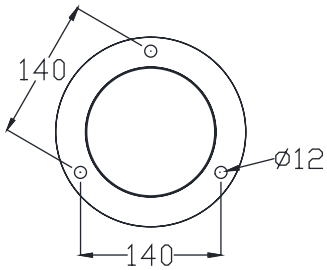

Colo(u)r temperature

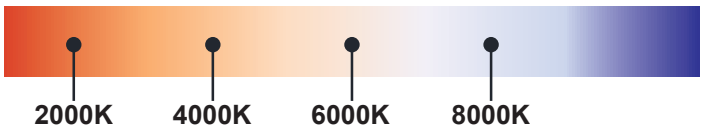

Bollard light

IP65

Rated power	12W	Power Factor	> 0.9
LED Quantity	12pcs	Life	> 50000H
Color Temperature	6000k/4000k/3000k	THD	< 15%
Luminous Flux	1100lm	Frequency Range	50/60HZ
Input Voltage	AC100~277V	Lnstallation Pipe Diameter	/
Protection Grade	IP65	CRI	> 90
Operating Temperature	-30~50℃		

DM-CR104a

Standard colours

9004 9006 9007 9016

Bollard light

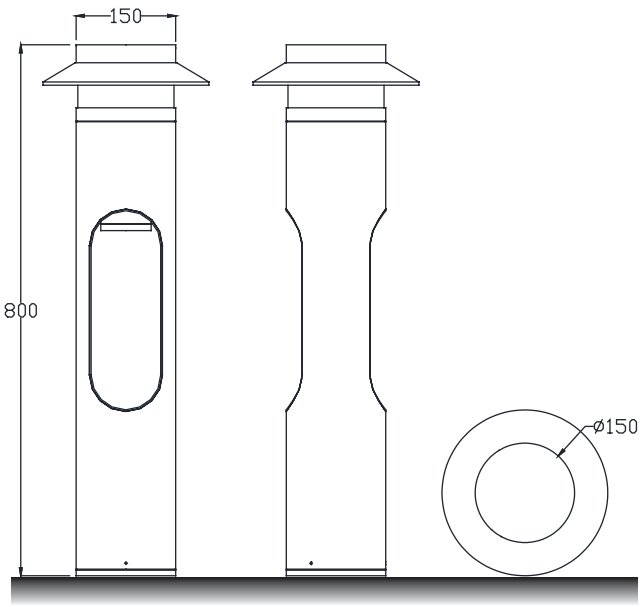

Installation plate

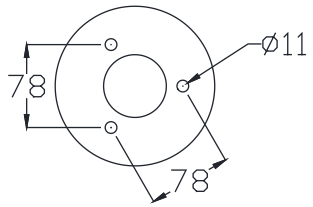

DM-CR105a

Colo(u)r temperature

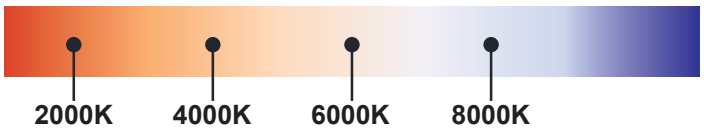

Bollard light

IP65

Rated power	12W	Power Factor	> 0.9
LED Quantity	12pcs	Life	> 50000H
Color Temperature	6000k/4000k/3000k	THD	< 15%
Luminous Flux	1100lm	Frequency Range	50/60HZ
Input Voltage	AC100~277V	Lnstallation Pipe Diameter	/
Protection Grade	IP65	CRI	> 90
Operating Temperature	-30~50℃		

DM-CR105a

Standard colours

9004 9006 9007 9016

Bollard light

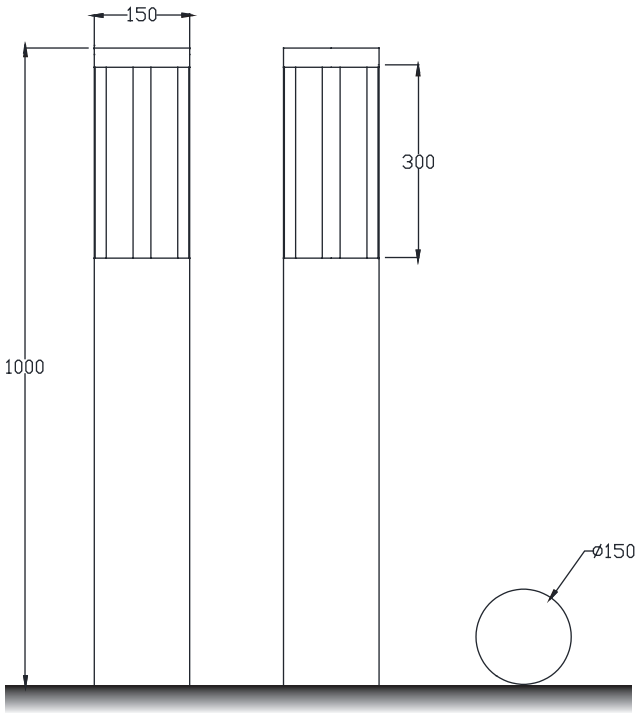

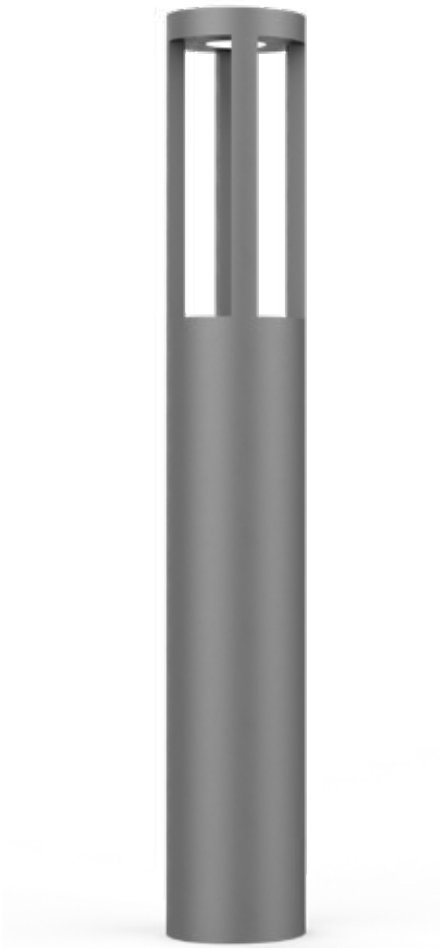

Installation plate

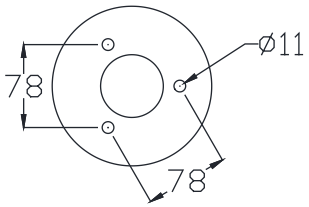

DM-CR106a

Colo(u)r temperature

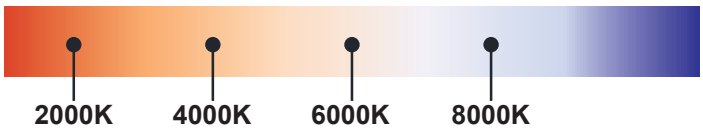

Bollard light

IP65

Rated power	12W	Power Factor	> 0.9
LED Quantity	12pcs	Life	> 50000H
Color Temperature	6000k/4000k/3000k	THD	< 15%
Luminous Flux	1100lm	Frequency Range	50/60HZ
Input Voltage	AC100~277V	Lnstallation Pipe Diameter	/
Protection Grade	IP65	CRI	> 90
Operating Temperature	-30~50℃		

DM-CR106a

Standard colours

9004 9006 9007 9016

Bollard light

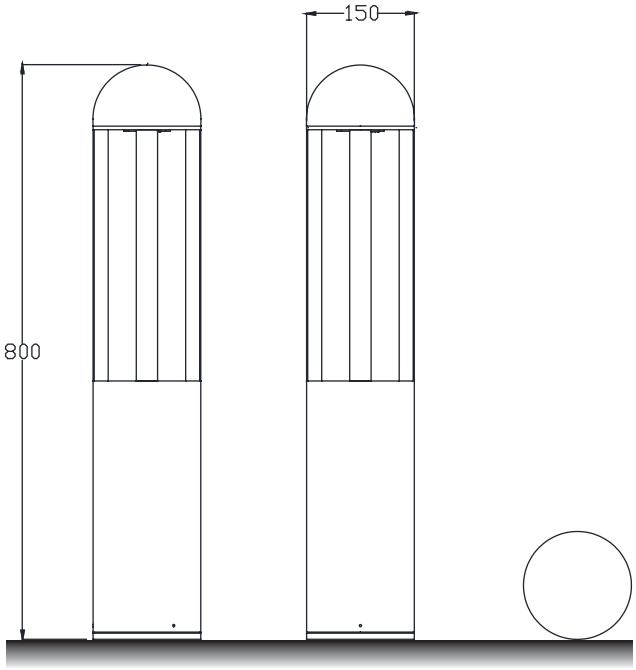

Installation plate

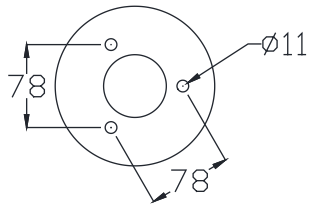

DM-CR107a

Colo(u)r temperature

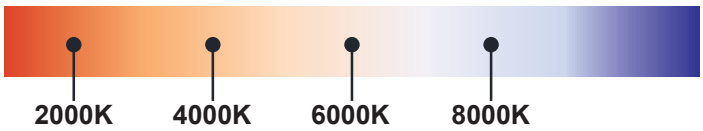

Bollard light

IP65

Rated power	12W	Power Factor	> 0.9
LED Quantity	12pcs	Life	> 50000H
Color Temperature	6000k/4000k/3000k	THD	< 15%
Luminous Flux	1100lm	Frequency Range	50/60HZ
Input Voltage	AC100~277V	Lnstallation Pipe Diameter	/
Protection Grade	IP65	CRI	> 90
Operating Temperature	-30~50℃		

DM-CR107a

Standard colours

9004 9006 9007 9016

Bollard light

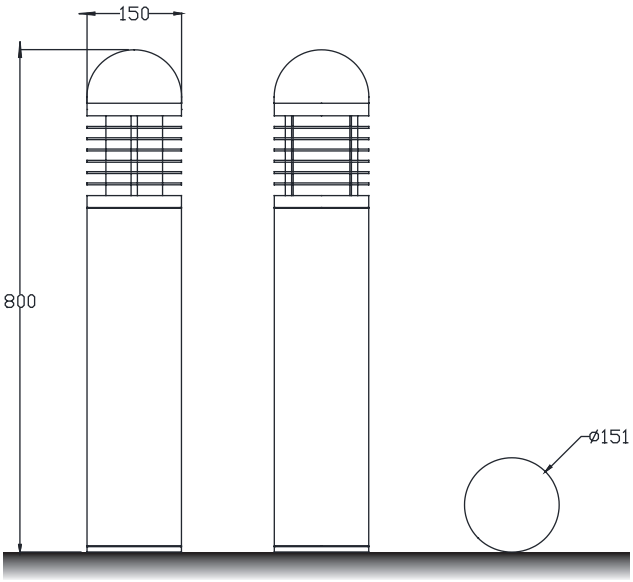

Installation plate

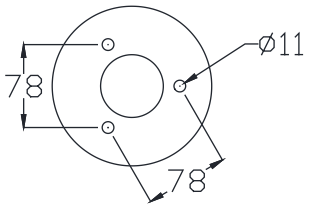

DM-CR108a

Colo(u)r temperature

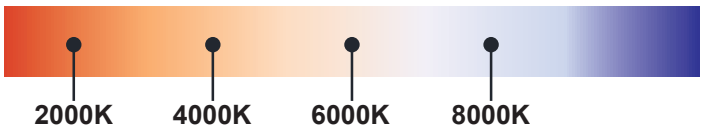

Bollard light

IP65

Rated power	12W	Power Factor	> 0.9
LED Quantity	12pcs	Life	> 50000H
Color Temperature	6000k/4000k/3000k	THD	< 15%
Luminous Flux	1100lm	Frequency Range	50/60HZ
Input Voltage	AC100~277V	Lnstallation Pipe Diameter	/
Protection Grade	IP65	CRI	> 90
Operating Temperature	-30~50℃		

DM-CR108a

Standard colours

9004 9006 9007 9016

Bollard light

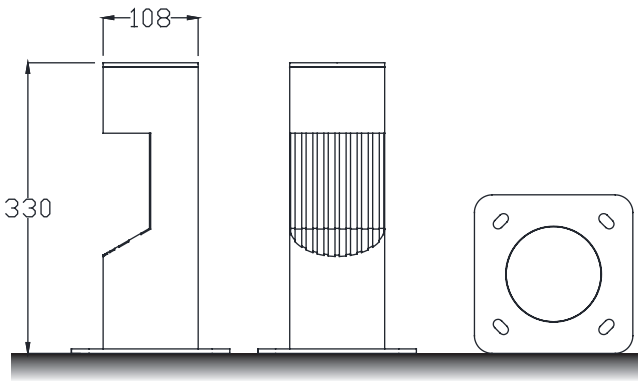

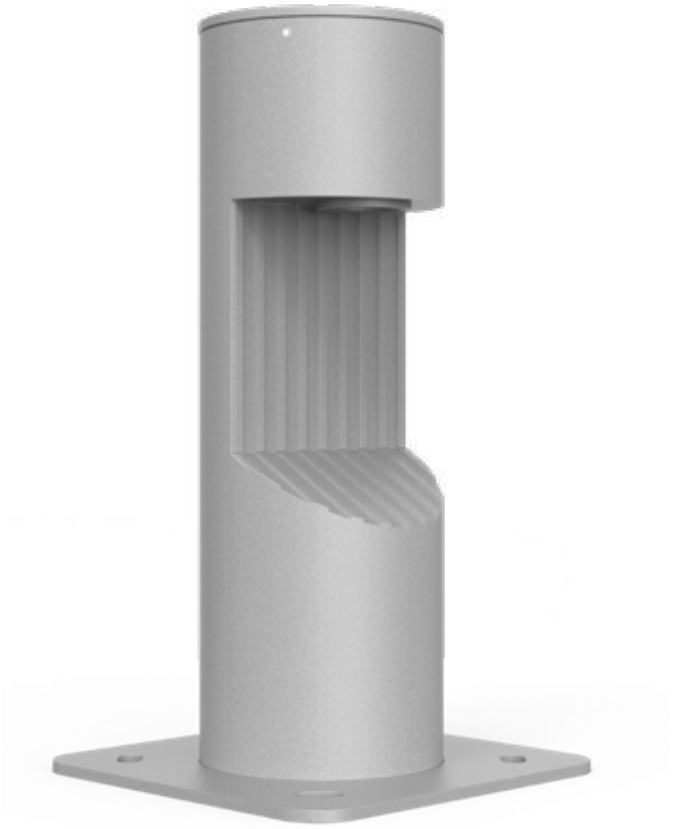

Installation plate

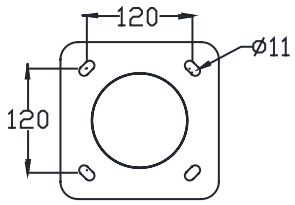

DM–CR109a

Colo(u)r temperature

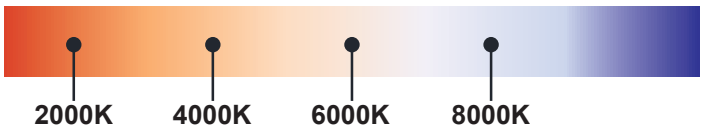

Bollard light

IP65

Rated power	12W	Power Factor	> 0.9
LED Quantity	12pcs	Life	> 50000H
Color Temperature	6000k/4000k/3000k	THD	< 15%
Luminous Flux	1100lm	Frequency Range	50/60HZ
Input Voltage	AC100~277V	Lnstallation Pipe Diameter	/
Protection Grade	IP65	CRI	> 90
Operating Temperature	-30~50℃		

DM-CR109a

Standard colours

9004 9006 9007 9016

Bollard light

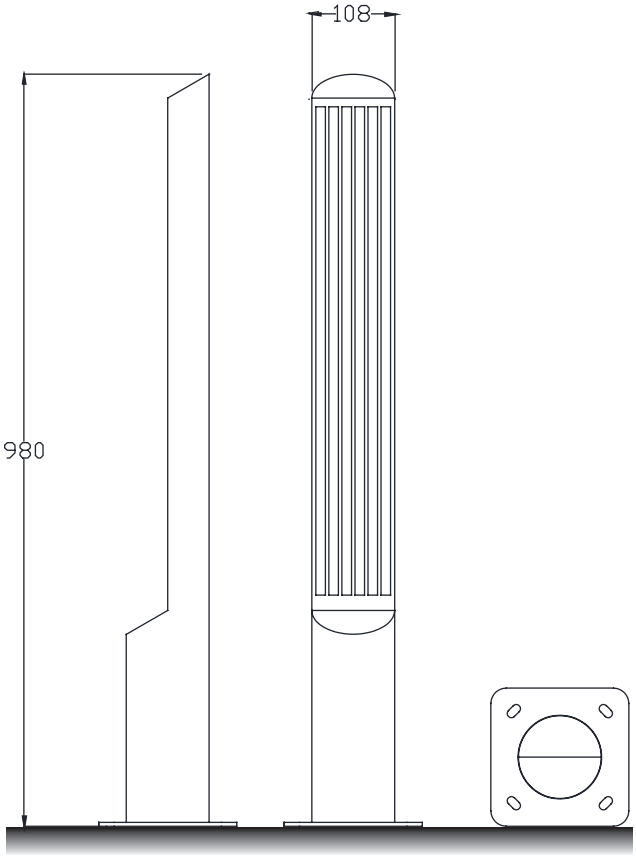

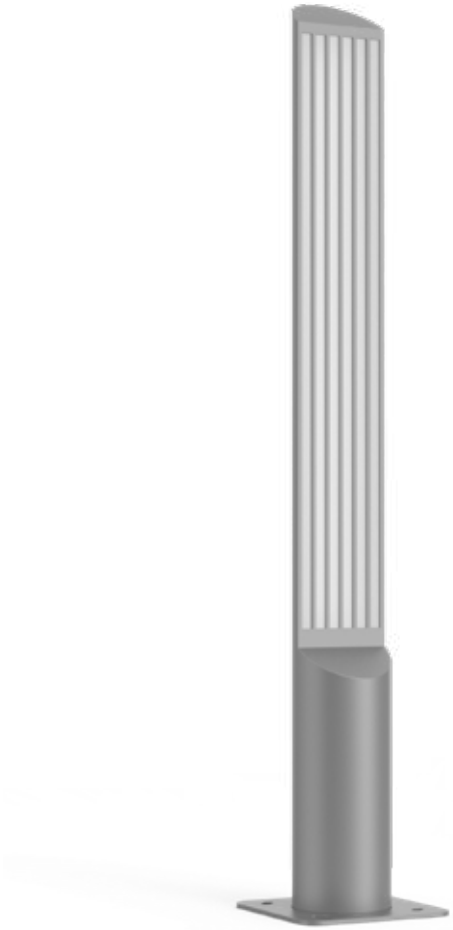

DM-CR110a

Installation plate

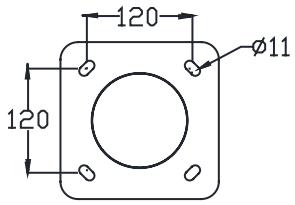

Colo(u)r temperature

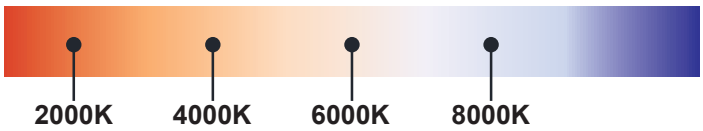

Bollard light

IP65

Rated power	12W	Power Factor	> 0.9
LED Quantity	12pcs	Life	> 50000H
Color Temperature	6000k/4000k/3000k	THD	< 15%
Luminous Flux	1100lm	Frequency Range	50/60HZ
Input Voltage	AC100~277V	Lnstallation Pipe Diameter	/
Protection Grade	IP65	CRI	> 90
Operating Temperature	-30~50℃		

DM-CR110a

Standard colours

9004 9006 9007 9016

Bollard light

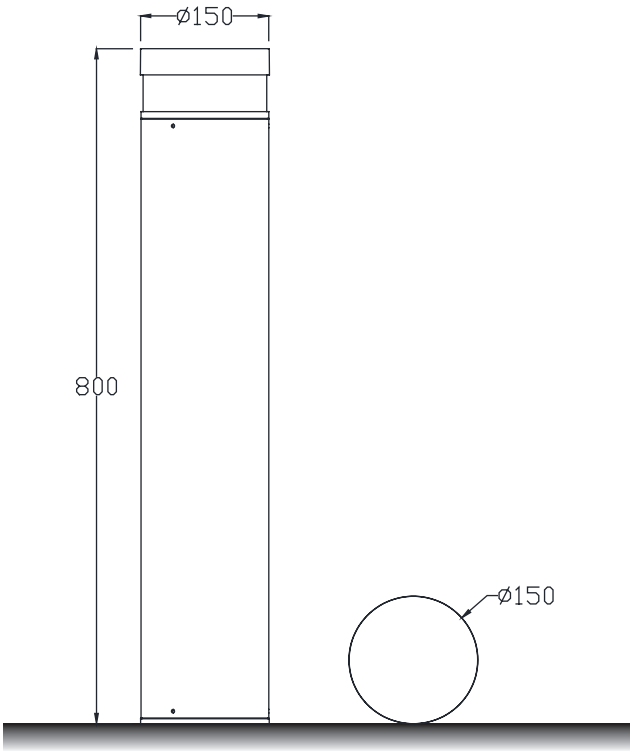

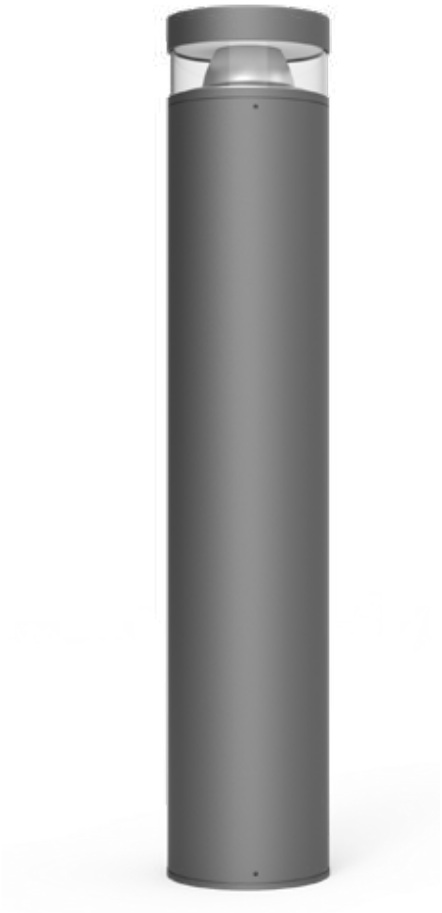

Installation plate

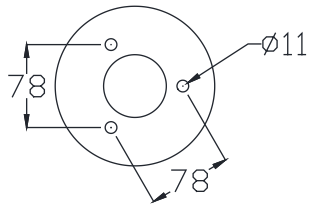

DM–CR111a

Colo(u)r temperature

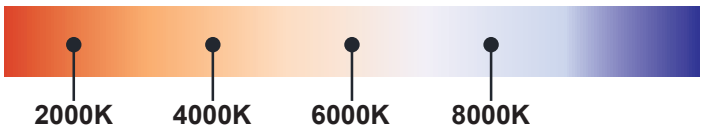

Bollard light

IP65

Rated power	12W	Power Factor	> 0.9
LED Quantity	12pcs	Life	> 50000H
Color Temperature	6000k/4000k/3000k	THD	< 15%
Luminous Flux	1100lm	Frequency Range	50/60HZ
Input Voltage	AC100~277V	Lnstallation Pipe Diameter	/
Protection Grade	IP65	CRI	> 90
Operating Temperature	-30~50℃		

DM-CR111a

Standard colours

9004 9006 9007 9016

Bollard light

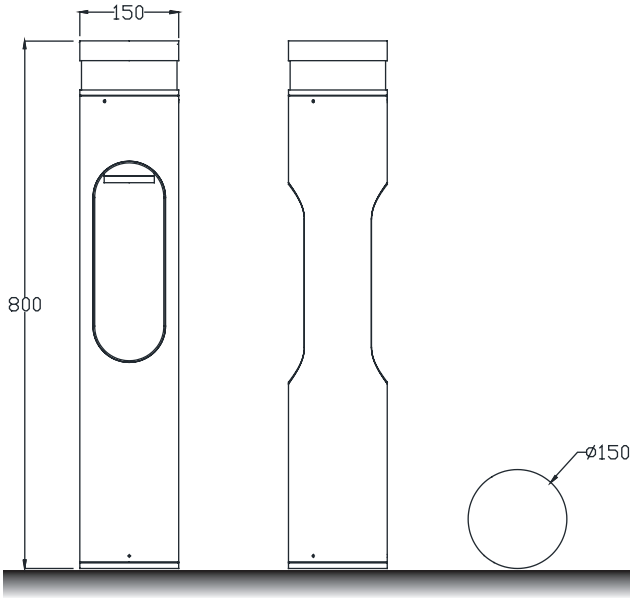

Installation plate

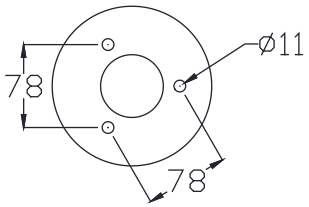

DM-CR112a

Colo(u)r temperature

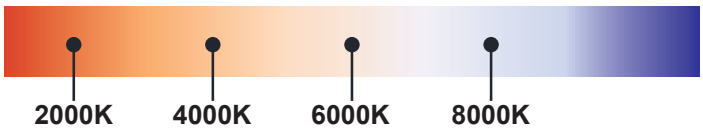

Bollard light

IP65

Rated power	12W	Power Factor	> 0.9
LED Quantity	12pcs	Life	> 50000H
Color Temperature	6000k/4000k/3000k	THD	< 15%
Luminous Flux	1100lm	Frequency Range	50/60HZ
Input Voltage	AC100~277V	Lnstallation Pipe Diameter	/
Protection Grade	IP65	CRI	> 90
Operating Temperature	-30~50℃		

DM-CR112a

Standard colours

9004 9006 9007 9016

Bollard light

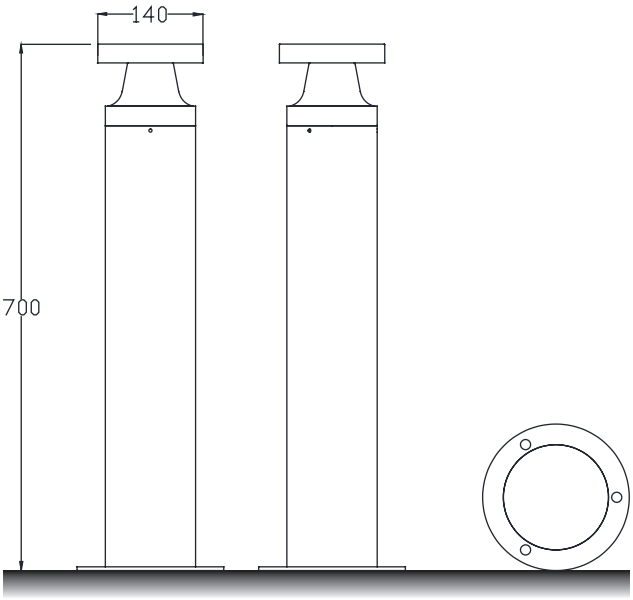

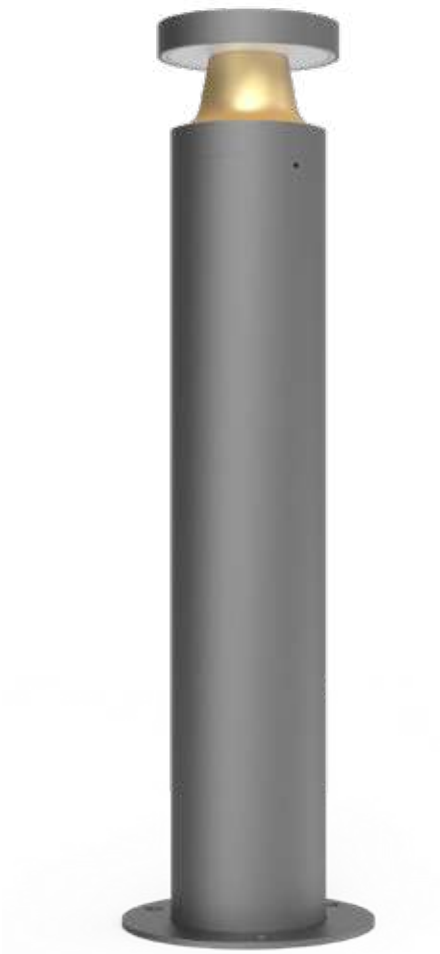

Installation plate

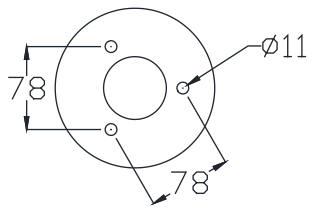

DM-CR113a

Colo(u)r temperature

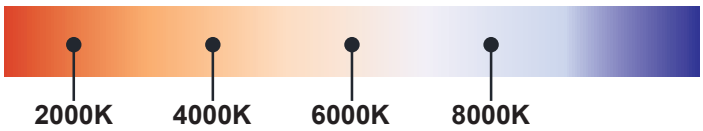

Bollard light

IP65

Rated power	12W	Power Factor	> 0.9
LED Quantity	12pcs	Life	> 50000H
Color Temperature	6000k/4000k/3000k	THD	< 15%
Luminous Flux	1100lm	Frequency Range	50/60HZ
Input Voltage	AC100~277V	Lnstallation Pipe Diameter	/
Protection Grade	IP65	CRI	> 90
Operating Temperature	-30~50℃		

DM-CR113a

Standard colours

9004 9006 9007 9016

Bollard light

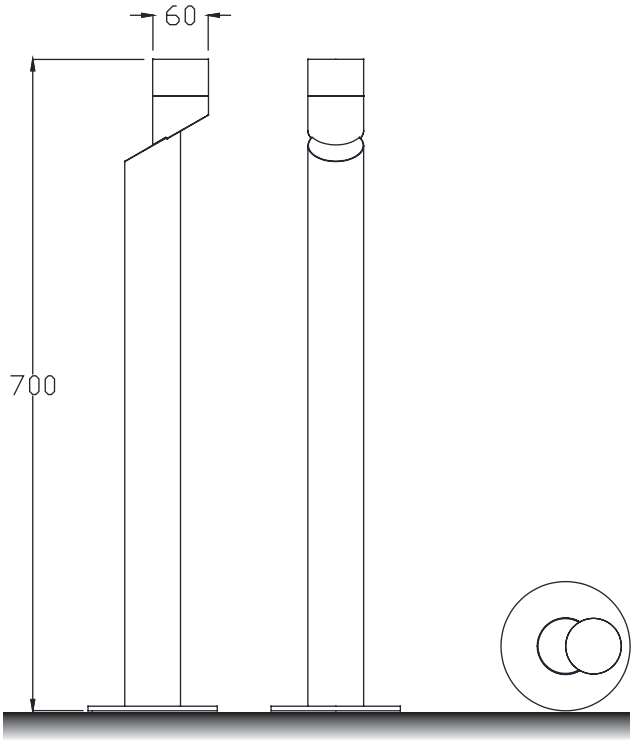

Installation plate

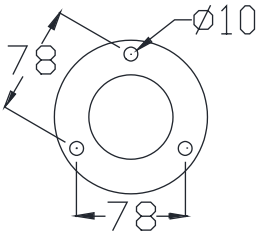

DM-CR114a

Colo(u)r temperature

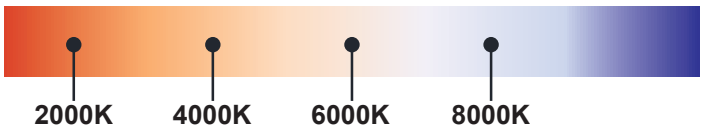

Bollard light

IP65

Rated power	12W	Power Factor	> 0.9
LED Quantity	12pcs	Life	> 50000H
Color Temperature	6000k/4000k/3000k	THD	< 15%
Luminous Flux	1100lm	Frequency Range	50/60HZ
Input Voltage	AC100~277V	Lnstallation Pipe Diameter	/
Protection Grade	IP65	CRI	> 90
Operating Temperature	-30~50℃		

DM-CR114a

Standard colours

9004 9006 9007 9016

Bollard light

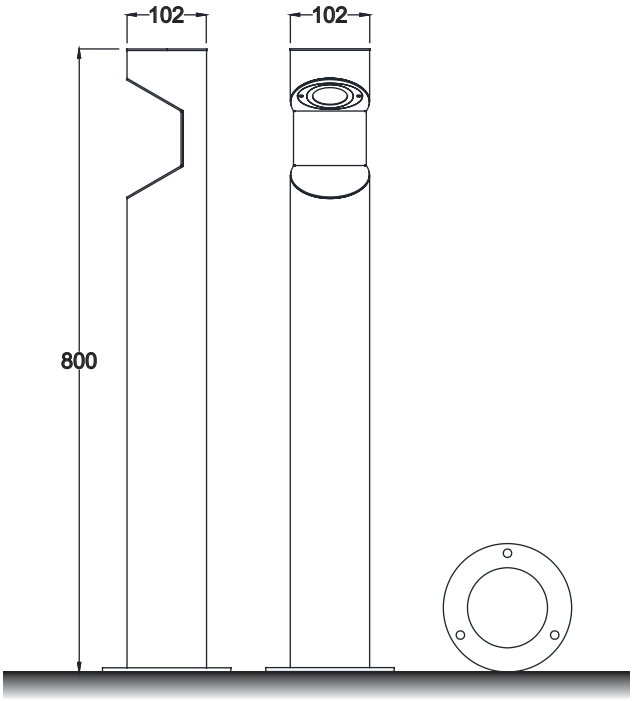

Installation plate

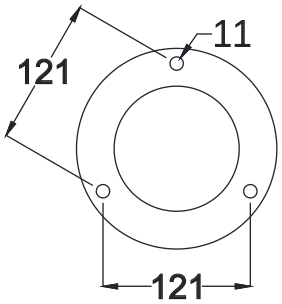

DM–CR115a

Colo(u)r temperature

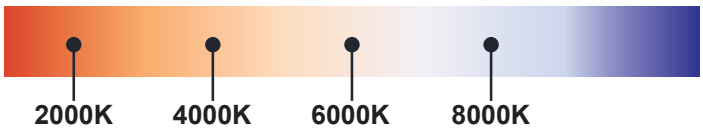

Bollard light

IP65

Rated power	12W	Power Factor	> 0.9
LED Quantity	12pcs	Life	> 50000H
Color Temperature	6000k/4000k/3000k	THD	< 15%
Luminous Flux	1100lm	Frequency Range	50/60HZ
Input Voltage	AC100~277V	Lnstallation Pipe Diameter	/
Protection Grade	IP65	CRI	> 90
Operating Temperature	-30~50℃		

DM-CR115a

Standard colours

9004 9006 9007 9016

Bollard light

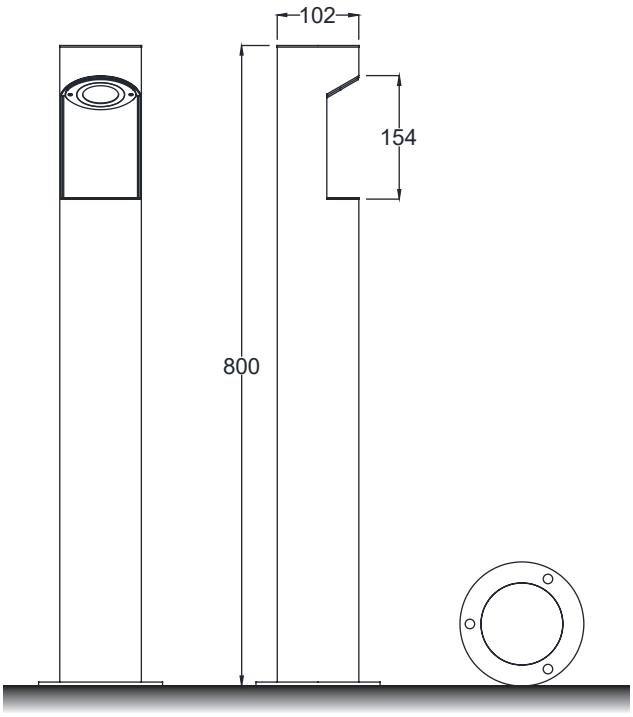

Installation plate

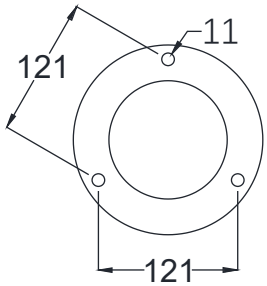

DM–CR116a

Colo(u)r temperature

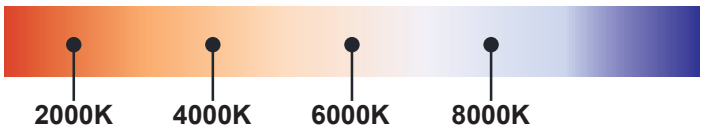

Bollard light

IP65

Rated power	12W	Power Factor	> 0.9
LED Quantity	12pcs	Life	> 50000H
Color Temperature	6000k/4000k/3000k	THD	< 15%
Luminous Flux	1100lm	Frequency Range	50/60HZ
Input Voltage	AC100~277V	Lnstallation Pipe Diameter	/
Protection Grade	IP65	CRI	> 90
Operating Temperature	-30~50℃		

DM-CR116a

Standard colours

9004 9006 9007 9016

Bollard light

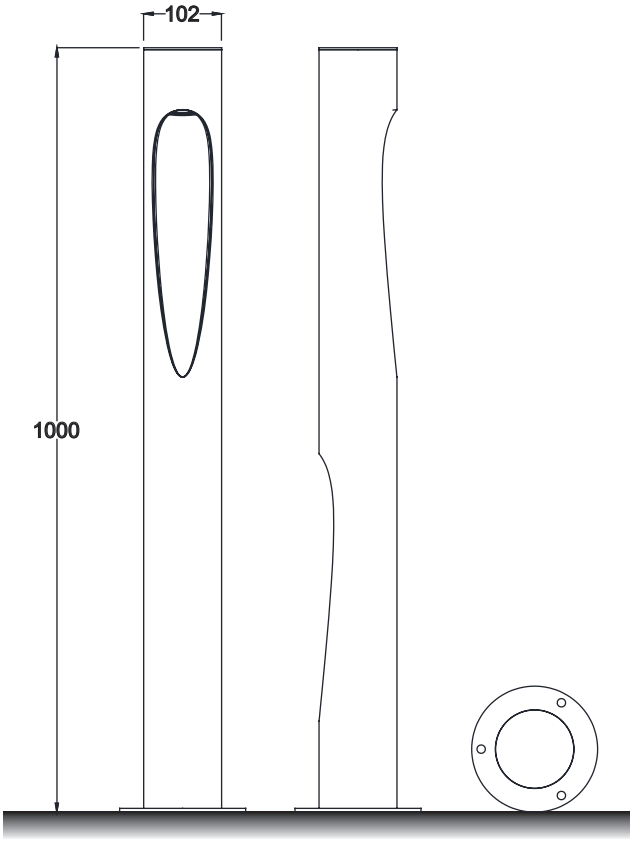

Installation plate

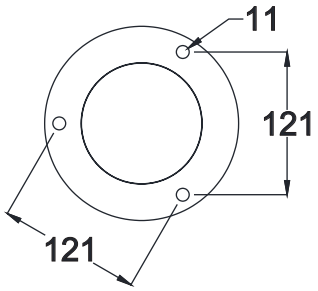

DM–CR117a

Colo(u)r temperature

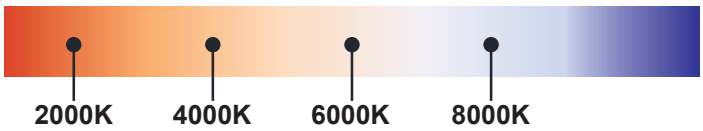

Bollard light

IP65

Rated power	12W	Power Factor	> 0.9
LED Quantity	12pcs	Life	> 50000H
Color Temperature	6000k/4000k/3000k	THD	< 15%
Luminous Flux	1100lm	Frequency Range	50/60HZ
Input Voltage	AC100~277V	Lnstallation Pipe Diameter	/
Protection Grade	IP65	CRI	> 90
Operating Temperature	-30~50℃		

DM-CR117a

Standard colours

9004 9006 9007 9016

Bollard light

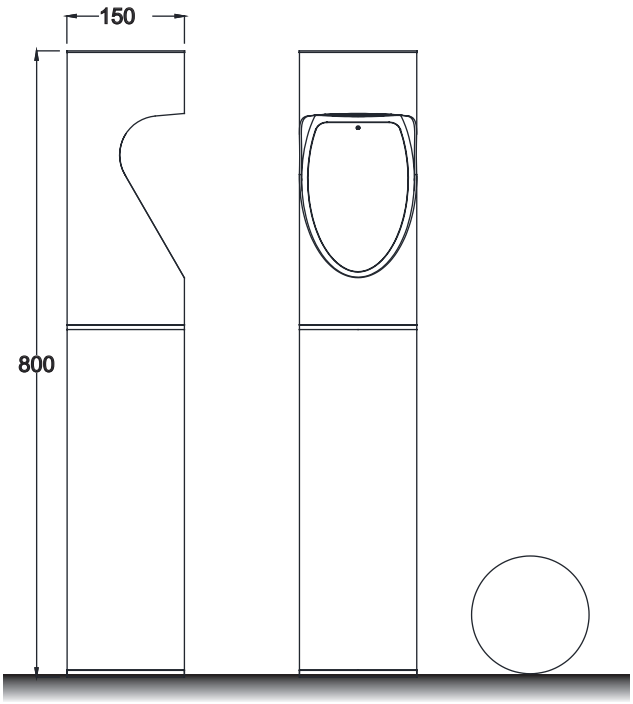

Installation plate

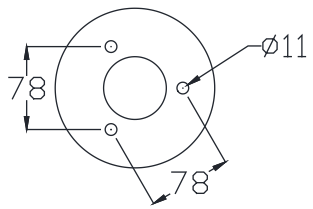

DM-CR118a

Colo(u)r temperature

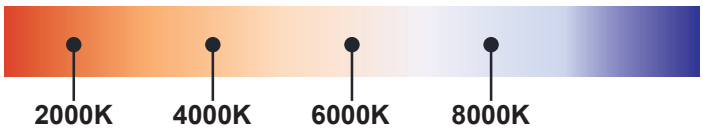

Bollard light

IP65

Rated power	12W	Power Factor	> 0.9
LED Quantity	12pcs	Life	> 50000H
Color Temperature	6000k/4000k/3000k	THD	< 15%
Luminous Flux	1100lm	Frequency Range	50/60HZ
Input Voltage	AC100~277V	Lnstallation Pipe Diameter	/
Protection Grade	IP65	CRI	> 90
Operating Temperature	-30~50℃		

DM-CR118a

Standard colours

9004 9006 9007 9016

Bollard light

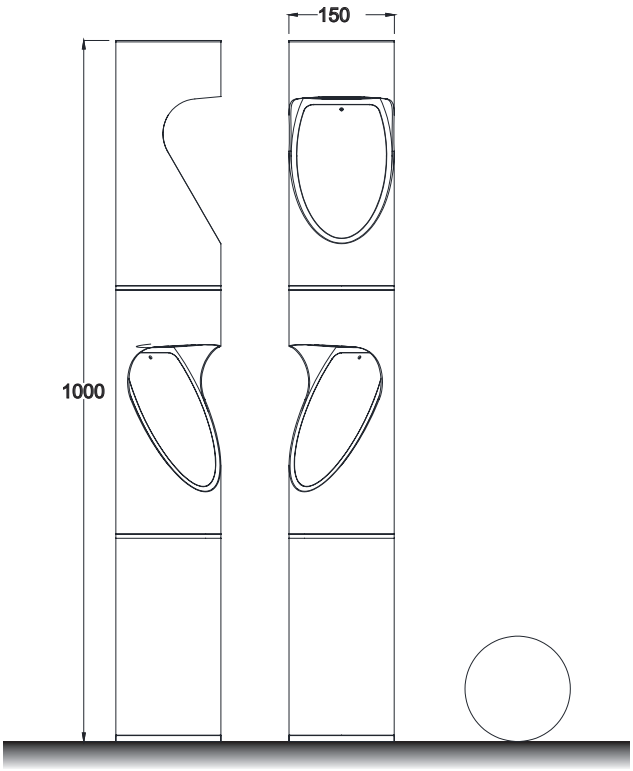

Installation plate

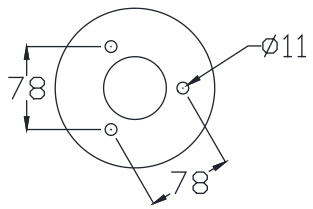

DM-CR118b

Colo(u)r temperature

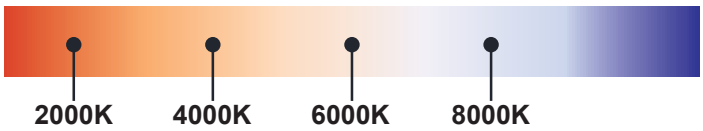

Bollard light

IP65

Rated power	12W	Power Factor	> 0.9
LED Quantity	12pcs	Life	> 50000H
Color Temperature	6000k/4000k/3000k	THD	< 15%
Luminous Flux	1100lm	Frequency Range	50/60HZ
Input Voltage	AC100~277V	Lnstallation Pipe Diameter	/
Protection Grade	IP65	CRI	> 90
Operating Temperature	-30~50℃		

DM-CR118c

Standard colours

9004 9006 9007 9016

Bollard light

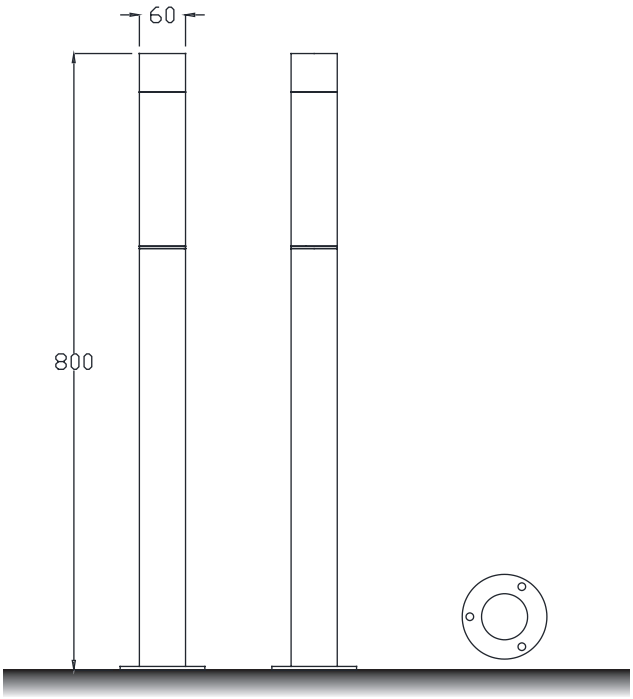

DM-CR119a

Installation plate

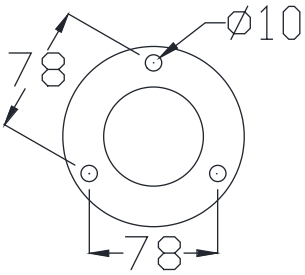

Colo(u)r temperature

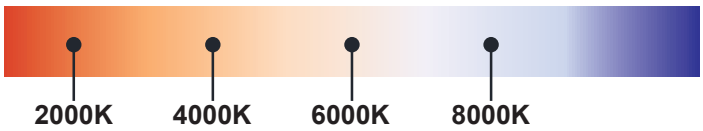

Bollard light

IP65

Rated power	12W	Power Factor	> 0.9
LED Quantity	12pcs	Life	> 50000H
Color Temperature	6000k/4000k/3000k	THD	< 15%
Luminous Flux	1100lm	Frequency Range	50/60HZ
Input Voltage	AC100~277V	Lnstallation Pipe Diameter	/
Protection Grade	IP65	CRI	> 90
Operating Temperature	-30~50℃		

DM-CR119a

Standard colours

9004 9006 9007 9016

Bollard light

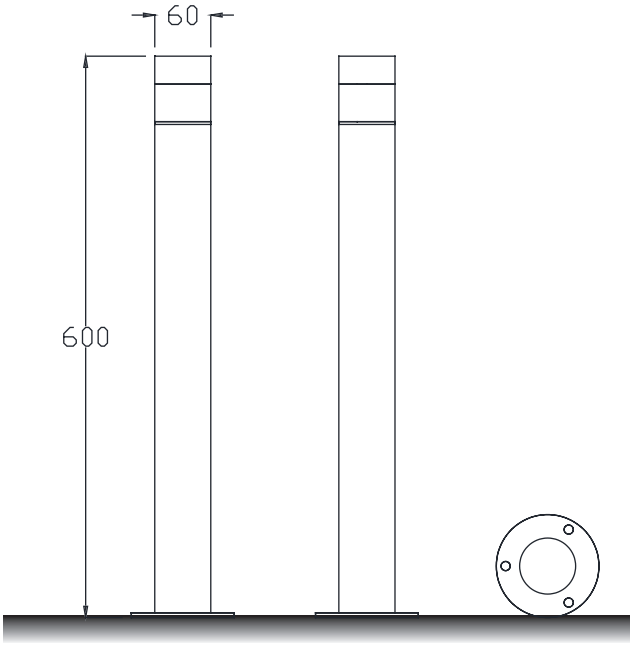

Installation plate

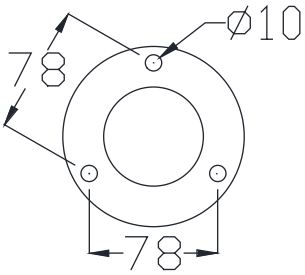

DM–CR120a

Colo(u)r temperature

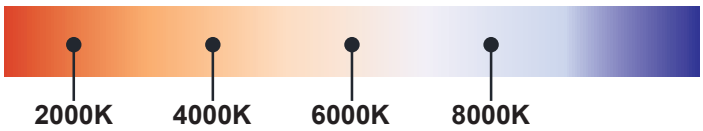

Bollard light

IP65

Rated power	12W	Power Factor	> 0.9
LED Quantity	12pcs	Life	> 50000H
Color Temperature	6000k/4000k/3000k	THD	< 15%
Luminous Flux	1100lm	Frequency Range	50/60HZ
Input Voltage	AC100~277V	Lnstallation Pipe Diameter	/
Protection Grade	IP65	CRI	> 90
Operating Temperature	-30~50℃		

DM-CR120a

Standard colours

9004 9006 9007 9016

Bollard light

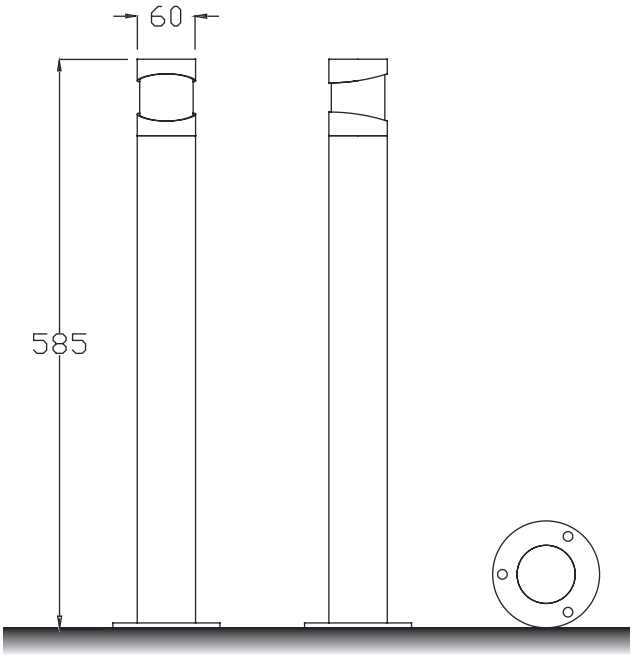

Installation plate

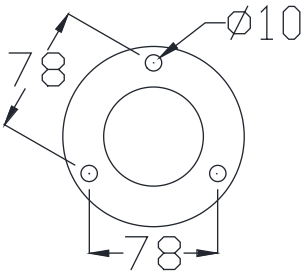

DM-CR121a

Colo(u)r temperature

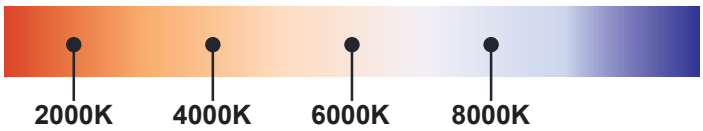

Bollard light

IP65

Rated power	12W	Power Factor	> 0.9
LED Quantity	12pcs	Life	> 50000H
Color Temperature	6000k/4000k/3000k	THD	< 15%
Luminous Flux	1100lm	Frequency Range	50/60HZ
Input Voltage	AC100~277V	Lnstallation Pipe Diameter	/
Protection Grade	IP65	CRI	> 90
Operating Temperature	-30~50℃		

DM-CR121a

Standard colours

9004 9006 9007 9016

Bollard light

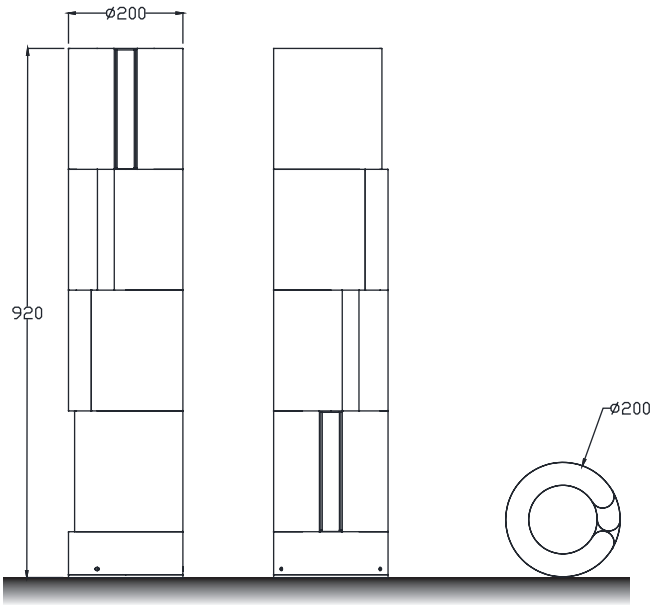

DM-CR122a

Installation plate

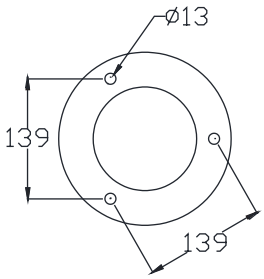

Colo(u)r temperature

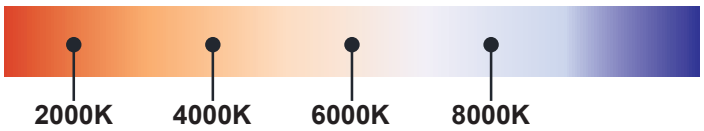

Bollard light

IP65

Rated power	12W	Power Factor	> 0.9
LED Quantity	12pcs	Life	> 50000H
Color Temperature	6000k/4000k/3000k	THD	< 15%
Luminous Flux	1100lm	Frequency Range	50/60HZ
Input Voltage	AC100~277V	Lnstallation Pipe Diameter	/
Protection Grade	IP65	CRI	> 90
Operating Temperature	-30~50℃		

DM-CR122a

Standard colours

9004 9006 9007 9016

Bollard light

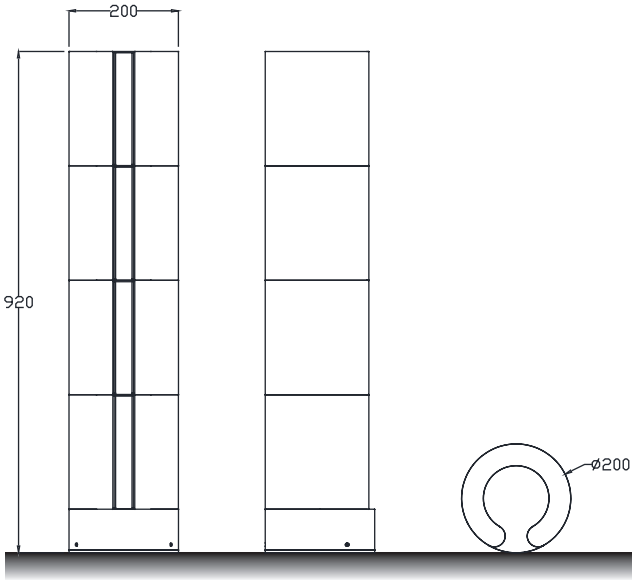

Installation plate

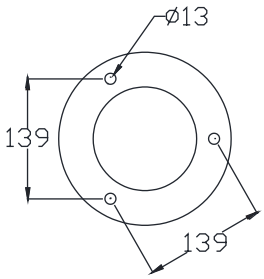

DM–CR123a

Colo(u)r temperature

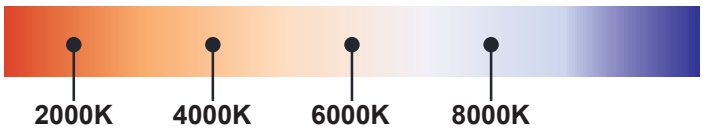

Bollard light

IP65

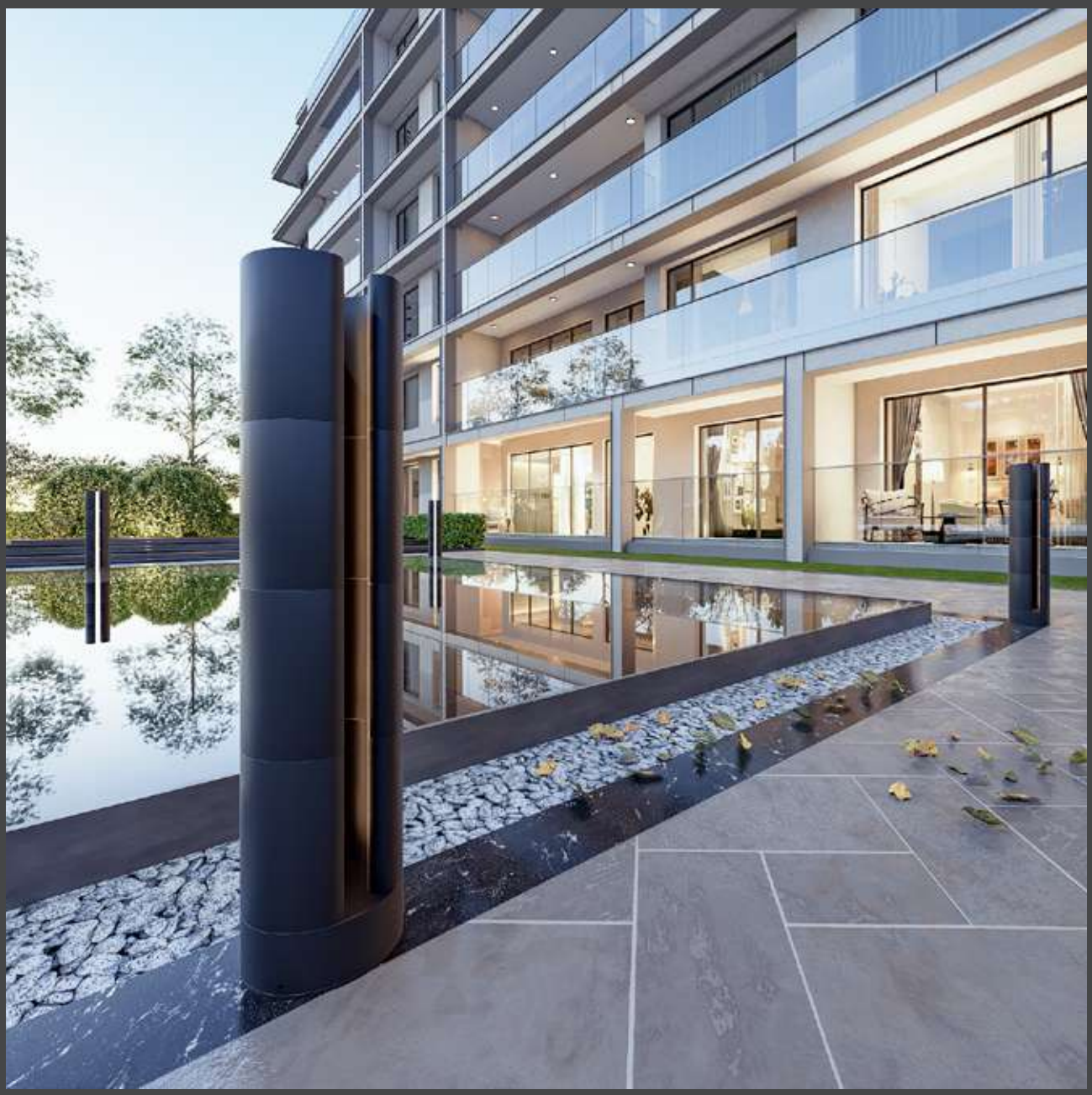

Rated power	12W	Power Factor	> 0.9
LED Quantity	12pcs	Life	> 50000H
Color Temperature	6000k/4000k/3000k	THD	< 15%
Luminous Flux	1100lm	Frequency Range	50/60HZ
Input Voltage	AC100~277V	Lnstallation Pipe Diameter	/
Protection Grade	IP65	CRI	> 90
Operating Temperature	-30~50℃		

DM-CR123a

Standard colours

9004 9006 9007 9016

Bollard light

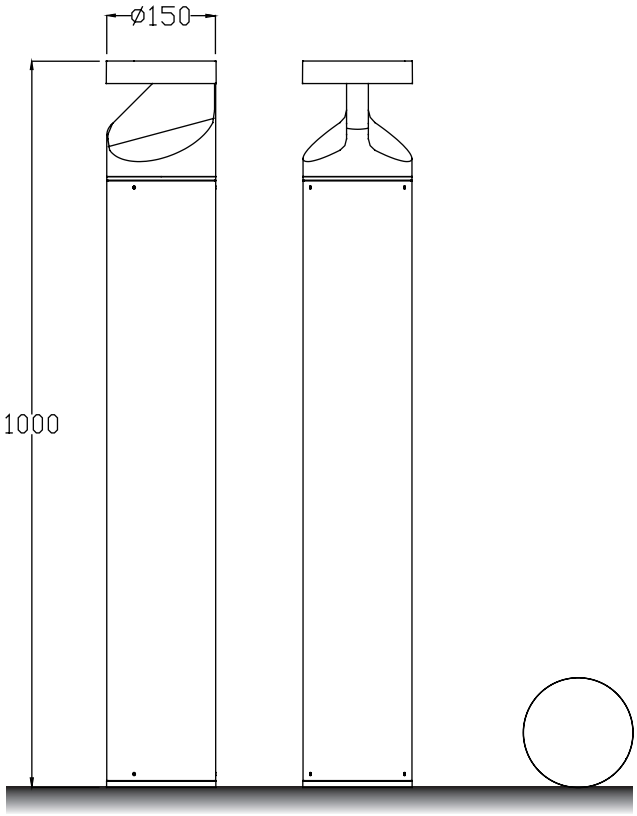

Installation plate

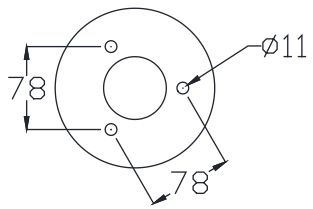

DM-CR124a

Colo(u)r temperature

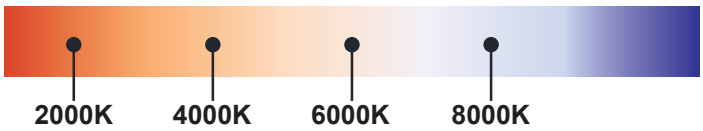

Bollard light

IP65

Rated power	12W	Power Factor	> 0.9
LED Quantity	12pcs	Life	> 50000H
Color Temperature	6000k/4000k/3000k	THD	< 15%
Luminous Flux	1100lm	Frequency Range	50/60HZ
Input Voltage	AC100~277V	Lnstallation Pipe Diameter	/
Protection Grade	IP65	CRI	> 90
Operating Temperature	-30~50℃		

DM-CR124a

Standard colours

9004 9006 9007 9016

Bollard light

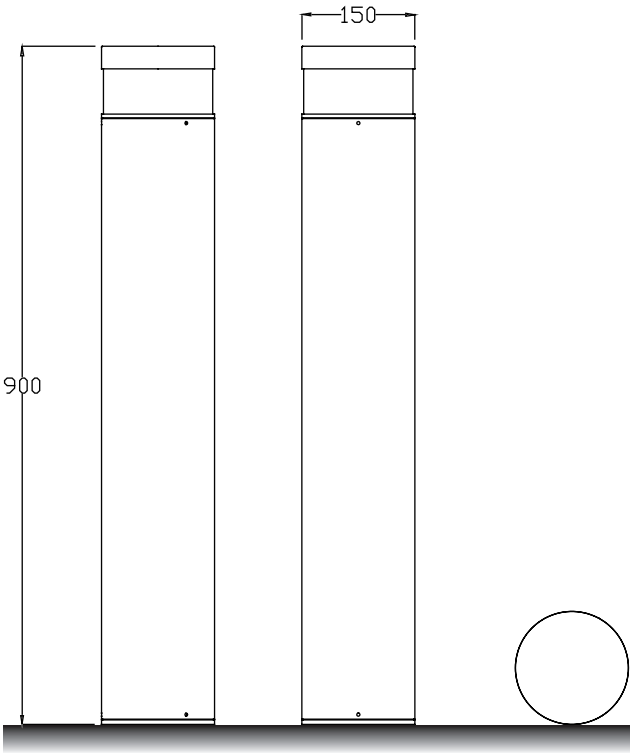

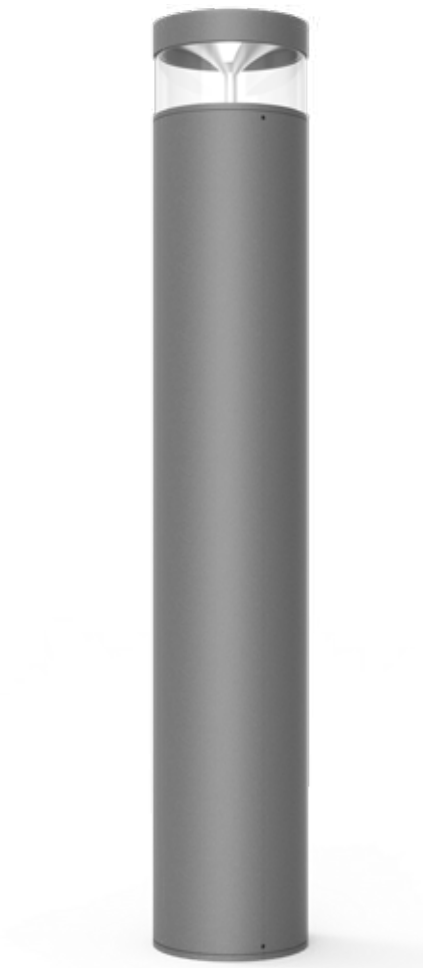

Installation plate

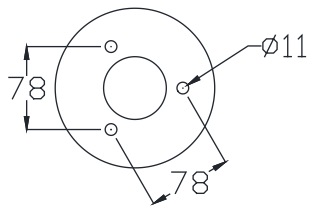

DM-CR125a

Colo(u)r temperature

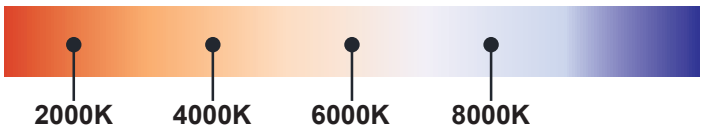

Bollard light

IP65

Rated power	12W	Power Factor	> 0.9
LED Quantity	12pcs	Life	> 50000H
Color Temperature	6000k/4000k/3000k	THD	< 15%
Luminous Flux	1100lm	Frequency Range	50/60HZ
Input Voltage	AC100~277V	Lnstallation Pipe Diameter	/
Protection Grade	IP65	CRI	> 90
Operating Temperature	-30~50℃		

DM-CR125a

Standard colours

9004 9006 9007 9016

Bollard light

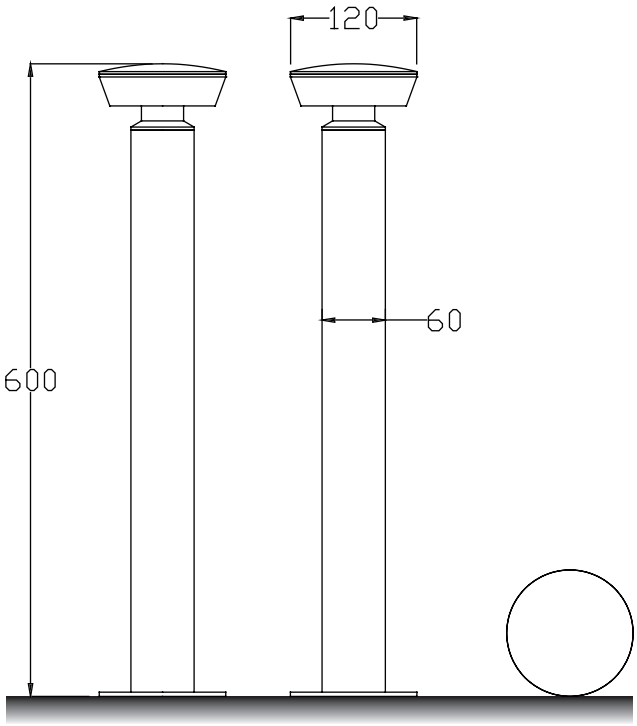

DM-CR126a

Installation plate

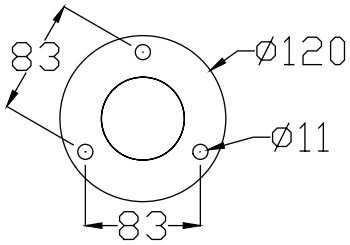

Colo(u)r temperature

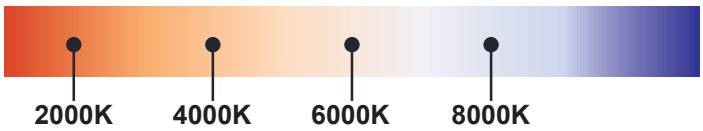

Bollard light

IP65

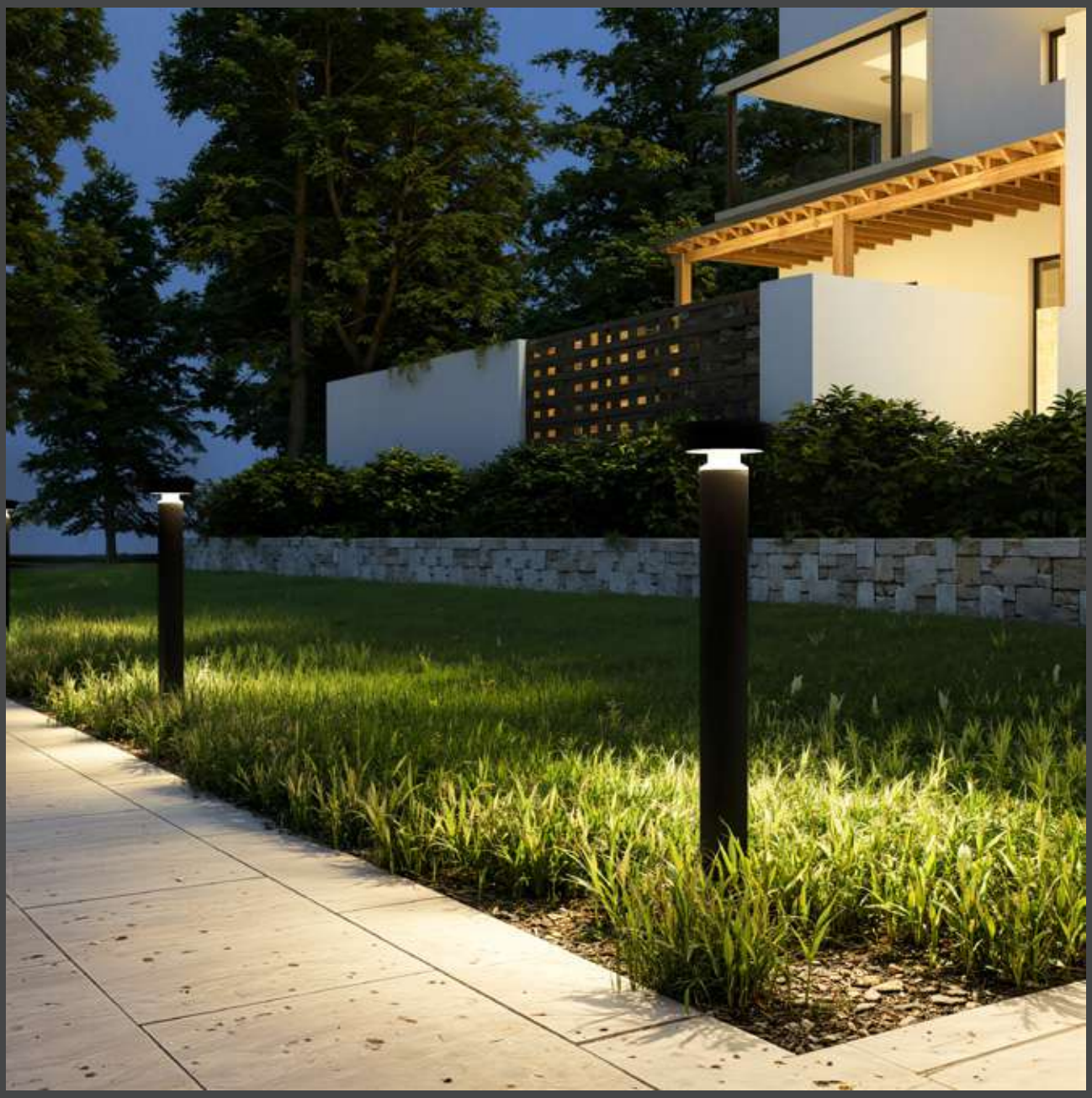

Rated power	12W	Power Factor	> 0.9
LED Quantity	12pcs	Life	> 50000H
Color Temperature	6000k/4000k/3000k	THD	< 15%
Luminous Flux	1100lm	Frequency Range	50/60HZ
Input Voltage	AC100~277V	Lnstallation Pipe Diameter	/
Protection Grade	IP65	CRI	> 90
Operating Temperature	-30~50℃		

DM-CR126a

Standard colours

9004 9006 9007 9016

Bollard light

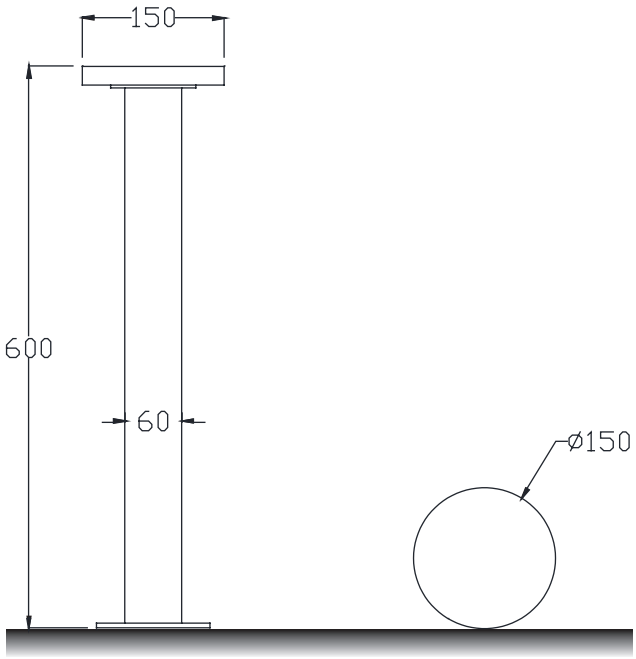

Installation plate

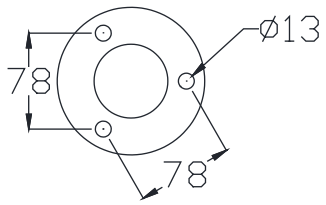

DM-BC1a

Colo(u)r temperature

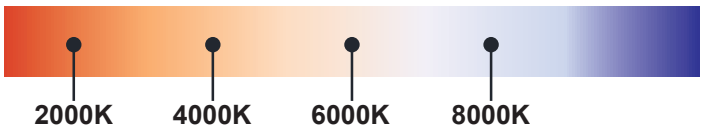

Bollard light

IP65

Rated power	12W	Power Factor	> 0.9
LED Quantity	1pcs	Life	> 50000H
Color Temperature	6000k/4000k/3000k	THD	< 15%
Luminous Flux	1100lm	Frequency Range	50/60HZ
Input Voltage	AC100~277V	Lnstallation Pipe Diameter	/
Protection Grade	IP65	CRI	> 90
Operating Temperature	-30~50℃		

DM-BC1a

Standard colours

9004 9006 9007 9016

Bollard light

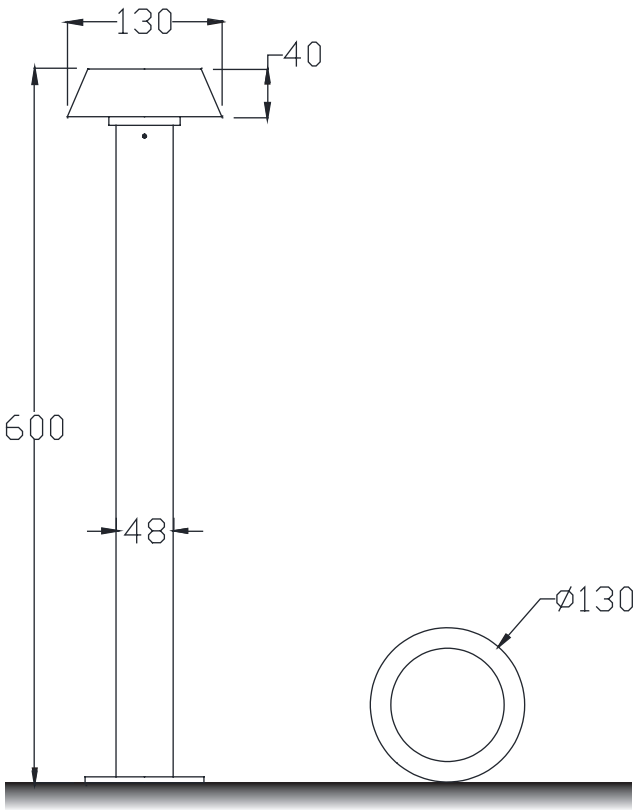

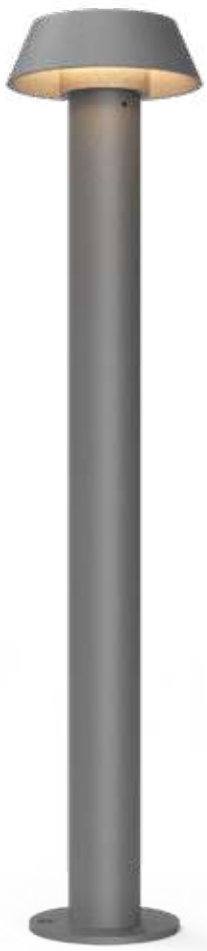

Installation plate

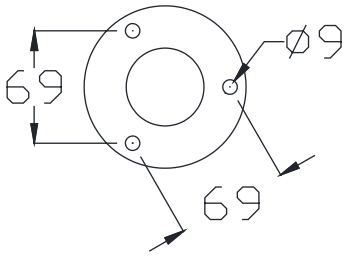

DM-BC2a

Colo(u)r temperature

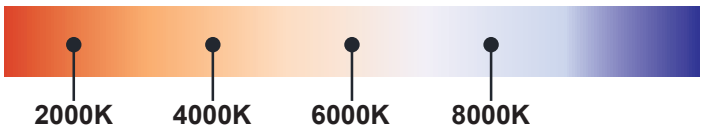

Bollard light

IP65

Rated power	12W	Power Factor	> 0.9
LED Quantity	1pcs	Life	> 50000H
Color Temperature	6000k/4000k/3000k	THD	< 15%
Luminous Flux	1100lm	Frequency Range	50/60HZ
Input Voltage	AC100~277V	Lnstallation Pipe Diameter	/
Protection Grade	IP65	CRI	> 90
Operating Temperature	-30~50℃		

DM-BC2a

Standard colours

9004 9006 9007 9016

Bollard light

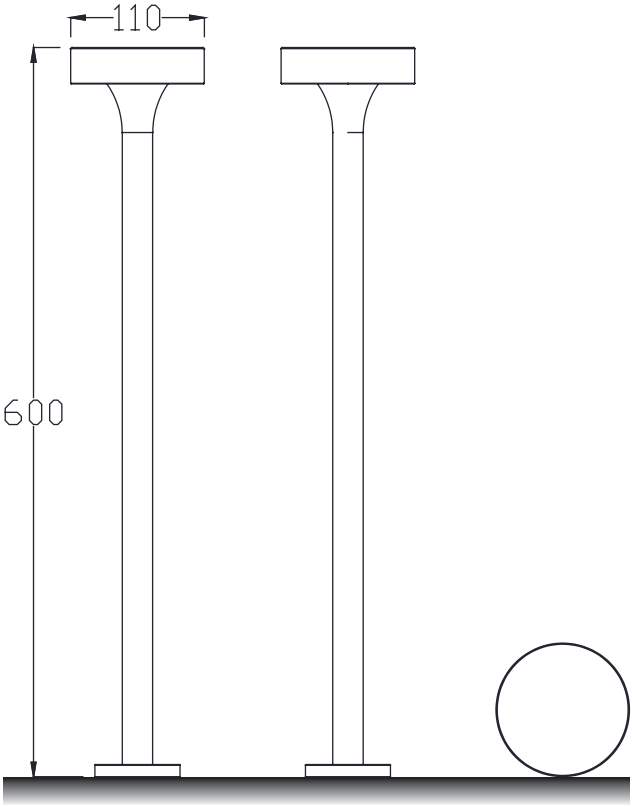

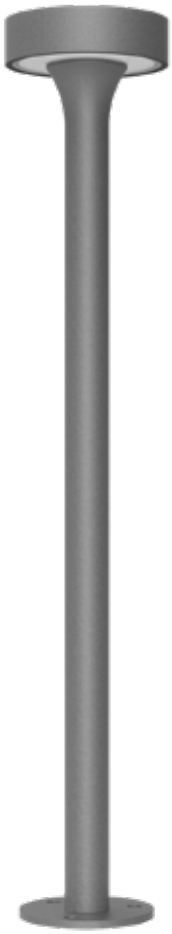

Installation plate

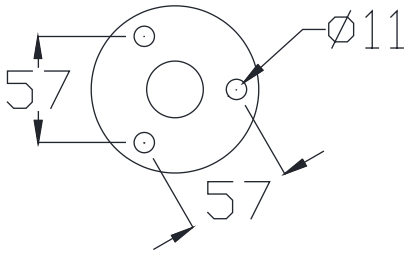

DM-BC3a

Colo(u)r temperature

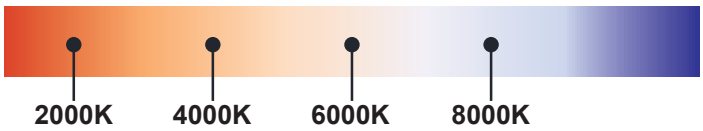

Bollard light

IP65

Rated power	12W	Power Factor	> 0.9
LED Quantity	1pcs	Life	> 50000H
Color Temperature	6000k/4000k/3000k	THD	< 15%
Luminous Flux	1100lm	Frequency Range	50/60HZ
Input Voltage	AC100~277V	Lnstallation Pipe Diameter	/
Protection Grade	IP65	CRI	> 90
Operating Temperature	-30~50℃		

DM-BC3a

Standard colours

9004 9006 9007 9016

Bollard light

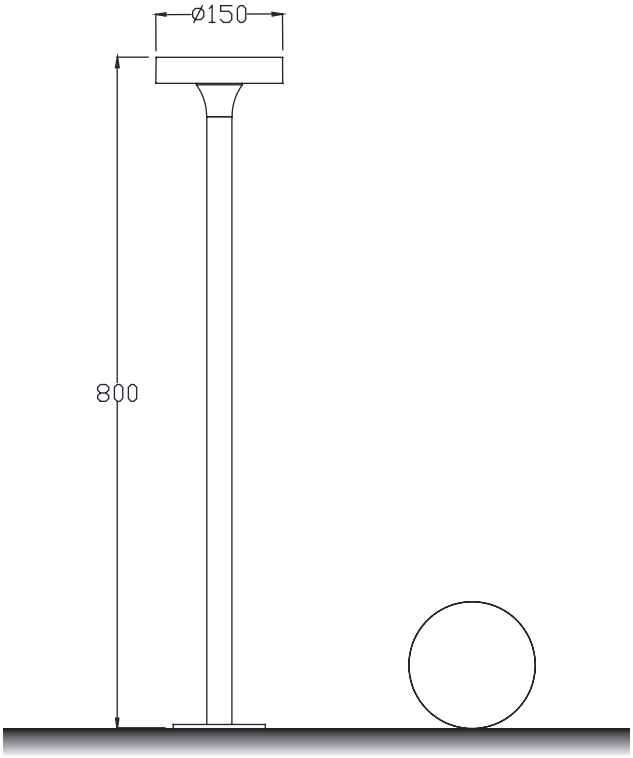

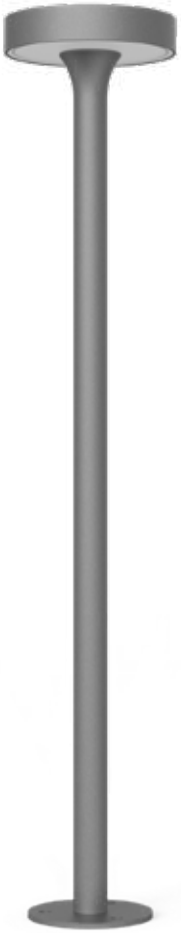

Installation plate

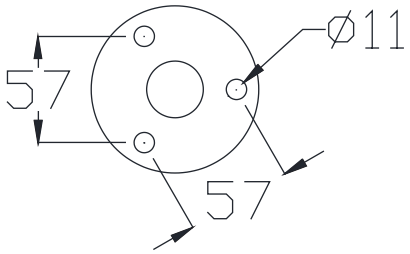

DM-BC3b

Colo(u)r temperature

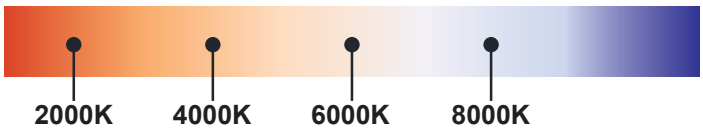

Bollard light

IP65

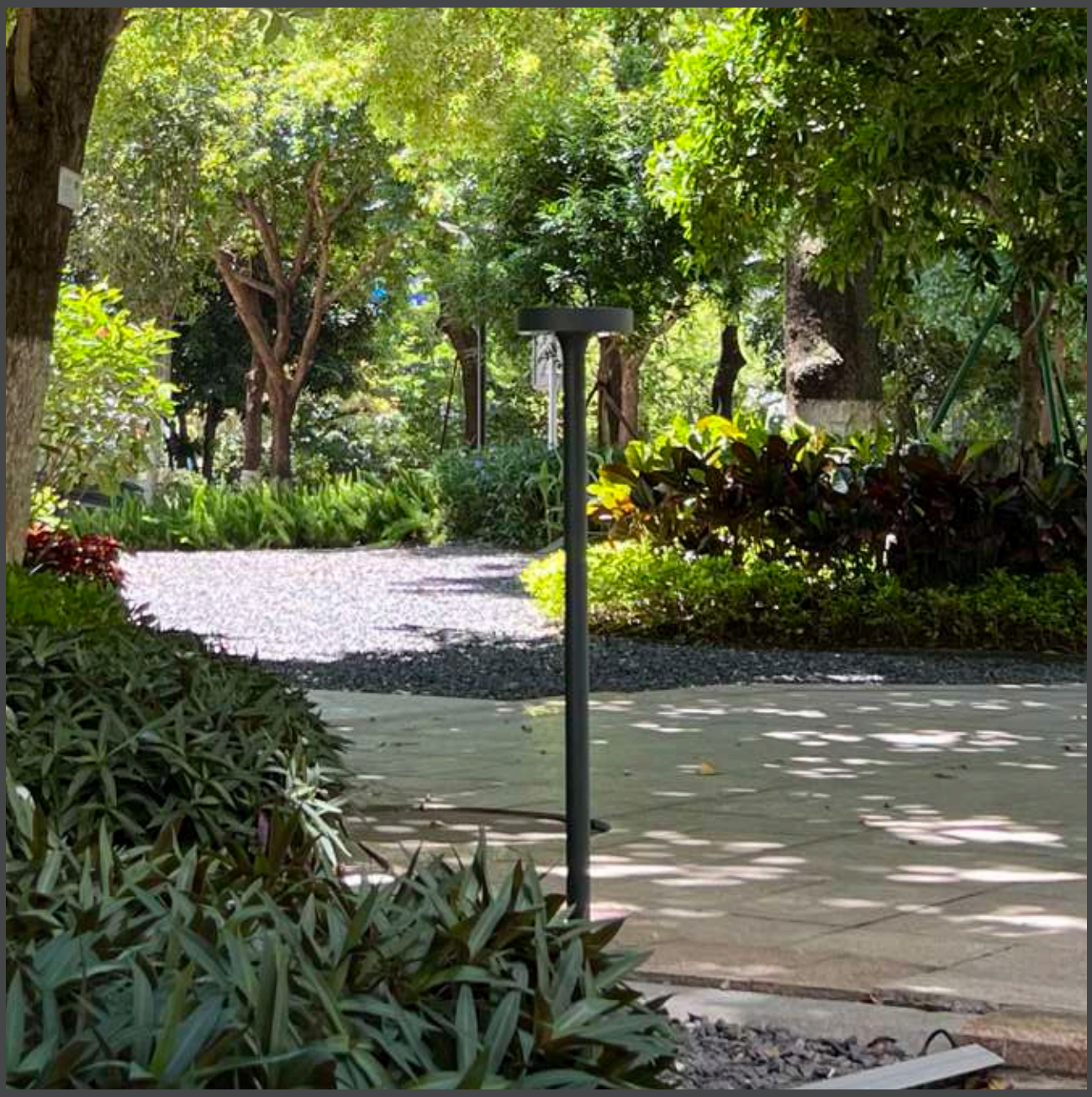

Rated power	12W	Power Factor	> 0.9
LED Quantity	1pcs	Life	> 50000H
Color Temperature	6000k/4000k/3000k	THD	< 15%
Luminous Flux	1100lm	Frequency Range	50/60HZ
Input Voltage	AC100~277V	Lnstallation Pipe Diameter	/
Protection Grade	IP65	CRI	> 90
Operating Temperature	-30~50℃		

DM-BC3b

Standard colours

9004 9006 9007 9016

Bollard light

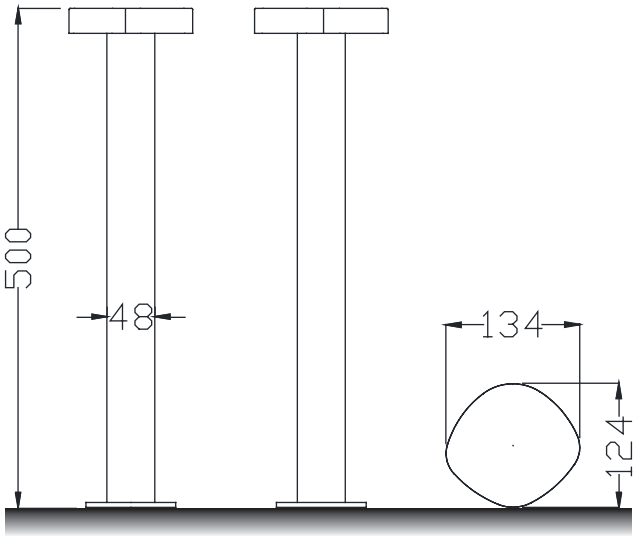

Installation plate

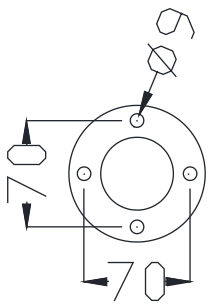

DM-BC4a

Colo(u)r temperature

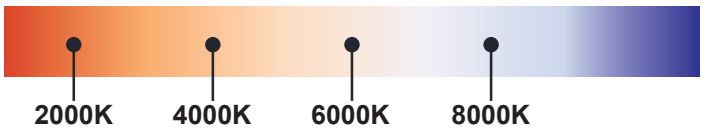

Bollard light

IP65

Rated power	12W	Power Factor	> 0.9
LED Quantity	1pcs	Life	> 50000H
Color Temperature	6000k/4000k/3000k	THD	< 15%
Luminous Flux	1100lm	Frequency Range	50/60HZ
Input Voltage	AC100~277V	Lnstallation Pipe Diameter	/
Protection Grade	IP65	CRI	> 90
Operating Temperature	-30~50℃		

DM-BC4a

Standard colours

9004 9006 9007 9016

Bollard light

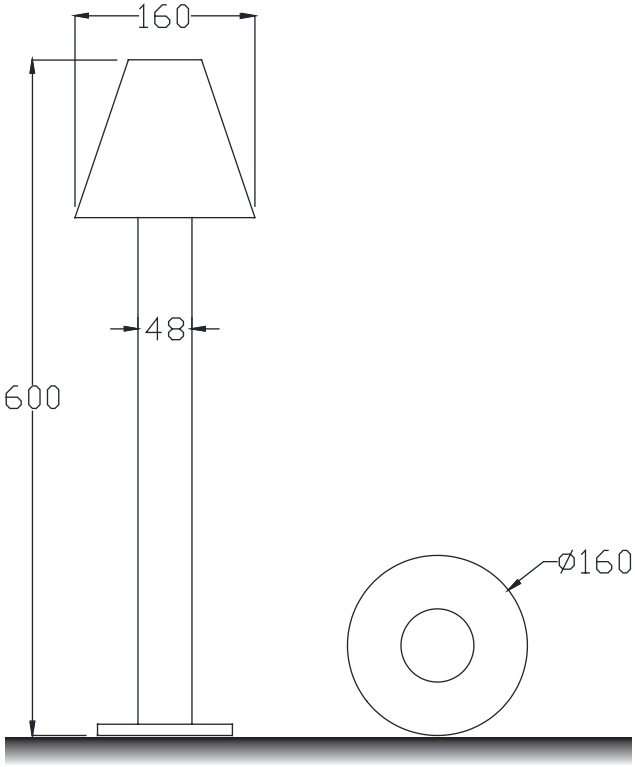

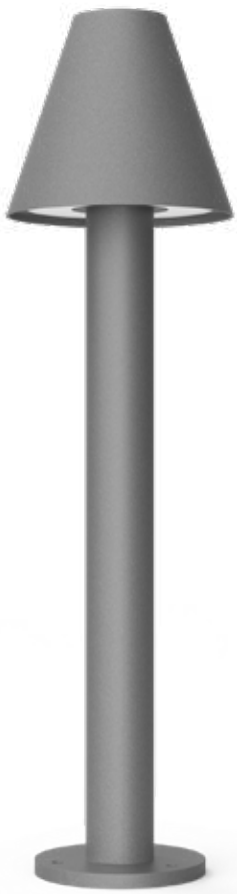

Installation plate

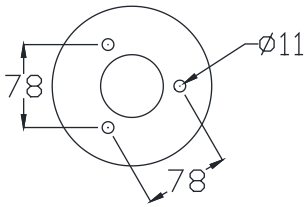

DM-BC5a

Colo(u)r temperature

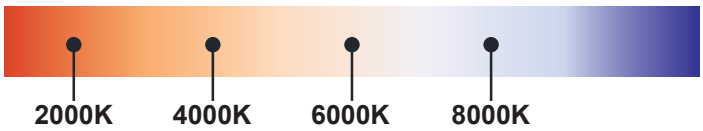

Bollard light

IP65

Rated power	12W	Power Factor	> 0.9
LED Quantity	1pcs	Life	> 50000H
Color Temperature	6000k/4000k/3000k	THD	< 15%
Luminous Flux	1100lm	Frequency Range	50/60HZ
Input Voltage	AC100~277V	Lnstallation Pipe Diameter	/
Protection Grade	IP65	CRI	> 90
Operating Temperature	-30~50℃		

DM-BC5a

Standard colours

9004 9006 9007 9016

Bollard light

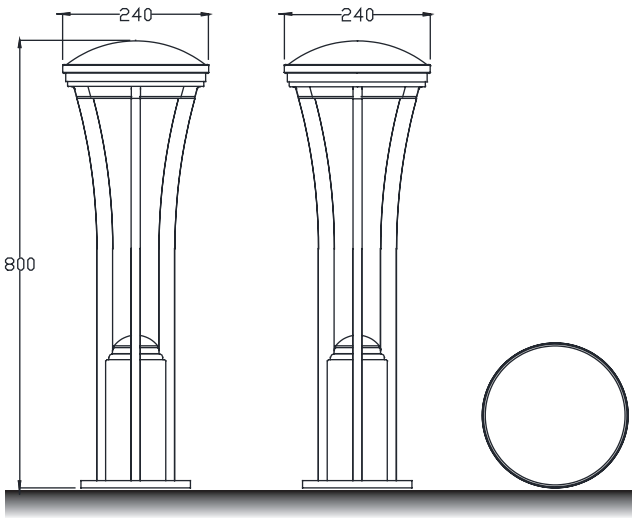

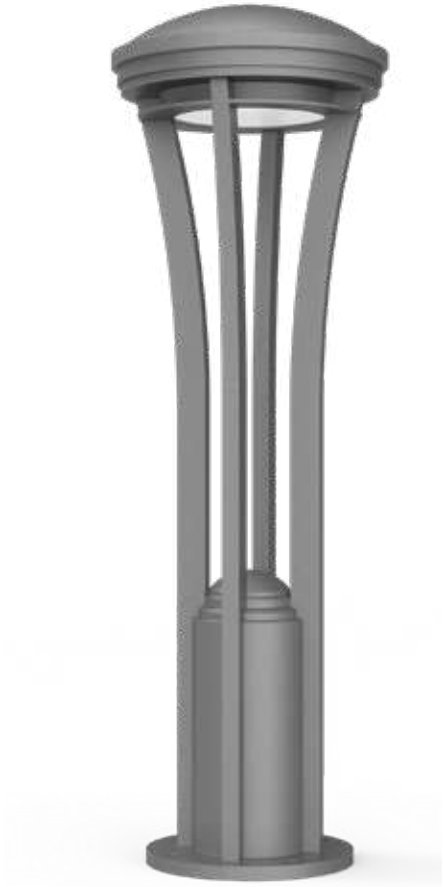

Installation plate

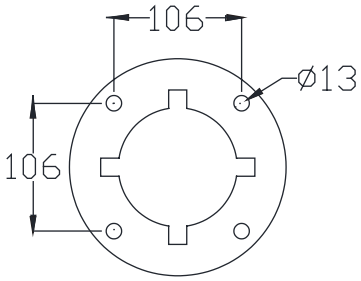

DM-BC6a

Colo(u)r temperature

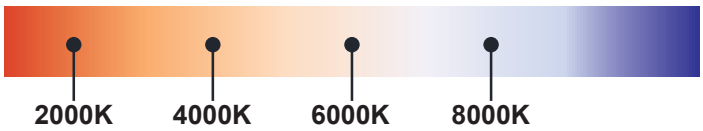

Bollard light

IP65

Rated power	12W	Power Factor	> 0.9
LED Quantity	1pcs	Life	> 50000H
Color Temperature	6000k/4000k/3000k	THD	< 15%
Luminous Flux	1100lm	Frequency Range	50/60HZ
Input Voltage	AC100~277V	Lnstallation Pipe Diameter	/
Protection Grade	IP65	CRI	> 90
Operating Temperature	-30~50℃		

DM-BC6a

Standard colours

9004 9006 9007 9016

Bollard light

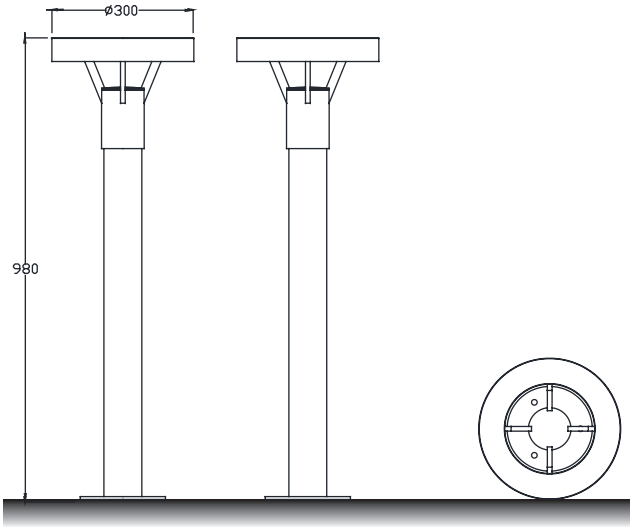

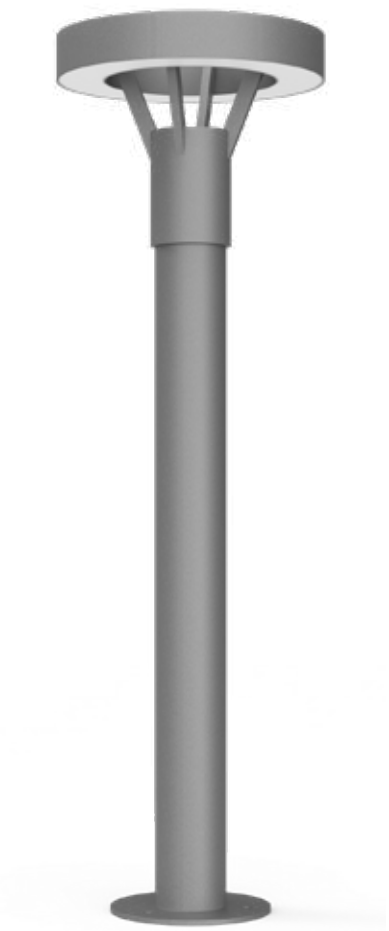

Installation plate

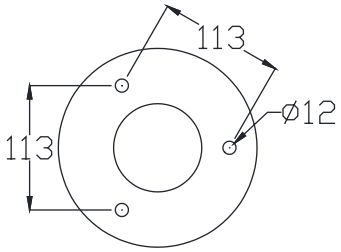

DM-BC7a

Colo(u)r temperature

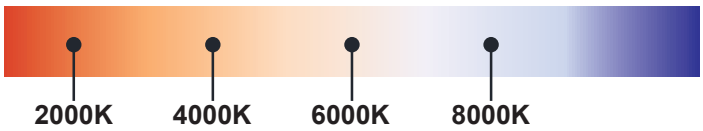

Bollard light

IP65

Rated power	12W	Power Factor	> 0.9
LED Quantity	1pcs	Life	> 50000H
Color Temperature	6000k/4000k/3000k	THD	< 15%
Luminous Flux	1100lm	Frequency Range	50/60HZ
Input Voltage	AC100~277V	Lnstallation Pipe Diameter	/
Protection Grade	IP65	CRI	> 90
Operating Temperature	-30~50℃		

DM-BC7a

Standard colours

9004 9006 9007 9016

Bollard light

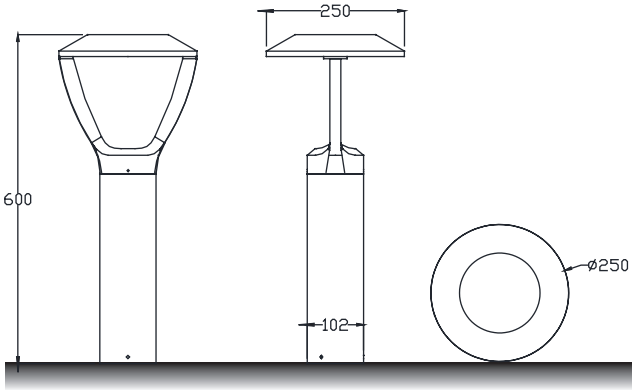

Installation plate

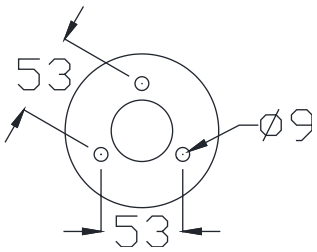

DM-BC8a

Colo(u)r temperature

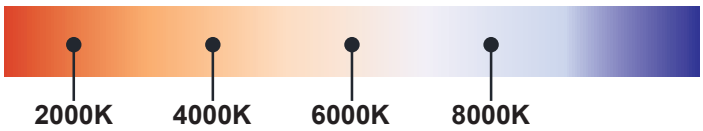

Bollard light

IP65

Rated power	12W	Power Factor	> 0.9
LED Quantity	1pcs	Life	> 50000H
Color Temperature	6000k/4000k/3000k	THD	< 15%
Luminous Flux	1100lm	Frequency Range	50/60HZ
Input Voltage	AC100~277V	Lnstallation Pipe Diameter	/
Protection Grade	IP65	CRI	> 90
Operating Temperature	-30~50℃		

DM-BC8a

Standard colours

9004 9006 9007 9016

Bollard light

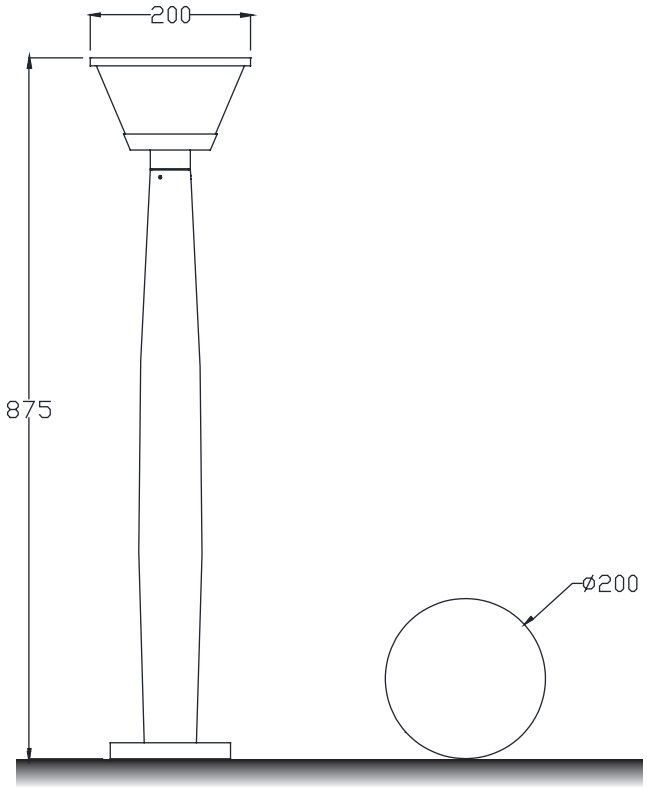

Installation plate

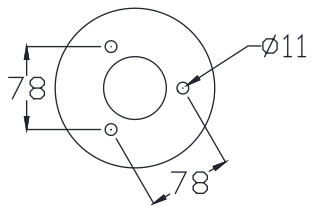

DM-BC9a

Colo(u)r temperature

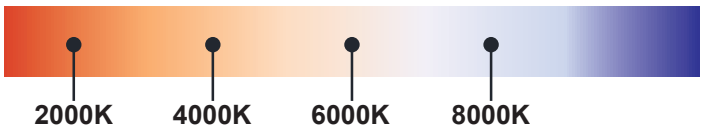

Bollard light

IP65

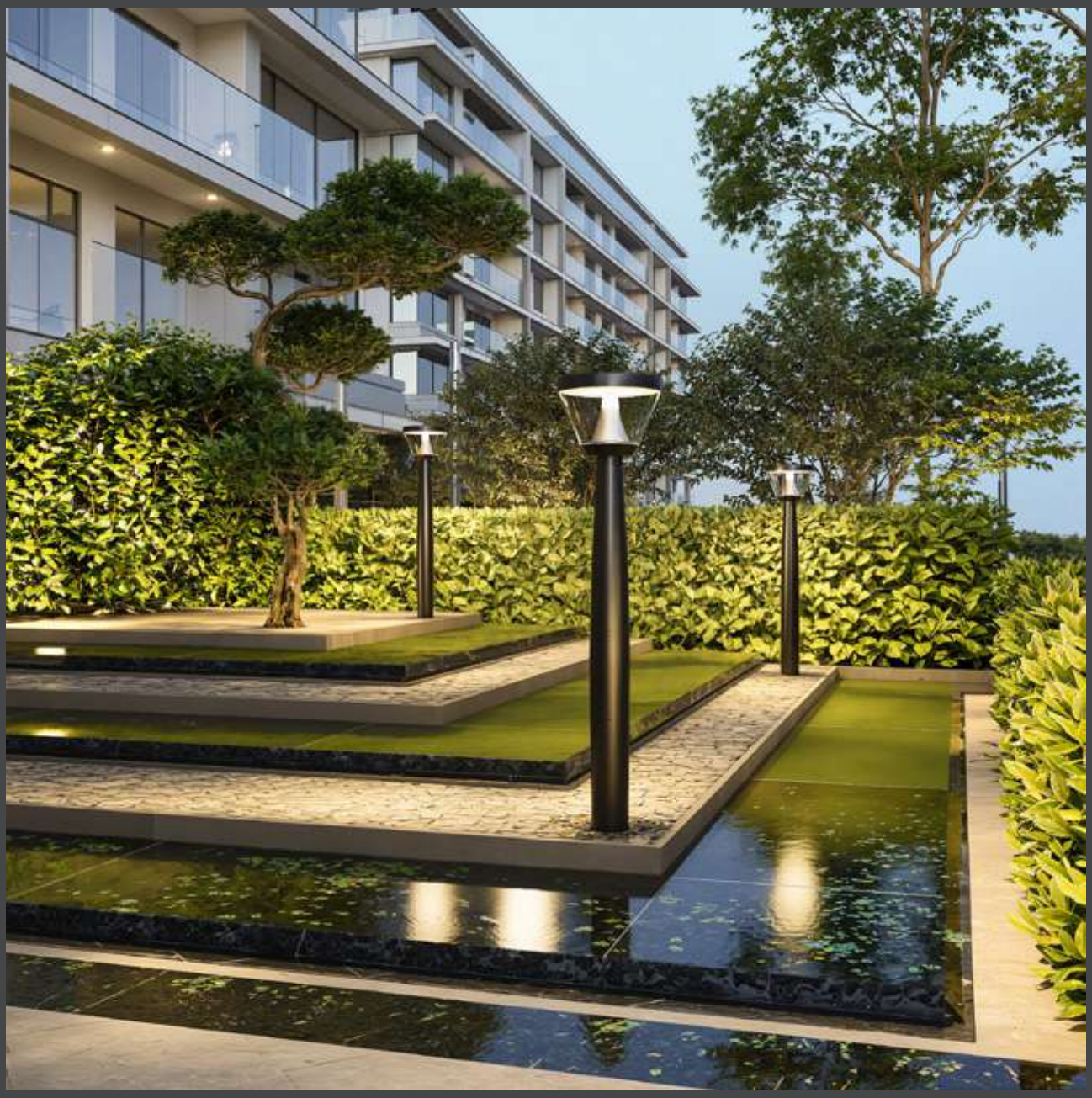

Rated power	12W	Power Factor	> 0.9
LED Quantity	1pcs	Life	> 50000H
Color Temperature	6000k/4000k/3000k	THD	< 15%
Luminous Flux	1100lm	Frequency Range	50/60HZ
Input Voltage	AC100~277V	Lnstallation Pipe Diameter	/
Protection Grade	IP65	CRI	> 90
Operating Temperature	-30~50℃		

DM-BC9a

Standard colours

9004 9006 9007 9016

Bollard light

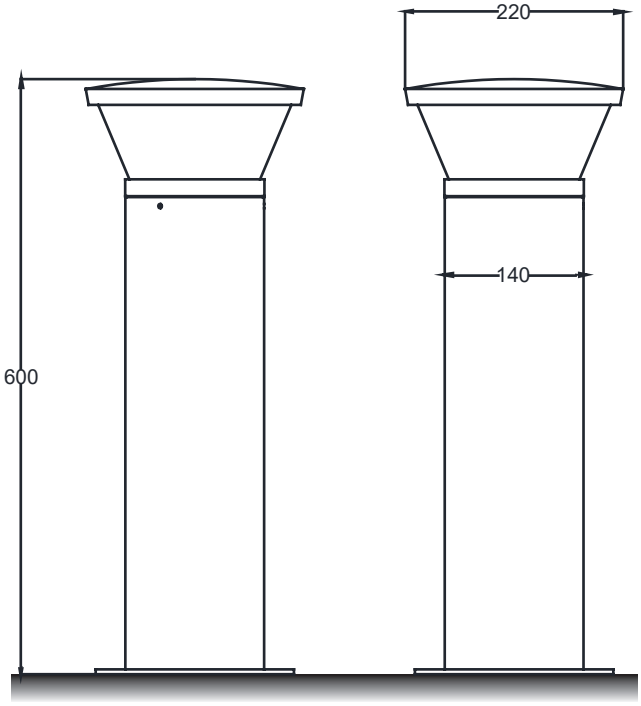

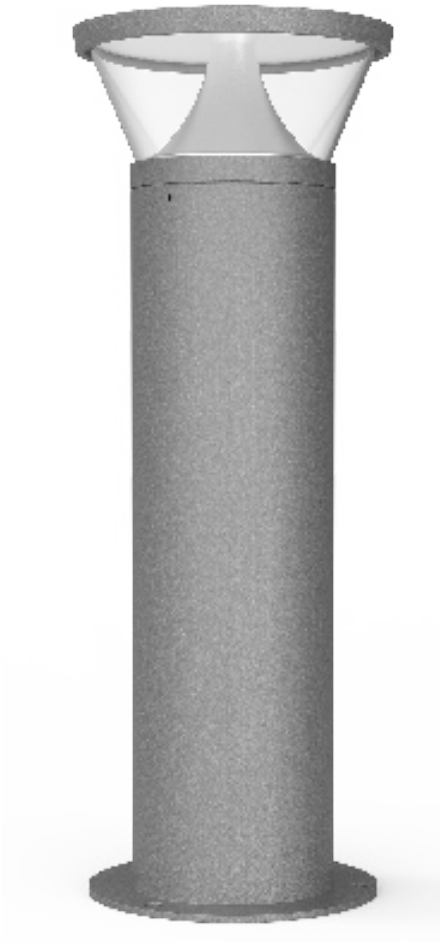

Installation plate

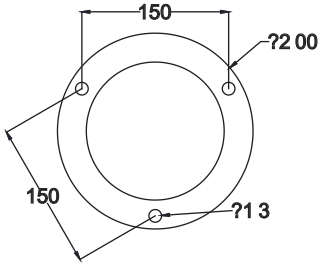

DM–BC10a

Colo(u)r temperature

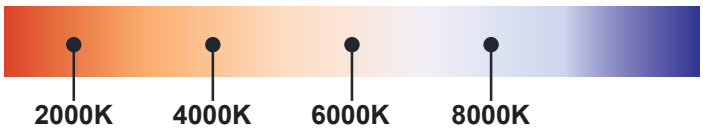

Bollard light

IP65

Rated power	12W	Power Factor	> 0.9
LED Quantity	1pcs	Life	> 50000H
Color Temperature	6000k/4000k/3000k	THD	< 15%
Luminous Flux	1100lm	Frequency Range	50/60HZ
Input Voltage	AC100~277V	Lnstallation Pipe Diameter	/
Protection Grade	IP65	CRI	> 90
Operating Temperature	-30~50℃		

DM-BC10a

Standard colours

9004 9006 9007 9016

Bollard light

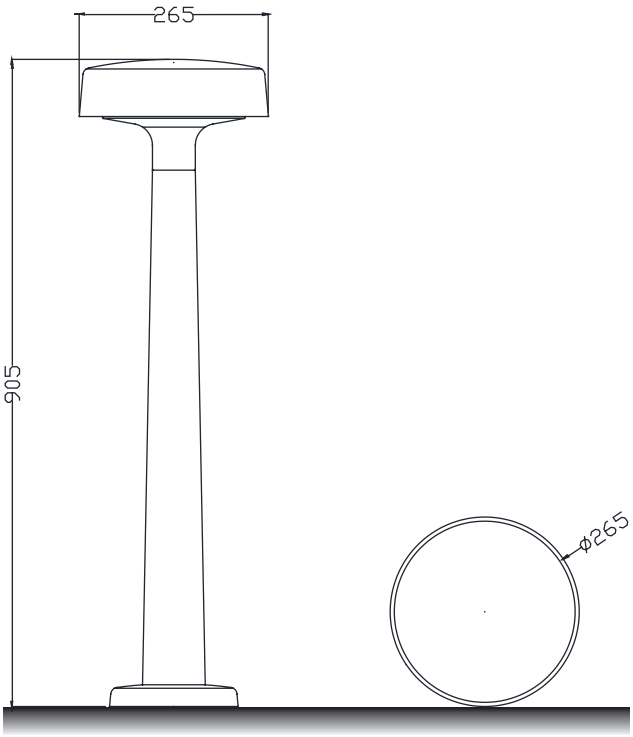

Installation plate

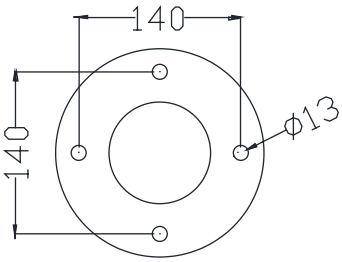

DM-BC11a

Colo(u)r temperature

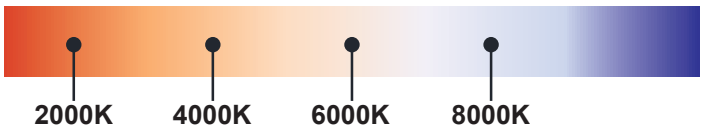

Bollard light

IP65

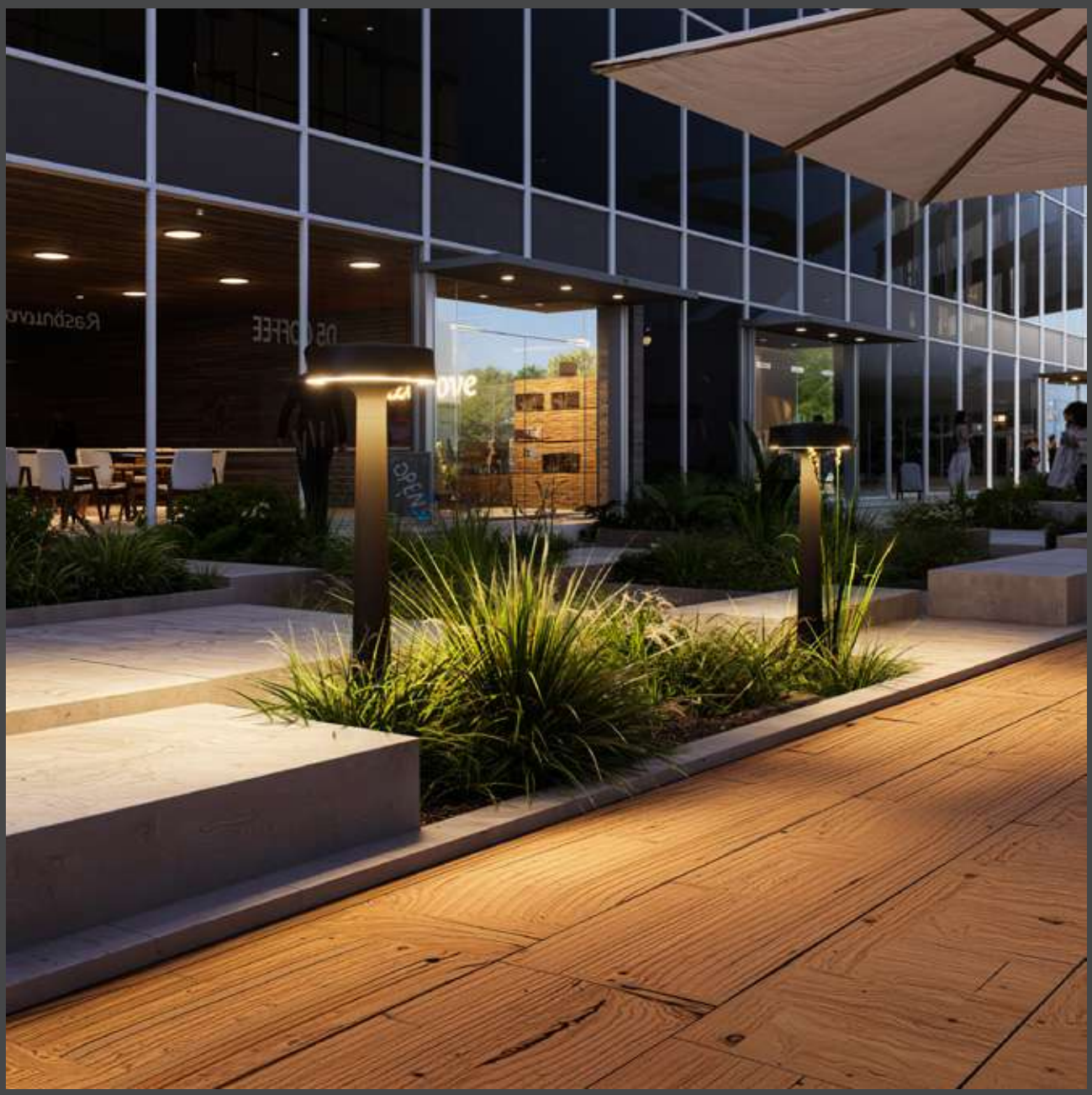

Rated power	12W	Power Factor	> 0.9
LED Quantity	1pcs	Life	> 50000H
Color Temperature	6000k/4000k/3000k	THD	< 15%
Luminous Flux	1100lm	Frequency Range	50/60HZ
Input Voltage	AC100~277V	Lnstallation Pipe Diameter	/
Protection Grade	IP65	CRI	> 90
Operating Temperature	-30~50℃		

DM-BC11a

Standard colours

9004 9006 9007 9016

Bollard light

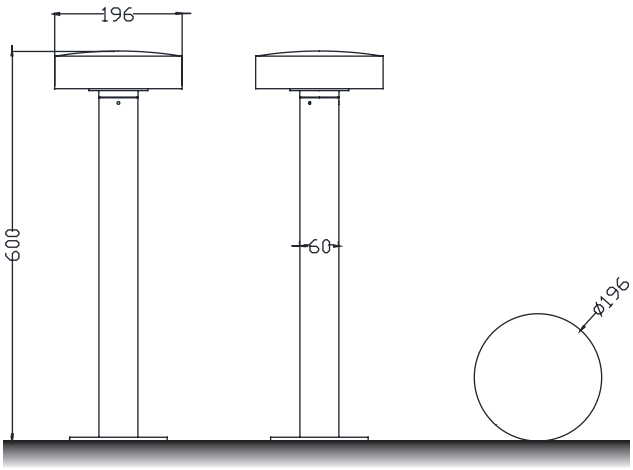

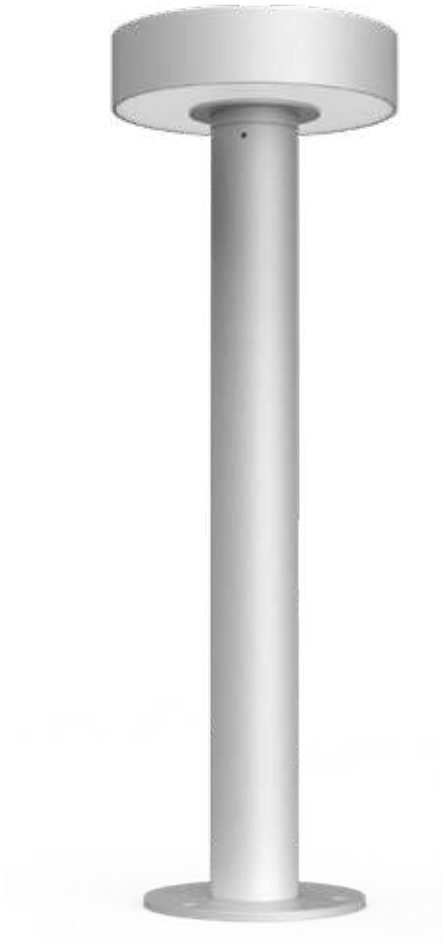

Installation plate

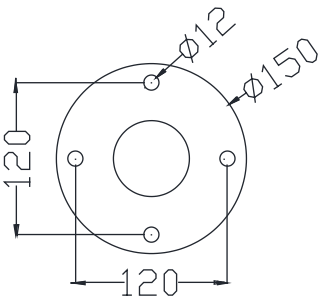

DM-BC12a

Colo(u)r temperature

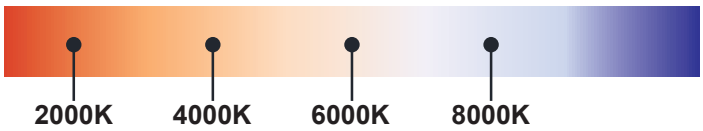

Bollard light

IP65

Rated power	12W	Power Factor	> 0.9
LED Quantity	1pcs	Life	> 50000H
Color Temperature	6000k/4000k/3000k	THD	< 15%
Luminous Flux	1100lm	Frequency Range	50/60HZ
Input Voltage	AC100~277V	Lnstallation Pipe Diameter	/
Protection Grade	IP65	CRI	> 90
Operating Temperature	-30~50℃		

DM-BC12a

Standard colours

9004 9006 9007 9016

Bollard light

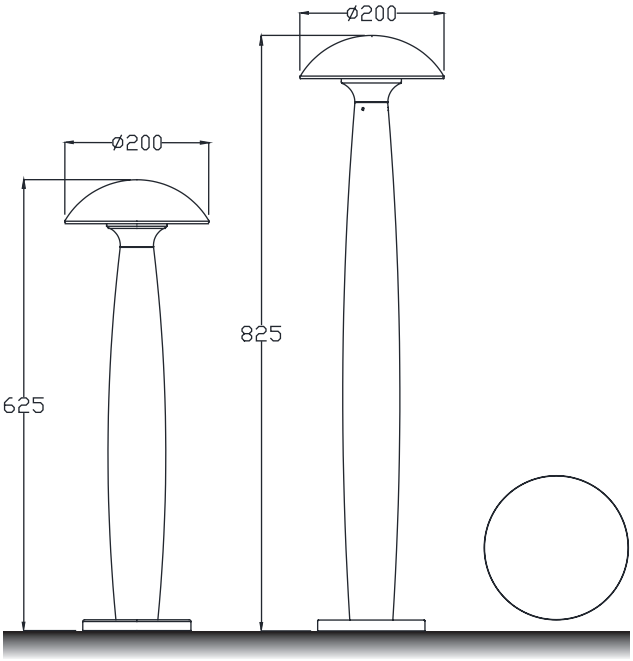

Installation plate

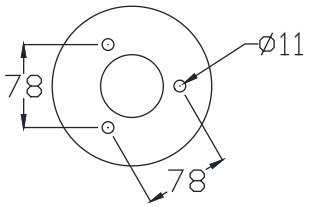

DM-BC13a

Colo(u)r temperature

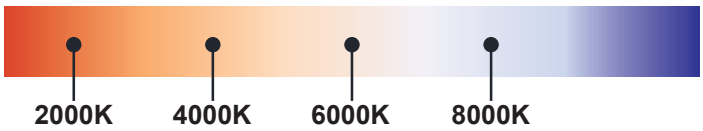

Bollard light

IP65

Rated power	12W	Power Factor	> 0.9
LED Quantity	1pcs	Life	> 50000H
Color Temperature	6000k/4000k/3000k	THD	< 15%
Luminous Flux	1100lm	Frequency Range	50/60HZ
Input Voltage	AC100~277V	Lnstallation Pipe Diameter	/
Protection Grade	IP65	CRI	> 90
Operating Temperature	-30~50℃		

DM-BC13a

Standard colours

9004 9006 9007 9016

Bollard light

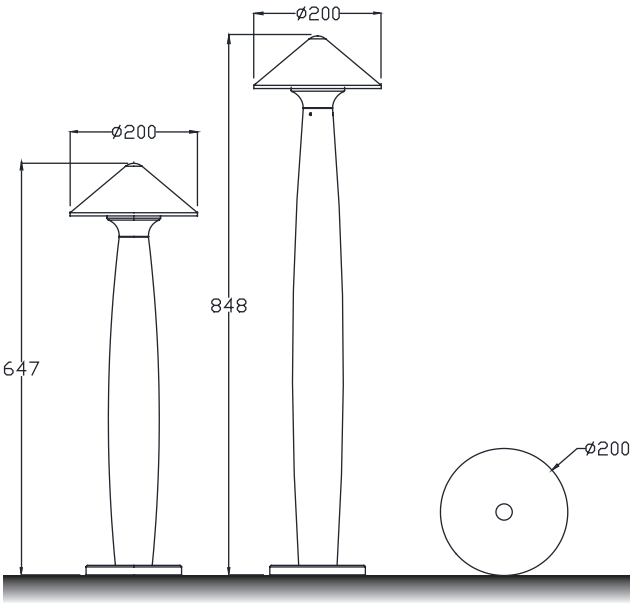

Installation plate

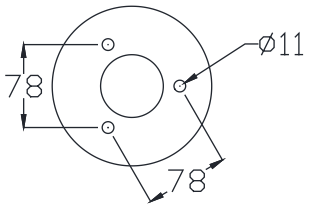

DM-BC14a

Colo(u)r temperature

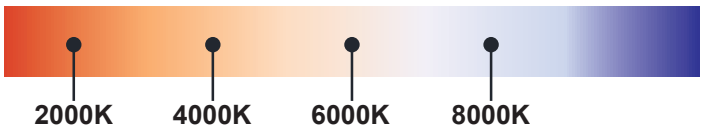

Bollard light

IP65

Rated power	12W	Power Factor	> 0.9
LED Quantity	1pcs	Life	> 50000H
Color Temperature	6000k/4000k/3000k	THD	< 15%
Luminous Flux	1100lm	Frequency Range	50/60HZ
Input Voltage	AC100~277V	Lnstallation Pipe Diameter	/
Protection Grade	IP65	CRI	> 90
Operating Temperature	-30~50℃		

DM-BC14a

Standard colours

9004 9006 9007 9016

Bollard light

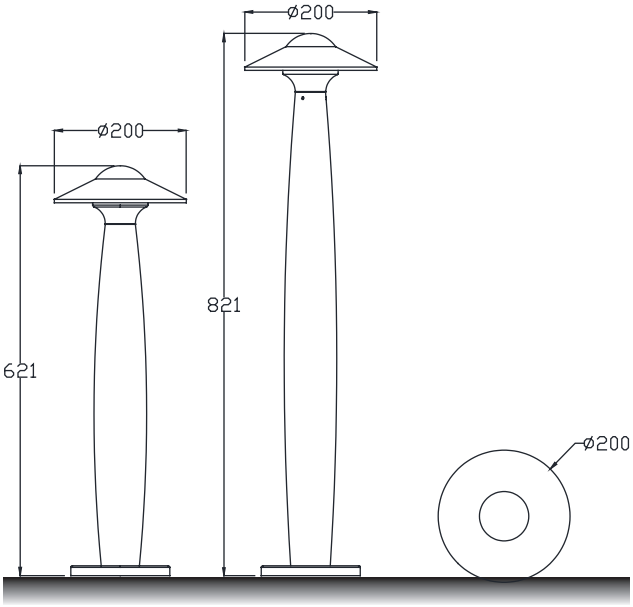

Installation plate

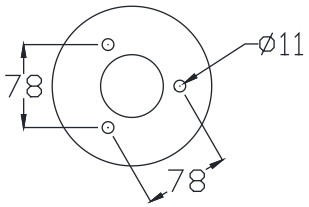

DM-BC15a

Colo(u)r temperature

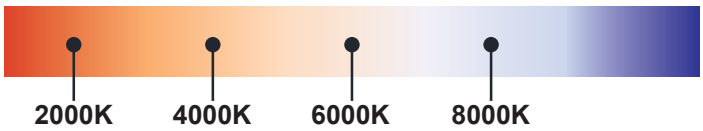

Bollard light

IP65

Rated power	12W	Power Factor	> 0.9
LED Quantity	1pcs	Life	> 50000H
Color Temperature	6000k/4000k/3000k	THD	< 15%
Luminous Flux	1100lm	Frequency Range	50/60HZ
Input Voltage	AC100~277V	Lnstallation Pipe Diameter	/
Protection Grade	IP65	CRI	> 90
Operating Temperature	-30~50℃		

DM-BC1a

Standard colours

9004 9006 9007 9016

Bollard light

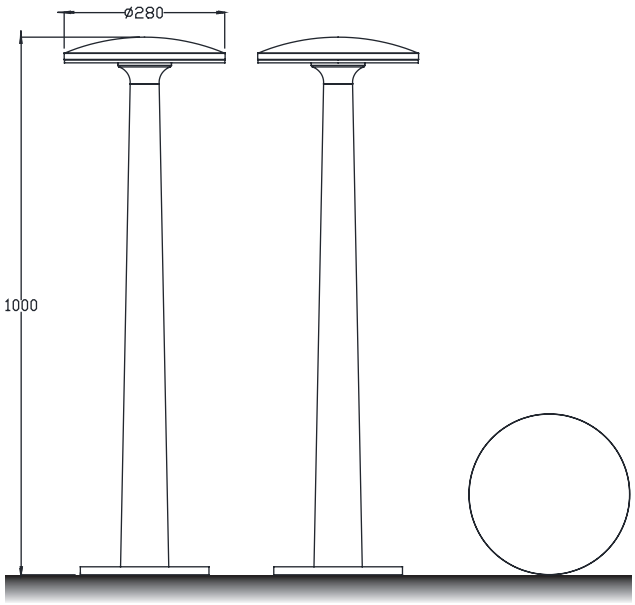

Installation plate

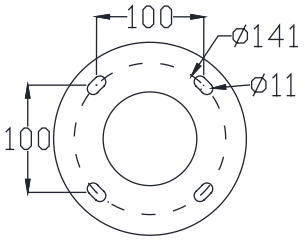

DM-BC16a

Colo(u)r temperature

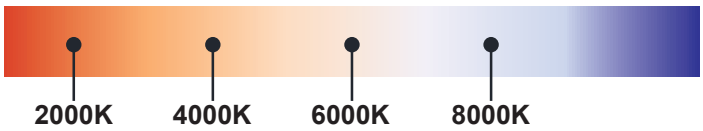

Bollard light

IP65

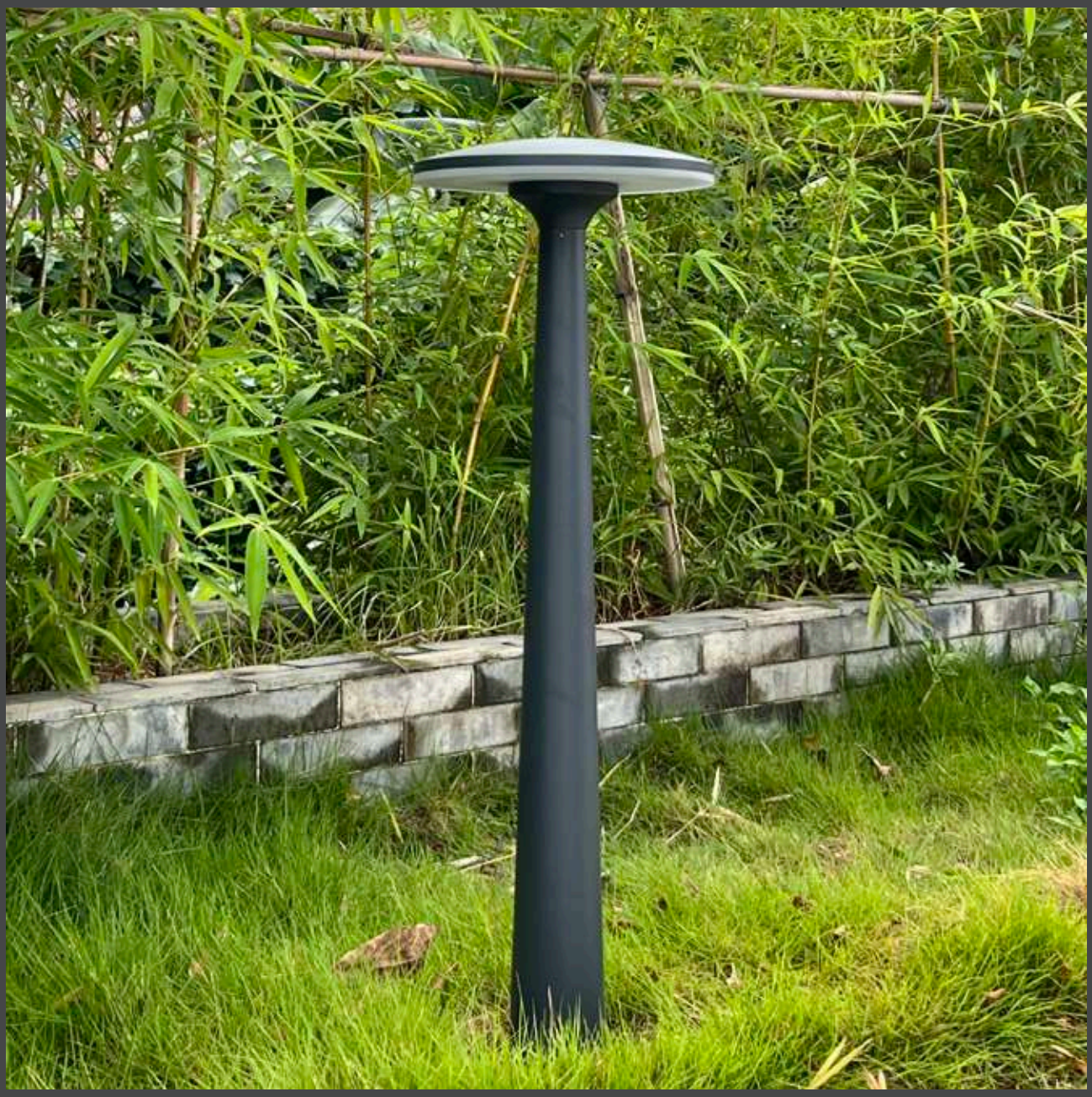

Rated power	12W	Power Factor	> 0.9
LED Quantity	1pcs	Life	> 50000H
Color Temperature	6000k/4000k/3000k	THD	< 15%
Luminous Flux	1100lm	Frequency Range	50/60HZ
Input Voltage	AC100~277V	Lnstallation Pipe Diameter	/
Protection Grade	IP65	CRI	> 90
Operating Temperature	-30~50℃		

DM-BC16a

Standard colours

9004 9006 9007 9016

Bollard light

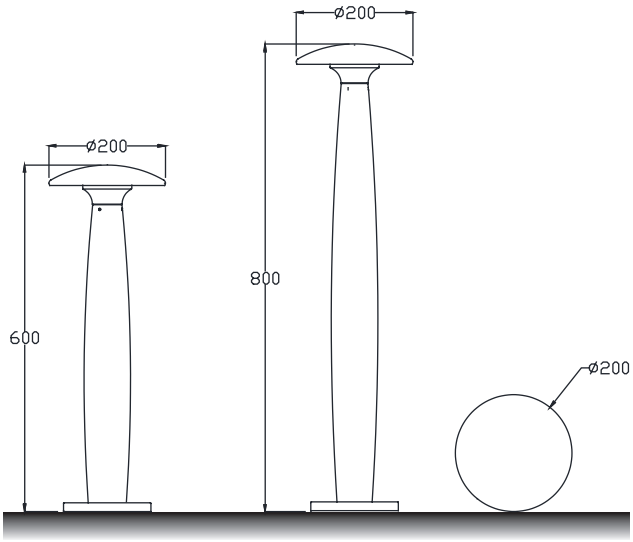

Installation plate

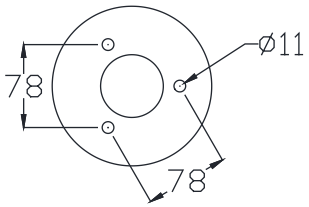

DM-BC17a

Colo(u)r temperature

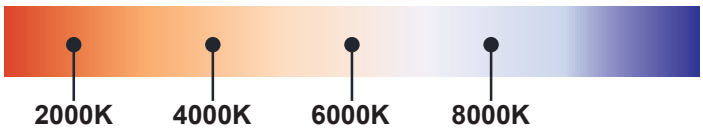

Bollard light

IP65

Rated power	12W	Power Factor	> 0.9
LED Quantity	1pcs	Life	> 50000H
Color Temperature	6000k/4000k/3000k	THD	< 15%
Luminous Flux	1100lm	Frequency Range	50/60HZ
Input Voltage	AC100~277V	Lnstallation Pipe Diameter	/
Protection Grade	IP65	CRI	> 90
Operating Temperature	-30~50℃		

DM-BC17a

Standard colours

9004 9006 9007 9016

Bollard light

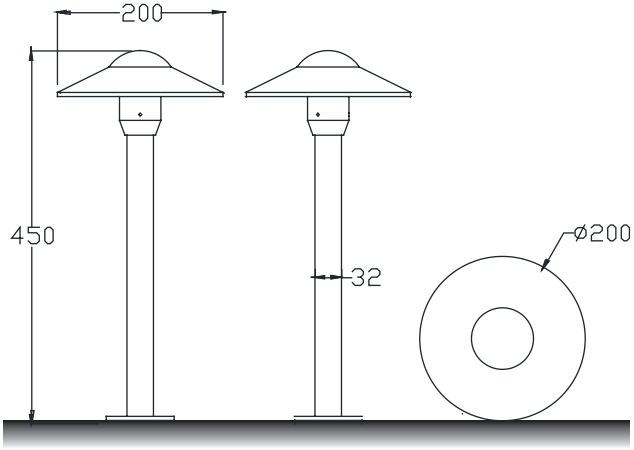

Installation plate

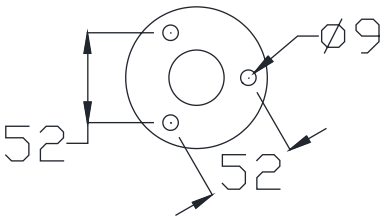

DM-BC18a

Colo(u)r temperature

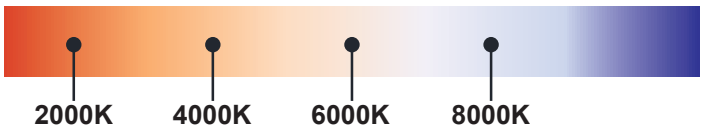

Bollard light

IP65

Rated power	12W	Power Factor	> 0.9
LED Quantity	1pcs	Life	> 50000H
Color Temperature	6000k/4000k/3000k	THD	< 15%
Luminous Flux	1100lm	Frequency Range	50/60HZ
Input Voltage	AC100~277V	Lnstallation Pipe Diameter	/
Protection Grade	IP65	CRI	> 90
Operating Temperature	-30~50℃		

DM-BC18a

Standard colours

9004 9006 9007 9016

Bollard light

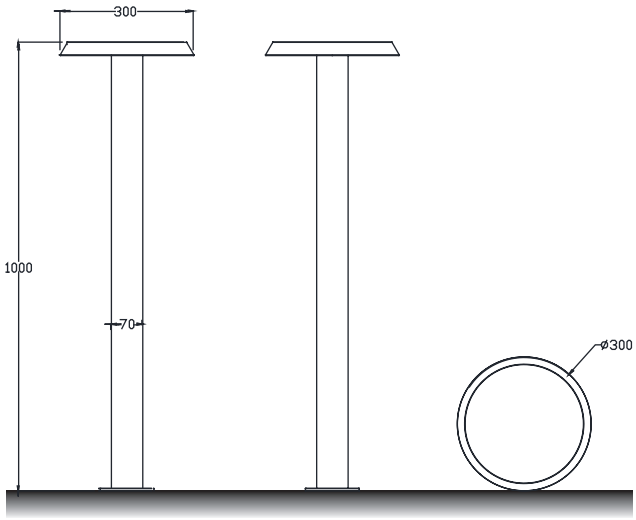

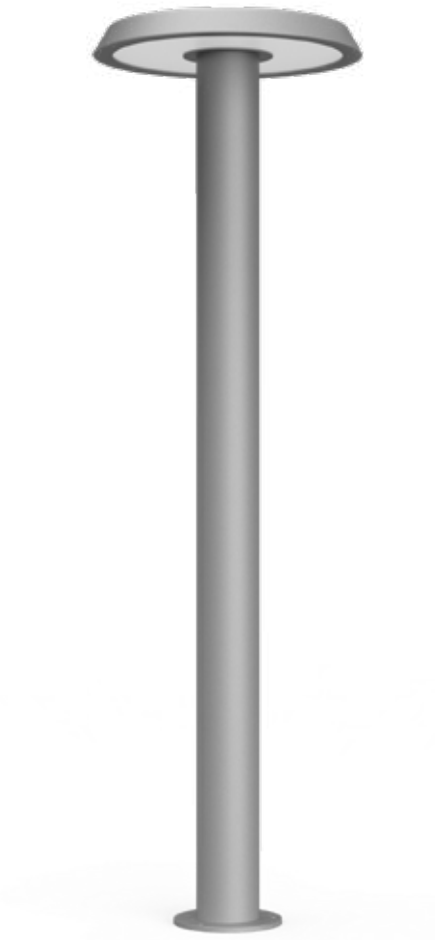

Installation plate

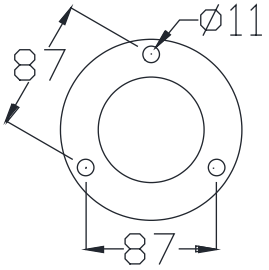

DM-BC19a

Colo(u)r temperature

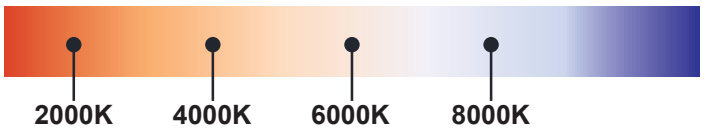

Bollard light

IP65

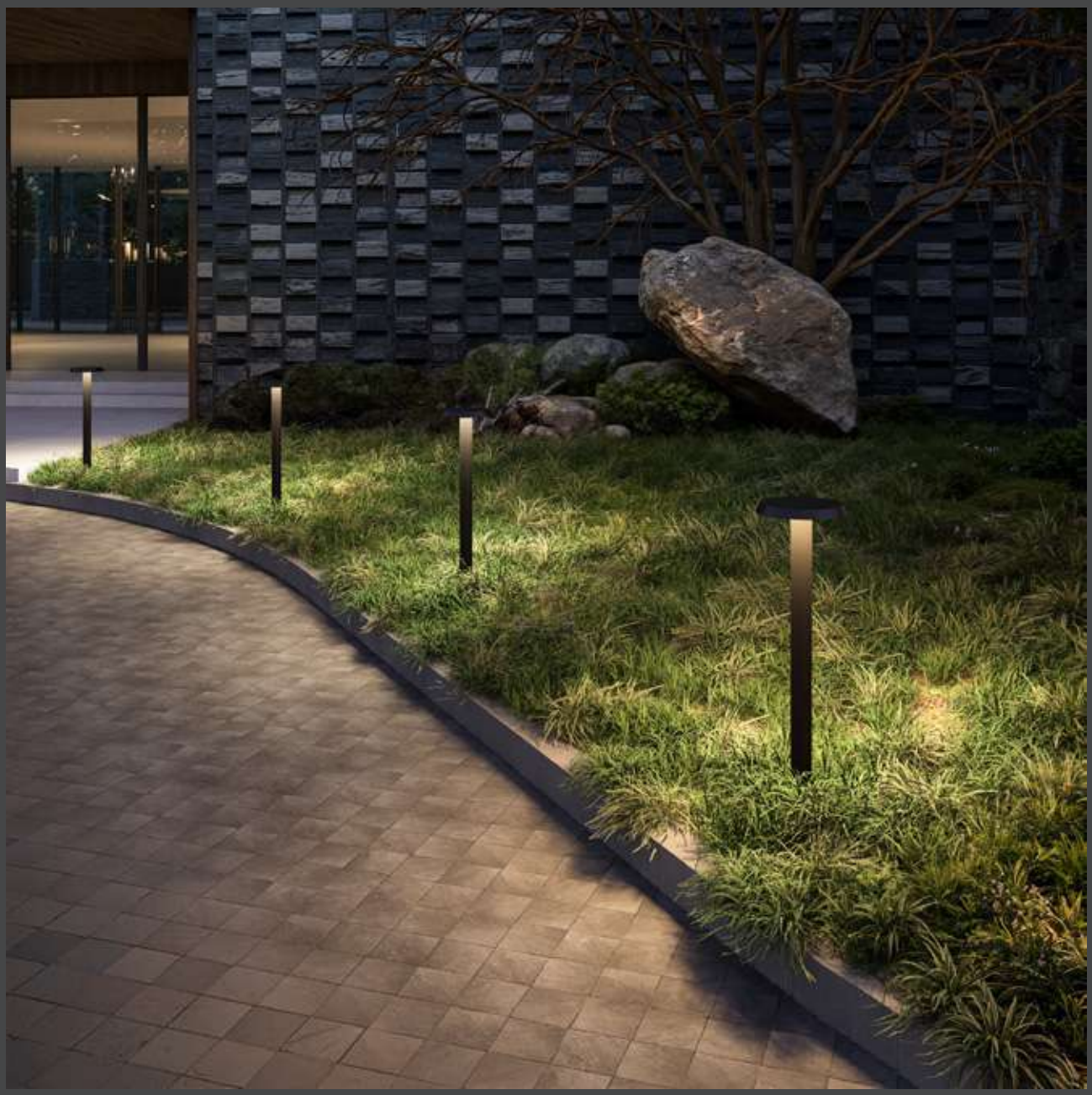

Rated power	12W	Power Factor	> 0.9
LED Quantity	1pcs	Life	> 50000H
Color Temperature	6000k/4000k/3000k	THD	< 15%
Luminous Flux	1100lm	Frequency Range	50/60HZ
Input Voltage	AC100~277V	Lnstallation Pipe Diameter	/
Protection Grade	IP65	CRI	> 90
Operating Temperature	-30~50℃		

DM-BC19a

Standard colours

9004 9006 9007 9016

Bollard light

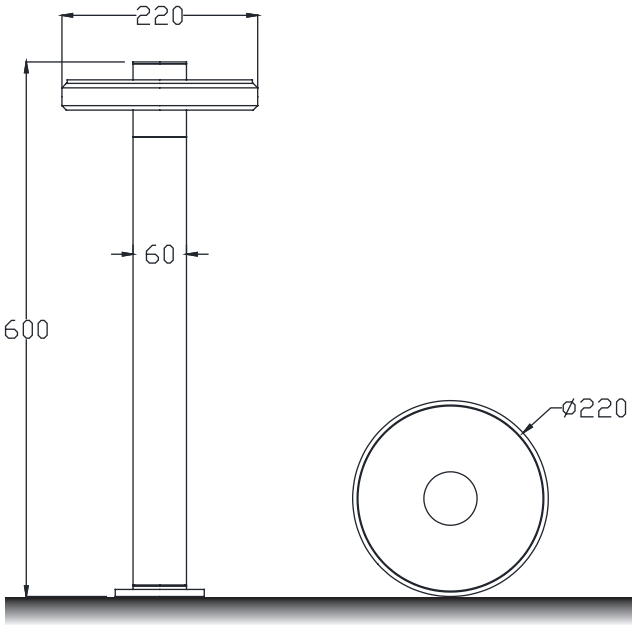

Installation plate

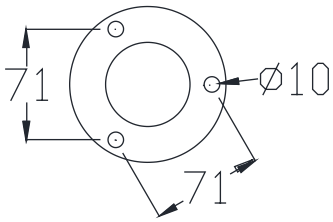

DM-BC20a

Colo(u)r temperature

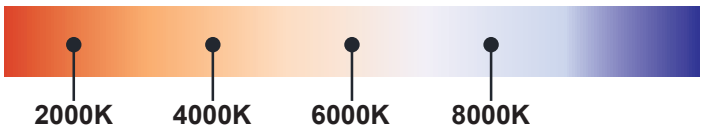

Bollard light

IP65

Rated power	12W	Power Factor	> 0.9
LED Quantity	1pcs	Life	> 50000H
Color Temperature	6000k/4000k/3000k	THD	< 15%
Luminous Flux	1100lm	Frequency Range	50/60HZ
Input Voltage	AC100~277V	Lnstallation Pipe Diameter	/
Protection Grade	IP65	CRI	> 90
Operating Temperature	-30~50℃		

DM-BC20a

Standard colours

9004 9006 9007 9016

Bollard light

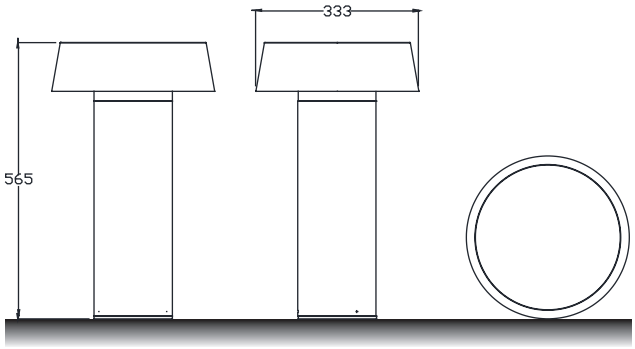

Installation plate

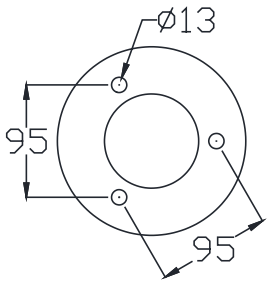

DM-BC21a

Colo(u)r temperature

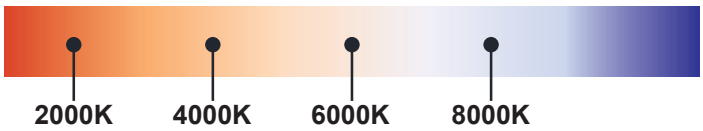

Bollard light

IP65

Rated power	12W	Power Factor	> 0.9
LED Quantity	1pcs	Life	> 50000H
Color Temperature	6000k/4000k/3000k	THD	< 15%
Luminous Flux	1100lm	Frequency Range	50/60HZ
Input Voltage	AC100~277V	Lnstallation Pipe Diameter	/
Protection Grade	IP65	CRI	> 90
Operating Temperature	-30~50℃		

DM-BC21a

Standard colours

9004 9006 9007 9016

Bollard light

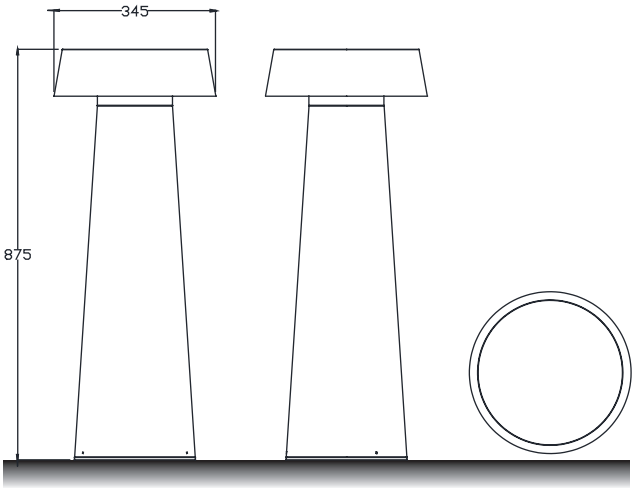

Installation plate

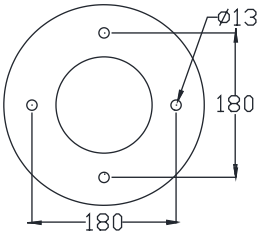

DM-BC22a

Colo(u)r temperature

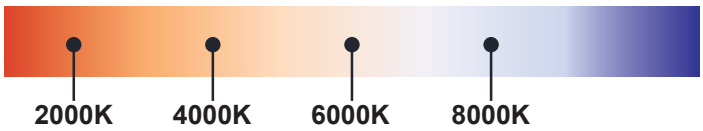

Bollard light

IP65

Rated power	12W	Power Factor	> 0.9
LED Quantity	1pcs	Life	> 50000H
Color Temperature	6000k/4000k/3000k	THD	< 15%
Luminous Flux	1100lm	Frequency Range	50/60HZ
Input Voltage	AC100~277V	Lnstallation Pipe Diameter	/
Protection Grade	IP65	CRI	> 90
Operating Temperature	-30~50℃		

DM-BC22a

Standard colours

9004 9006 9007 9016

Bollard light

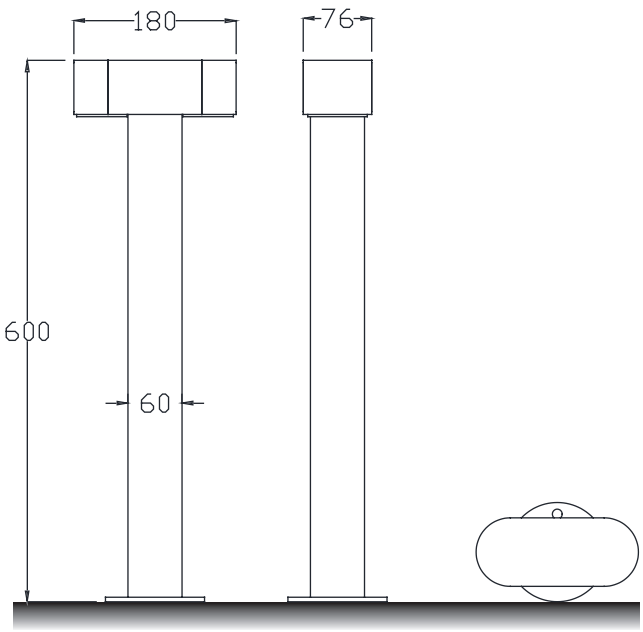

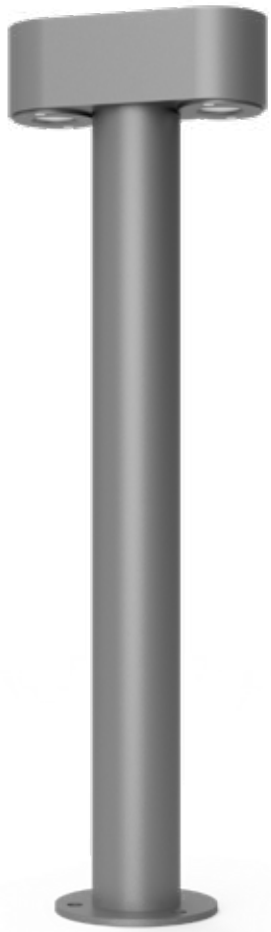

Installation plate

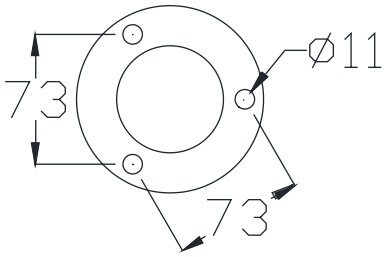

DM-BC23a

Colo(u)r temperature

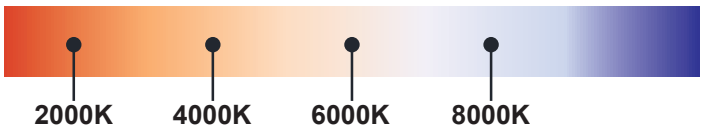

Bollard light

IP65

Rated power	12W	Power Factor	> 0.9
LED Quantity	1pcs	Life	> 50000H
Color Temperature	6000k/4000k/3000k	THD	< 15%
Luminous Flux	1100lm	Frequency Range	50/60HZ
Input Voltage	AC100~277V	Lnstallation Pipe Diameter	/
Protection Grade	IP65	CRI	> 90
Operating Temperature	-30~50℃		

DM-BC23a

Standard colours

9004 9006 9007 9016

Bollard light

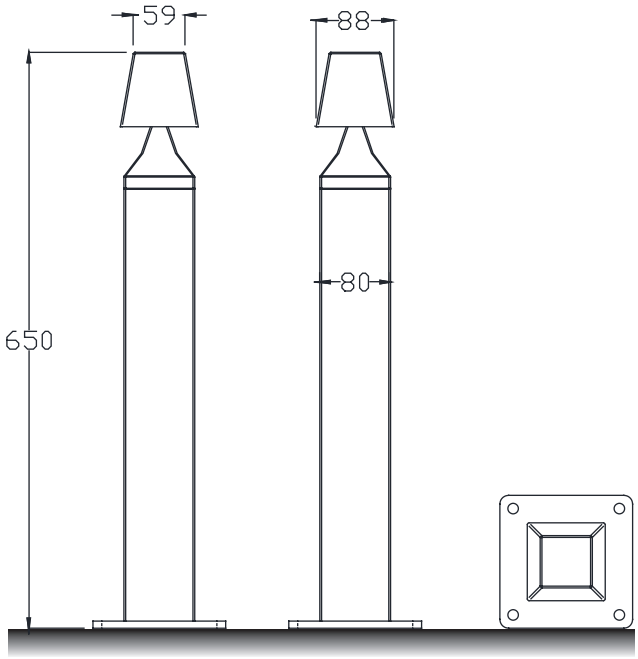

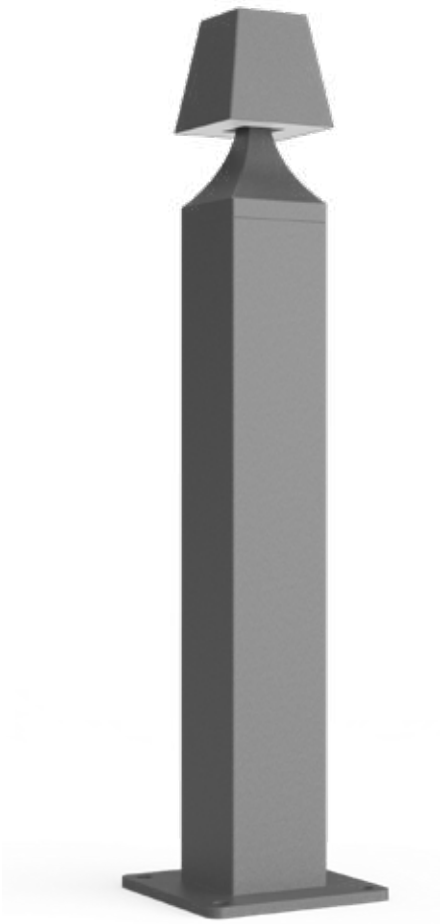

Installation plate

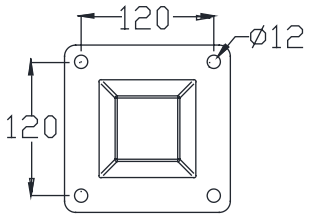

DM-BC24a

Colo(u)r temperature

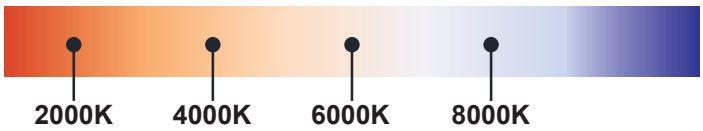

Bollard light

IP65

Rated power	12W	Power Factor	> 0.9
LED Quantity	1pcs	Life	> 50000H
Color Temperature	6000k/4000k/3000k	THD	< 15%
Luminous Flux	1100lm	Frequency Range	50/60HZ
Input Voltage	AC100~277V	Lnstallation Pipe Diameter	/
Protection Grade	IP65	CRI	> 90
Operating Temperature	-30~50℃		

DM-BC24a

Standard colours

9004 9006 9007 9016

Bollard light

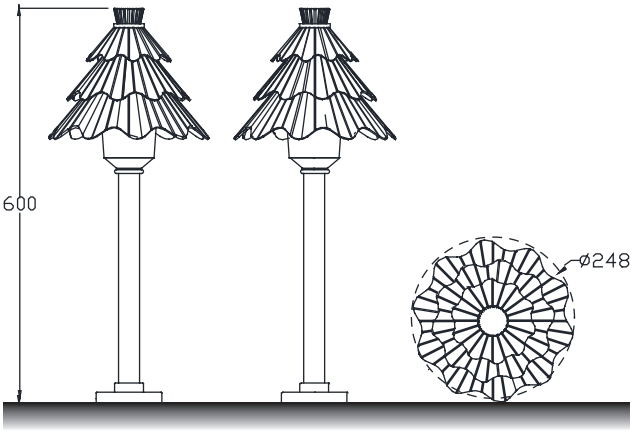

Installation plate

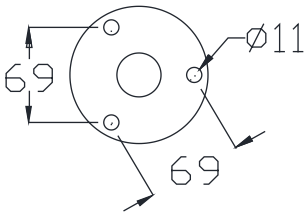

DM-BC25a

Colo(u)r temperature

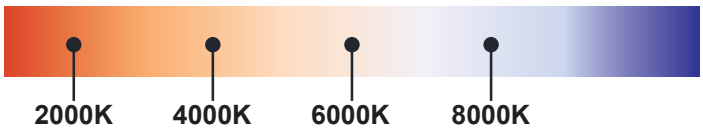

Bollard light

IP65

Rated power	12W	Power Factor	> 0.9
LED Quantity	1pcs	Life	> 50000H
Color Temperature	6000k/4000k/3000k	THD	< 15%
Luminous Flux	1100lm	Frequency Range	50/60HZ
Input Voltage	AC100~277V	Lnstallation Pipe Diameter	/
Protection Grade	IP65	CRI	> 90
Operating Temperature	-30~50℃		

DM-BC25a

Standard colours

9004 9006 9007 9016

Bollard light

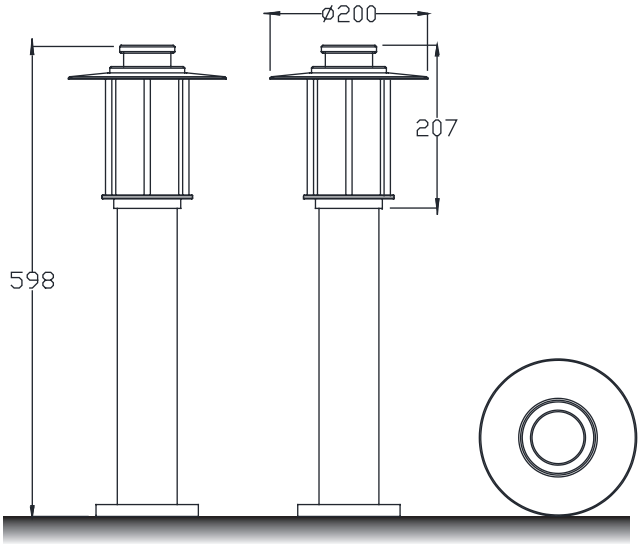

Installation plate

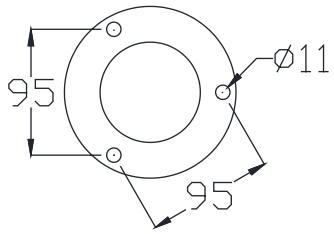

DM-BC26a

Colo(u)r temperature

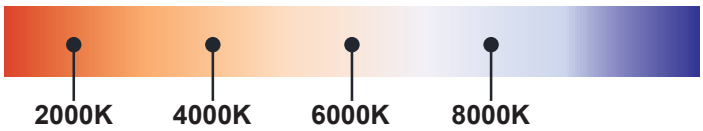

Bollard light

IP65

Rated power	12W	Power Factor	> 0.9
LED Quantity	1pcs	Life	> 50000H
Color Temperature	6000k/4000k/3000k	THD	< 15%
Luminous Flux	1100lm	Frequency Range	50/60HZ
Input Voltage	AC100~277V	Lnstallation Pipe Diameter	/
Protection Grade	IP65	CRI	> 90
Operating Temperature	-30~50℃		

DM-BC26a

Standard colours

9004 9006 9007 9016

Bollard light

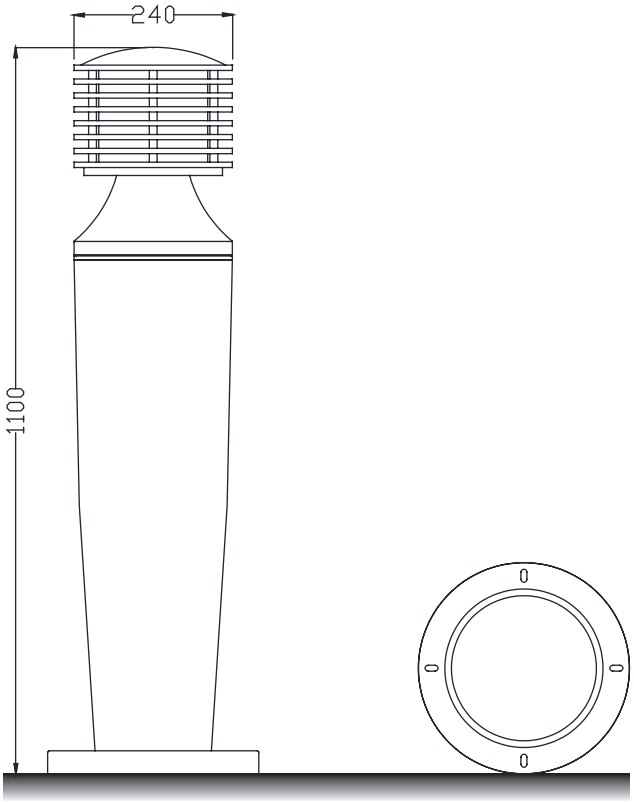

Installation plate

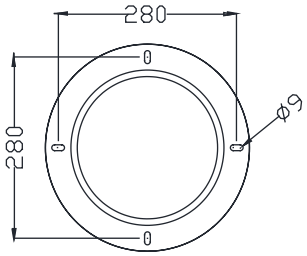

DM-BC27a

Colo(u)r temperature

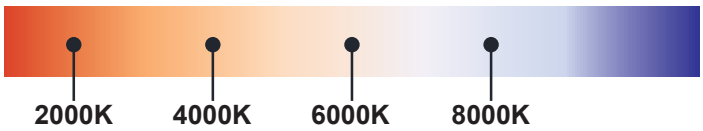

Bollard light

IP65

Rated power	12W	Power Factor	> 0.9
LED Quantity	1pcs	Life	> 50000H
Color Temperature	6000k/4000k/3000k	THD	< 15%
Luminous Flux	1100lm	Frequency Range	50/60HZ
Input Voltage	AC100~277V	Lnstallation Pipe Diameter	/
Protection Grade	IP65	CRI	> 90
Operating Temperature	-30~50℃		

DM-BC27a

Standard colours

9004 9006 9007 9016

Bollard light

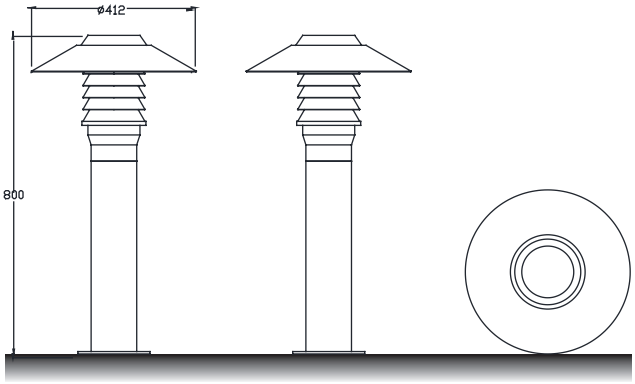

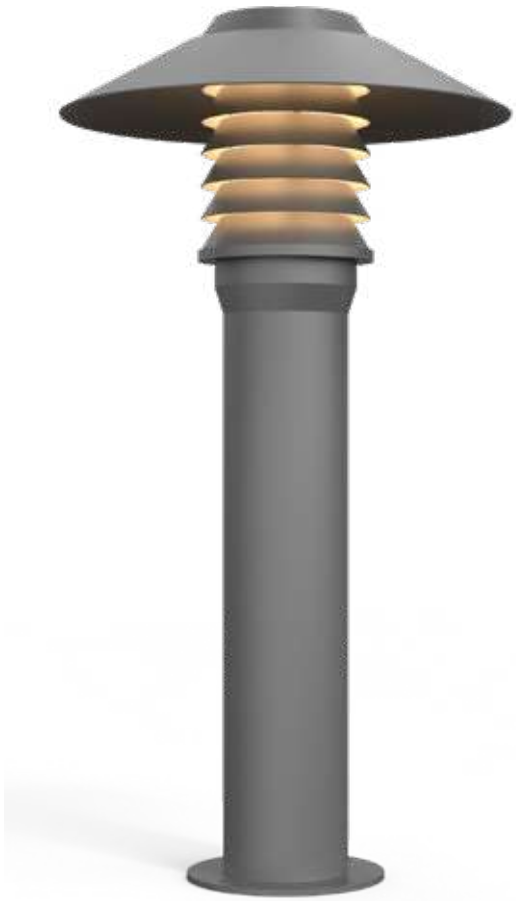

Installation plate

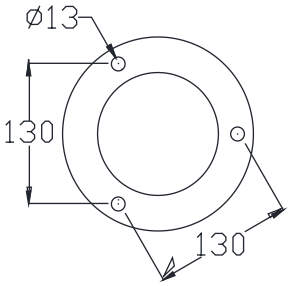

DM-BC28a

Colo(u)r temperature

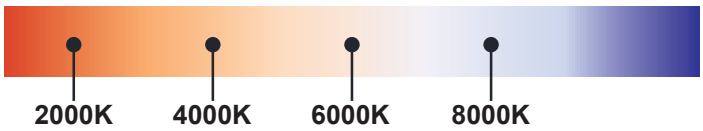

Bollard light

IP65

Rated power	12W	Power Factor	> 0.9
LED Quantity	1pcs	Life	> 50000H
Color Temperature	6000k/4000k/3000k	THD	< 15%
Luminous Flux	1100lm	Frequency Range	50/60HZ
Input Voltage	AC100~277V	Lnstallation Pipe Diameter	/
Protection Grade	IP65	CRI	> 90
Operating Temperature	-30~50℃		

DM-BC28a

Standard colours

9004 9006 9007 9016

Bollard light

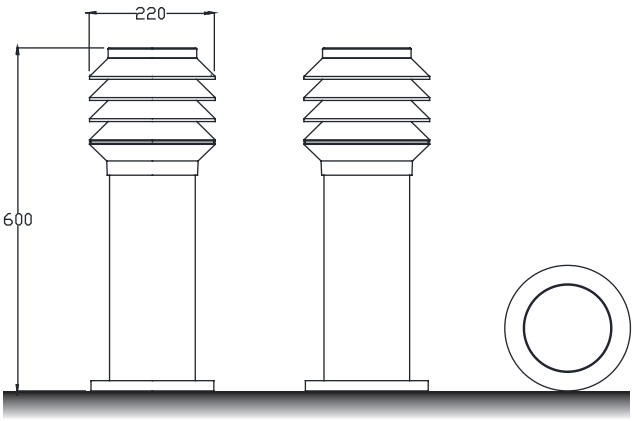

Installation plate

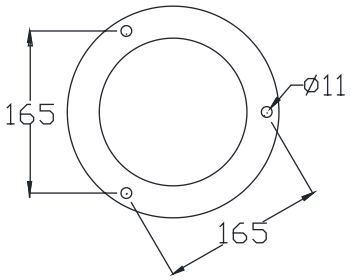

DM-BC29a

Colo(u)r temperature

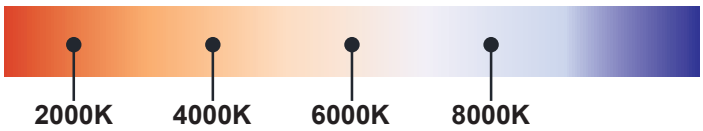

Bollard light

IP65

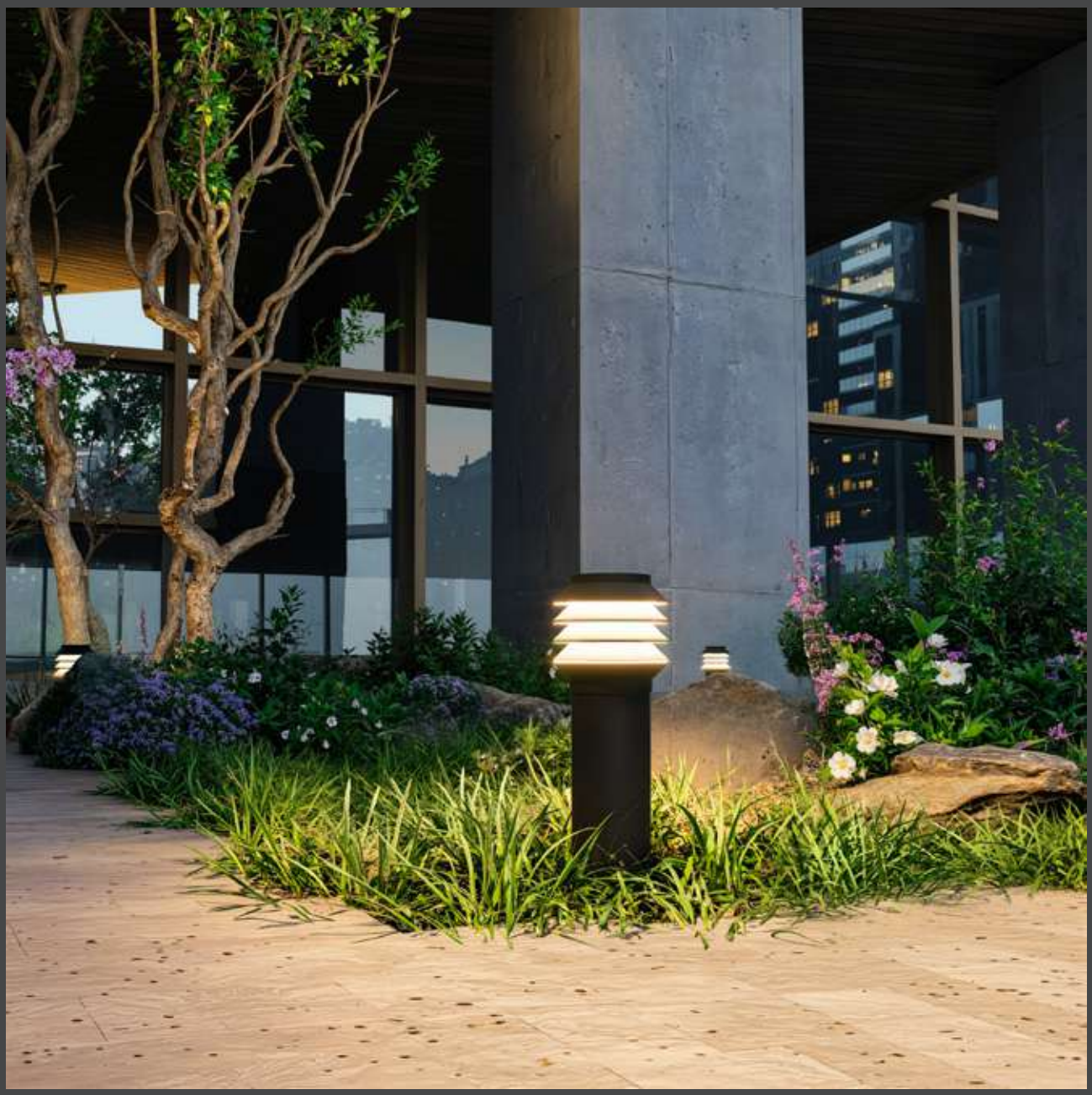

Rated power	12W	Power Factor	> 0.9
LED Quantity	1pcs	Life	> 50000H
Color Temperature	6000k/4000k/3000k	THD	< 15%
Luminous Flux	1100lm	Frequency Range	50/60HZ
Input Voltage	AC100~277V	Lnstallation Pipe Diameter	/
Protection Grade	IP65	CRI	> 90
Operating Temperature	-30~50℃		

DM-BC29a

Standard colours

9004 9006 9007 9016

Bollard light

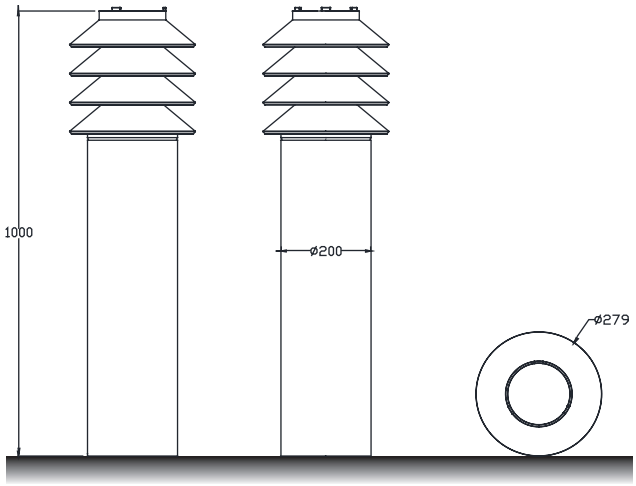

Installation plate

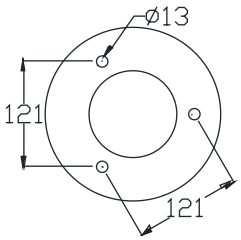

DM-BC30a

Colo(u)r temperature

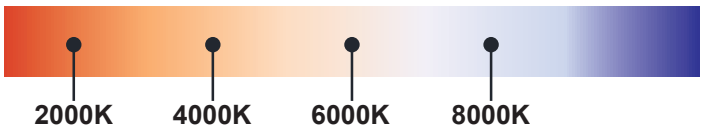

Bollard light

IP65

Rated power	12W	Power Factor	> 0.9
LED Quantity	1pcs	Life	> 50000H
Color Temperature	6000k/4000k/3000k	THD	< 15%
Luminous Flux	1100lm	Frequency Range	50/60HZ
Input Voltage	AC100~277V	Lnstallation Pipe Diameter	/
Protection Grade	IP65	CRI	> 90
Operating Temperature	-30~50℃		

DM-BC30a

Standard colours

9004 9006 9007 9016

Bollard light

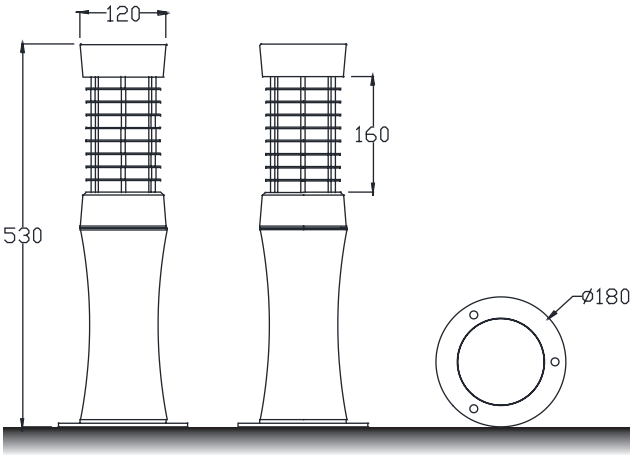

Installation plate

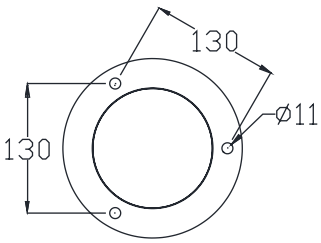

DM-BC31a

Colo(u)r temperature

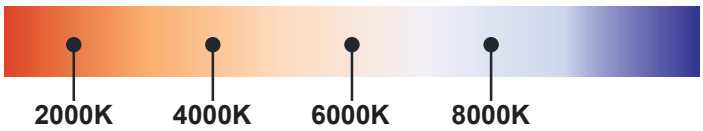

Bollard light

IP65

Rated power	12W	Power Factor	> 0.9
LED Quantity	1pcs	Life	> 50000H
Color Temperature	6000k/4000k/3000k	THD	< 15%
Luminous Flux	1100lm	Frequency Range	50/60HZ
Input Voltage	AC100~277V	Lnstallation Pipe Diameter	/
Protection Grade	IP65	CRI	> 90
Operating Temperature	-30~50℃		

DM-BC31a

Standard colours

9004 9006 9007 9016

Bollard light

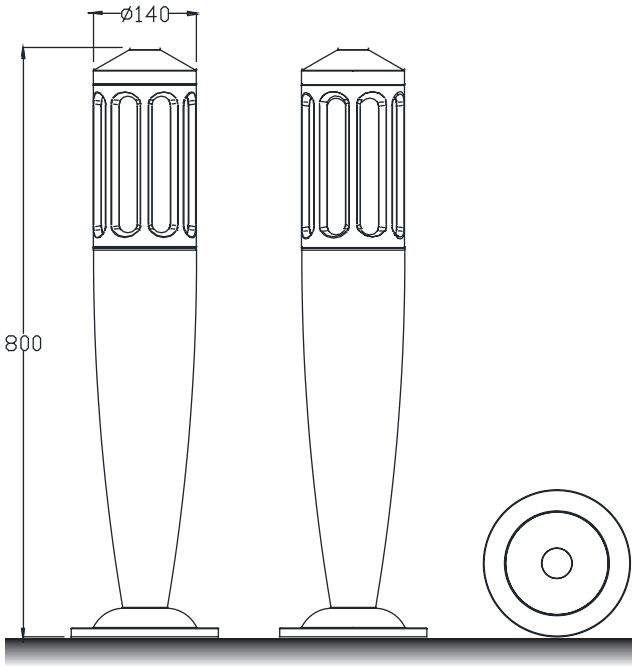

Installation plate

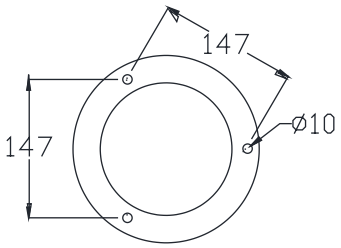

DM-BC32a

Colo(u)r temperature

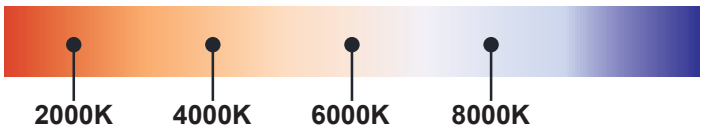

Bollard light

IP65

Rated power	12W	Power Factor	> 0.9
LED Quantity	1pcs	Life	> 50000H
Color Temperature	6000k/4000k/3000k	THD	< 15%
Luminous Flux	1100lm	Frequency Range	50/60HZ
Input Voltage	AC100~277V	Lnstallation Pipe Diameter	/
Protection Grade	IP65	CRI	> 90
Operating Temperature	-30~50℃		

DM-BC32a

Standard colours

9004 9006 9007 9016

Bollard light

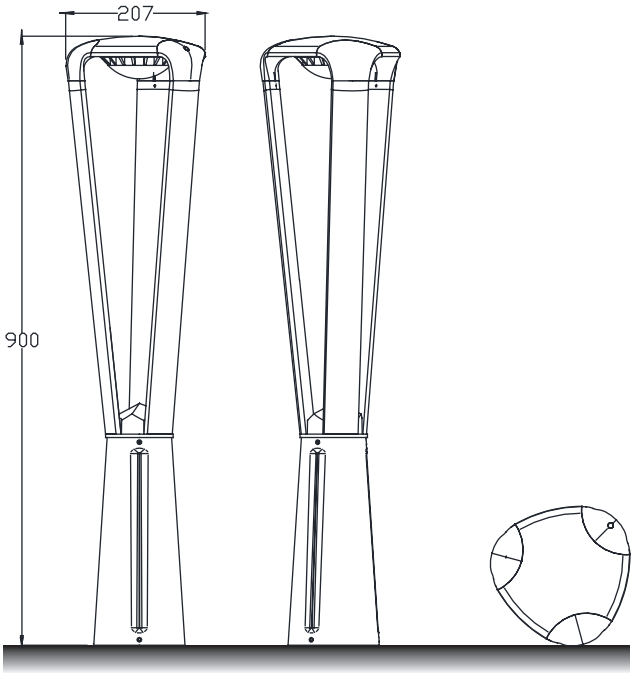

Installation plate

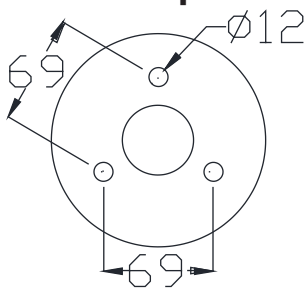

DM-BC33a

Colo(u)r temperature

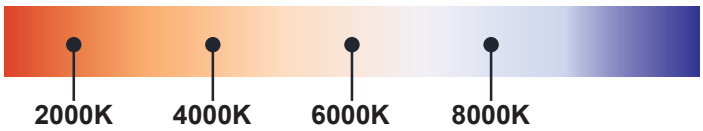

Bollard light

IP65

Rated power	12W	Power Factor	> 0.9
LED Quantity	1pcs	Life	> 50000H
Color Temperature	6000k/4000k/3000k	THD	< 15%
Luminous Flux	1100lm	Frequency Range	50/60HZ
Input Voltage	AC100~277V	Lnstallation Pipe Diameter	/
Protection Grade	IP65	CRI	> 90
Operating Temperature	-30~50℃		

DM-BC33a

Standard colours

9004 9006 9007 9016

Bollard light

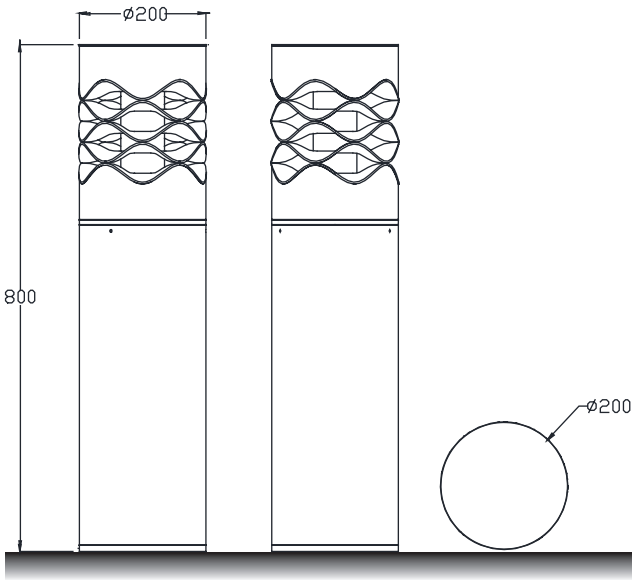

Installation plate

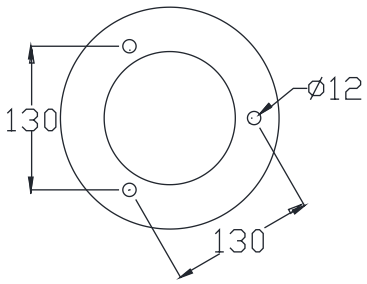

DM-BC34a

Colo(u)r temperature

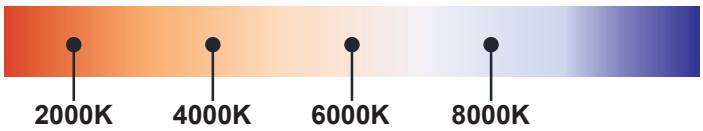

Bollard light

IP65

Rated power	12W	Power Factor	> 0.9
LED Quantity	1pcs	Life	> 50000H
Color Temperature	6000k/4000k/3000k	THD	< 15%
Luminous Flux	1100lm	Frequency Range	50/60HZ
Input Voltage	AC100~277V	Lnstallation Pipe Diameter	/
Protection Grade	IP65	CRI	> 90
Operating Temperature	-30~50℃		

DM-BC34a

Standard colours

9004 9006 9007 9016

Bollard light

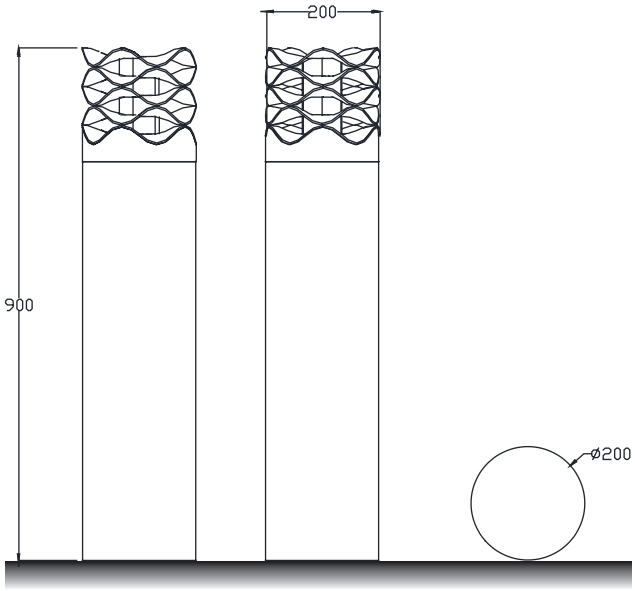

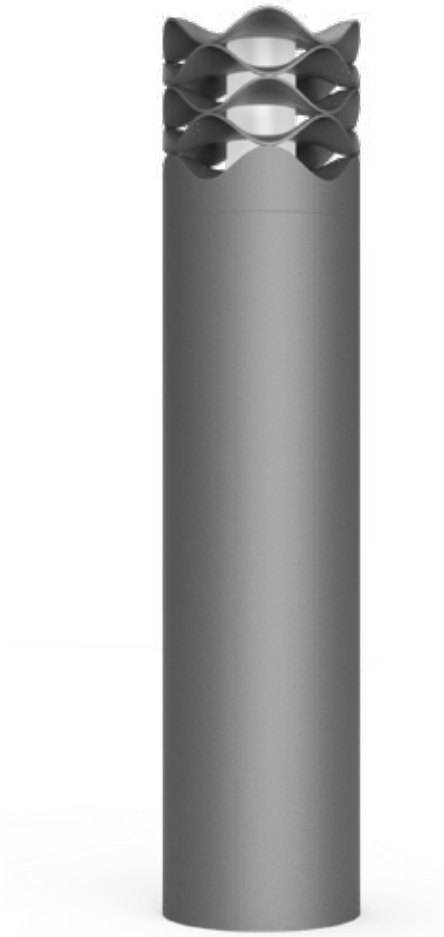

Installation plate

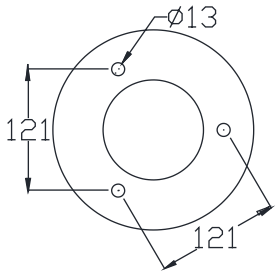

DM-BC35a

Colo(u)r temperature

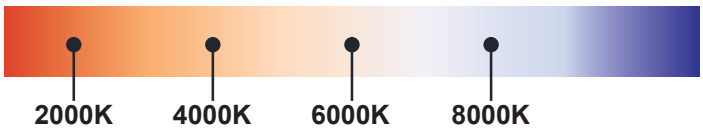

Bollard light

IP65

Rated power	12W	Power Factor	> 0.9
LED Quantity	1pcs	Life	> 50000H
Color Temperature	6000k/4000k/3000k	THD	< 15%
Luminous Flux	1100lm	Frequency Range	50/60HZ
Input Voltage	AC100~277V	Lnstallation Pipe Diameter	/
Protection Grade	IP65	CRI	> 90
Operating Temperature	-30~50℃		

DM-BC35a

Standard colours

9004 9006 9007 9016

Bollard light

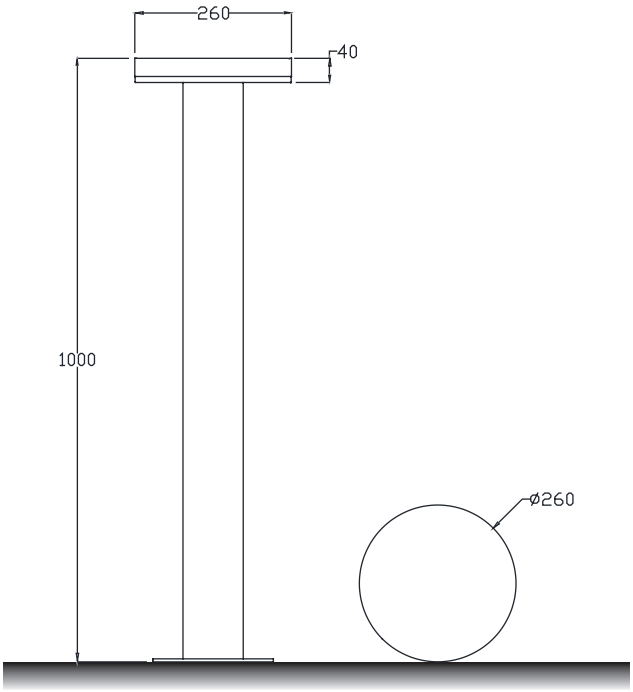

Installation plate

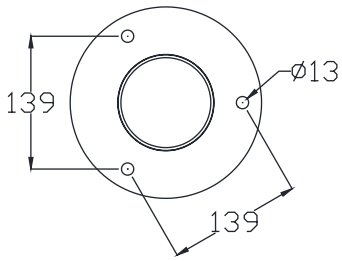

DM-BC36a

Colo(u)r temperature

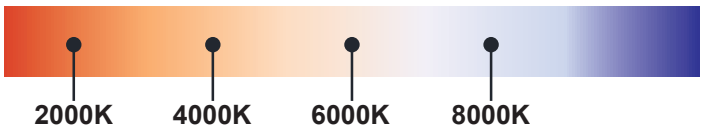

Bollard light

IP65

Rated power	12W	Power Factor	> 0.9
LED Quantity	1pcs	Life	> 50000H
Color Temperature	6000k/4000k/3000k	THD	< 15%
Luminous Flux	1100lm	Frequency Range	50/60HZ
Input Voltage	AC100~277V	Lnstallation Pipe Diameter	/
Protection Grade	IP65	CRI	> 90
Operating Temperature	-30~50℃		

DM-BC36a

Standard colours

9004 9006 9007 9016

Bollard light

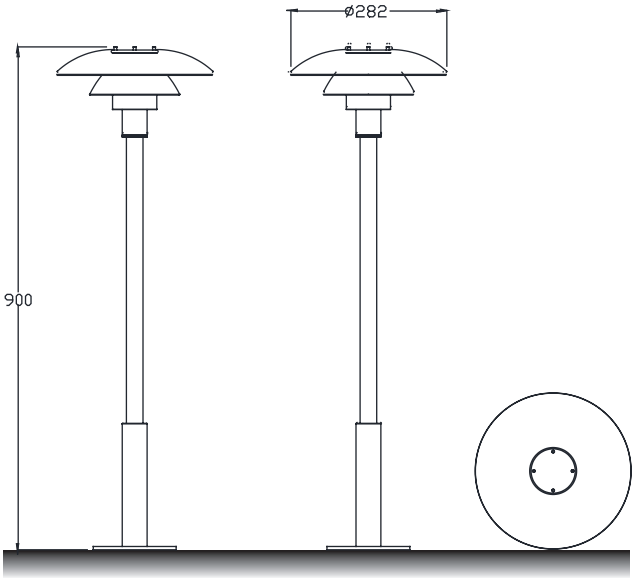

Installation plate

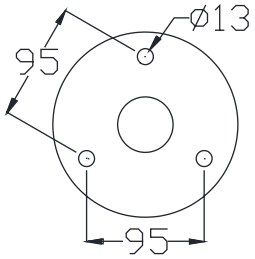

DM-BC37a

Colo(u)r temperature

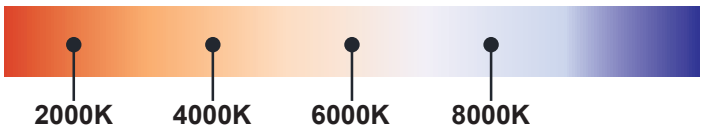

Bollard light

IP65

Rated power	12W	Power Factor	> 0.9
LED Quantity	1pcs	Life	> 50000H
Color Temperature	6000k/4000k/3000k	THD	< 15%
Luminous Flux	1100lm	Frequency Range	50/60HZ
Input Voltage	AC100~277V	Lnstallation Pipe Diameter	/
Protection Grade	IP65	CRI	> 90
Operating Temperature	-30~50℃		

DM-BC37a

Standard colours

9004 9006 9007 9016

Bollard light

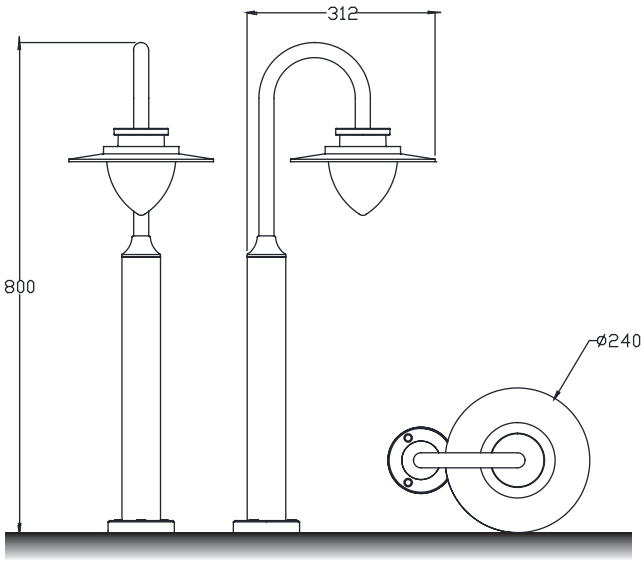

Installation plate

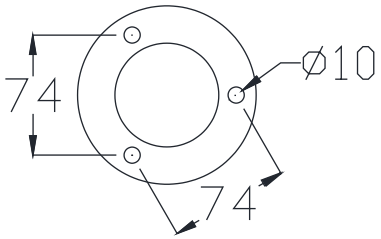

DM-BC38a

Colo(u)r temperature

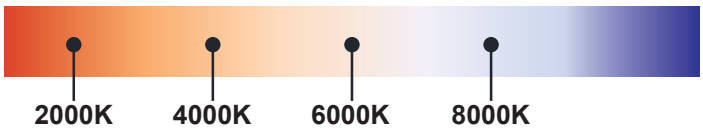

Bollard light

IP65

Rated power	12W	Power Factor	> 0.9
LED Quantity	1pcs	Life	> 50000H
Color Temperature	6000k/4000k/3000k	THD	< 15%
Luminous Flux	1100lm	Frequency Range	50/60HZ
Input Voltage	AC100~277V	Lnstallation Pipe Diameter	/
Protection Grade	IP65	CRI	> 90
Operating Temperature	-30~50℃		

DM-BC38a

Standard colours

9004 9006 9007 9016

Bollard light

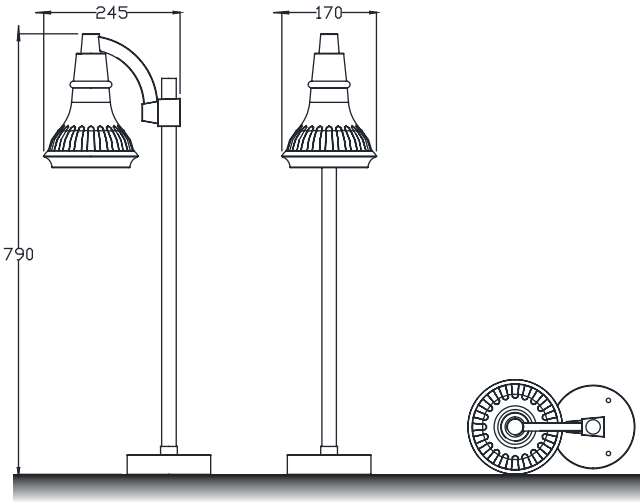

Installation plate

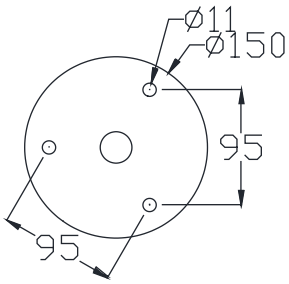

DM-BC39a

Colo(u)r temperature

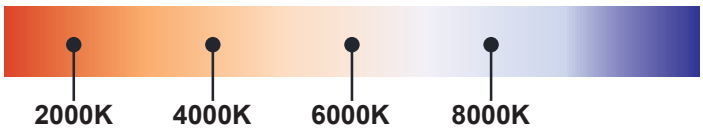

Bollard light

IP65

Rated power	12W	Power Factor	> 0.9
LED Quantity	1pcs	Life	> 50000H
Color Temperature	6000k/4000k/3000k	THD	< 15%
Luminous Flux	1100lm	Frequency Range	50/60HZ
Input Voltage	AC100~277V	Lnstallation Pipe Diameter	/
Protection Grade	IP65	CRI	> 90
Operating Temperature	-30~50℃		

DM-BC39a

Standard colours

9004 9006 9007 9016

Bollard light

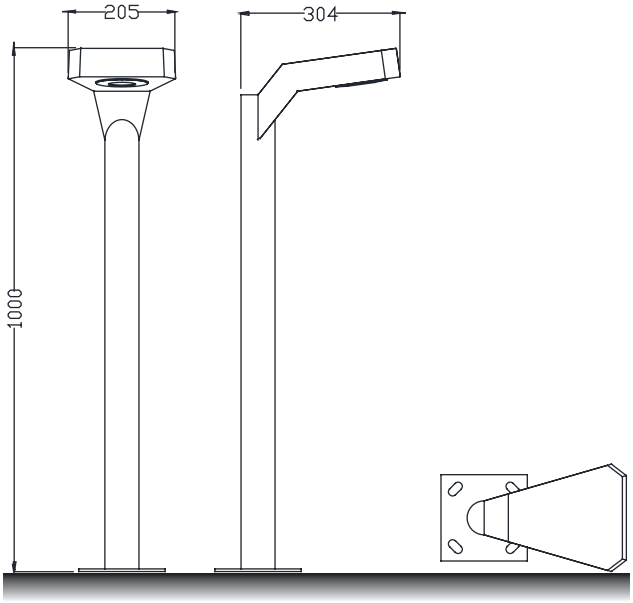

Installation plate

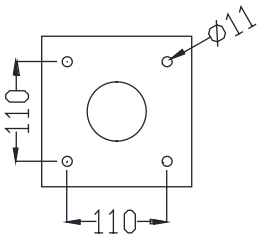

DM-BC40a

Colo(u)r temperature

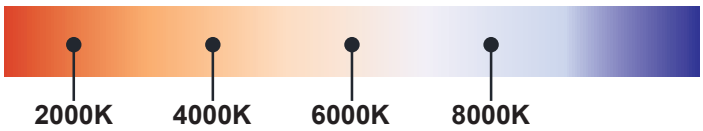

Bollard light

IP65

Rated power	12W	Power Factor	> 0.9
LED Quantity	1pcs	Life	> 50000H
Color Temperature	6000k/4000k/3000k	THD	< 15%
Luminous Flux	1100lm	Frequency Range	50/60HZ
Input Voltage	AC100~277V	Lnstallation Pipe Diameter	/
Protection Grade	IP65	CRI	> 90
Operating Temperature	-30~50℃		

DM-BC40a

Standard colours

9004 9006 9007 9016

Bollard light

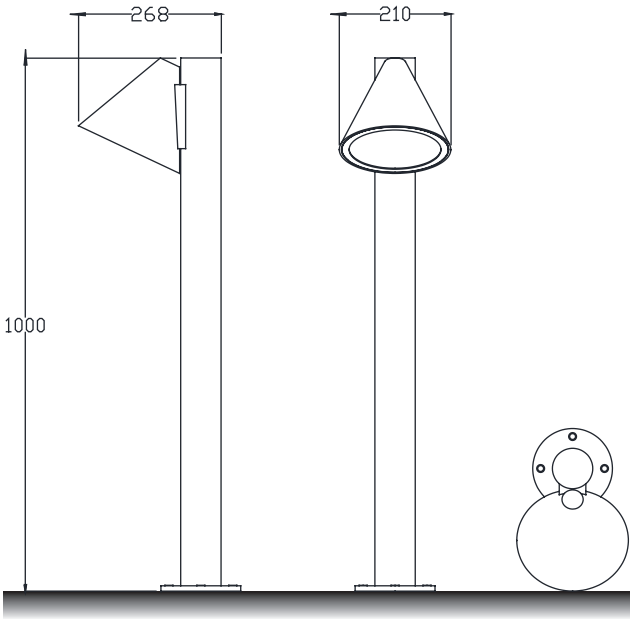

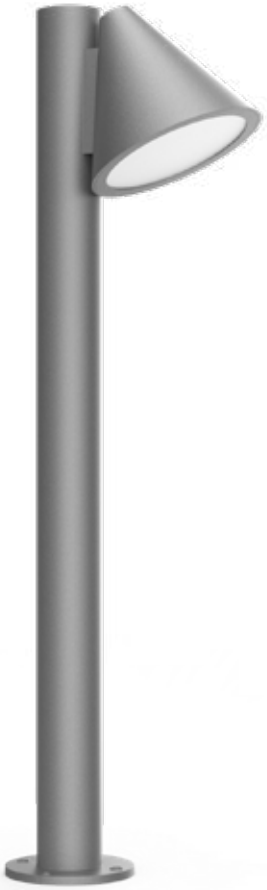

Installation plate

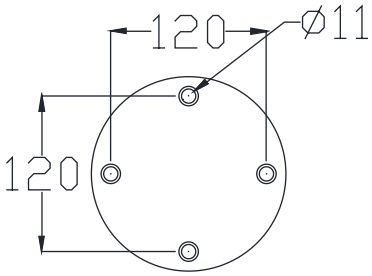

DM-BC41a

Colo(u)r temperature

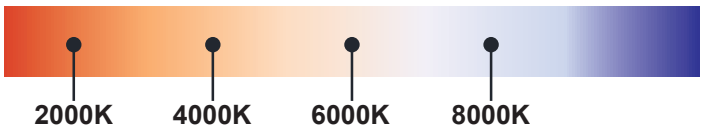

Bollard light

IP65

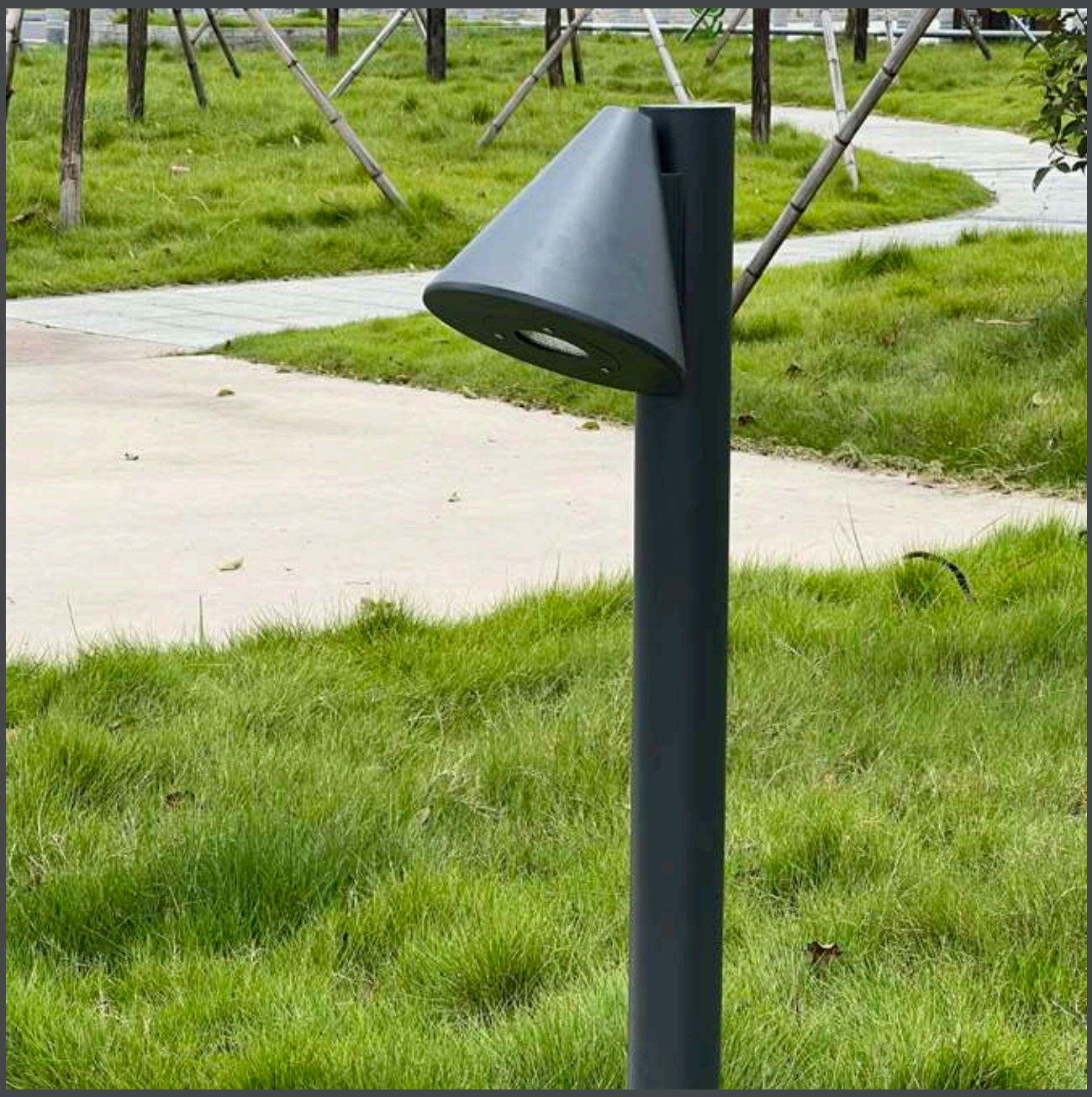

Rated power	12W	Power Factor	> 0.9
LED Quantity	1pcs	Life	> 50000H
Color Temperature	6000k/4000k/3000k	THD	< 15%
Luminous Flux	1100lm	Frequency Range	50/60HZ
Input Voltage	AC100~277V	Lnstallation Pipe Diameter	/
Protection Grade	IP65	CRI	> 90
Operating Temperature	-30~50℃		

DM-BC41a

Standard colours

9004 9006 9007 9016

Bollard light

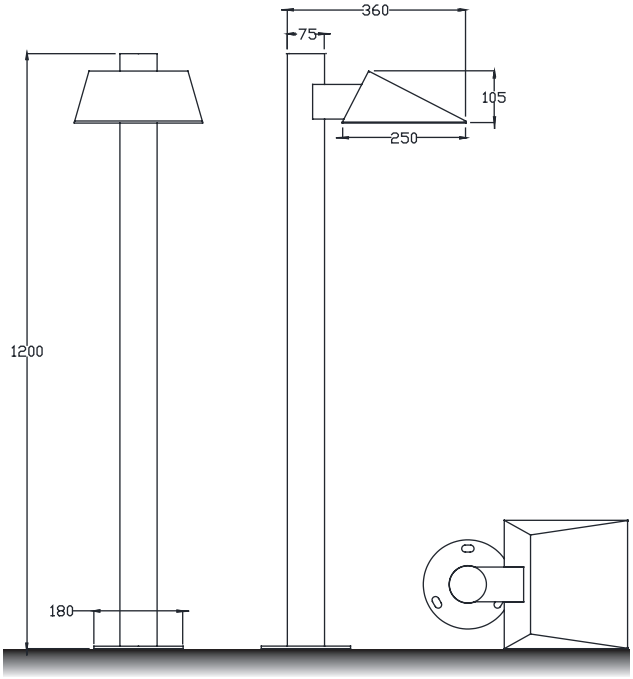

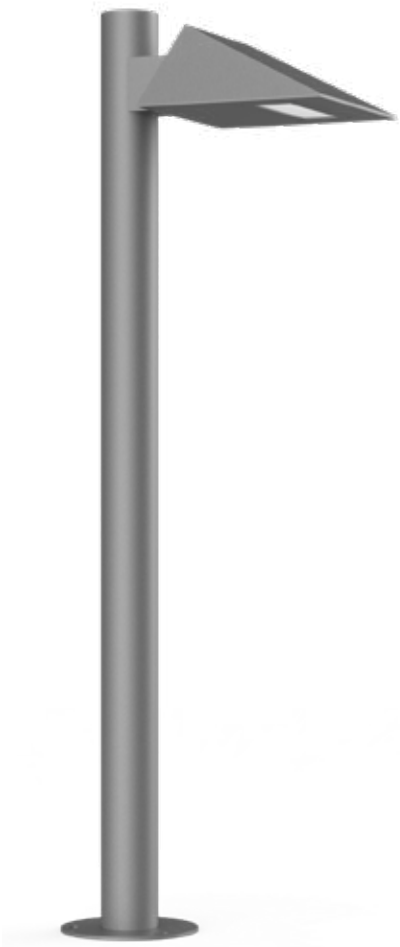

Installation plate

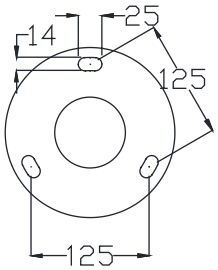

DM-BC42a

Colo(u)r temperature

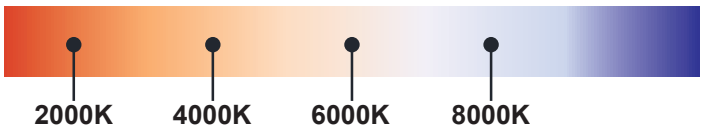

Bollard light

IP65

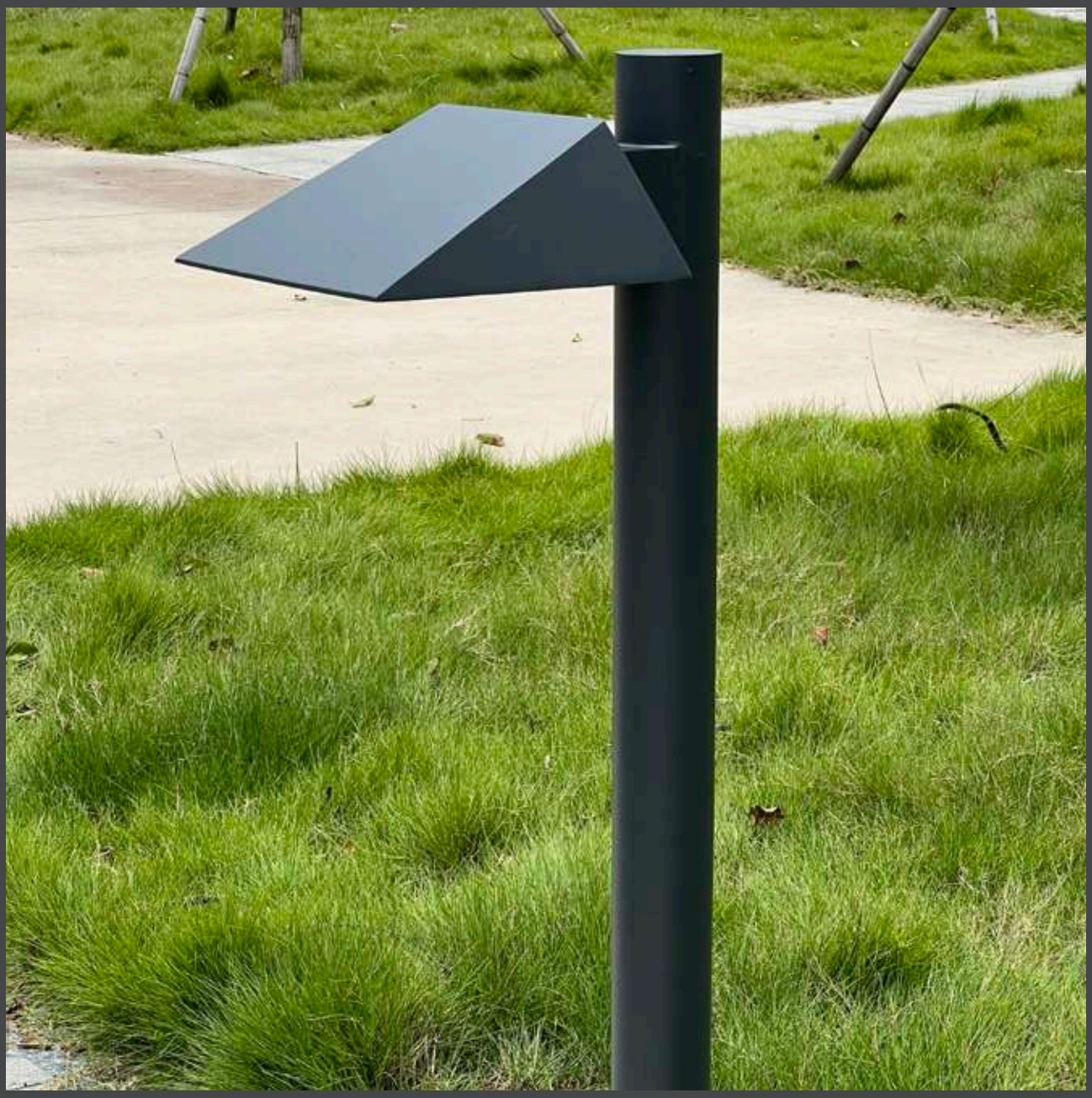

Rated power		12W	Power Factor	> 0.9
LED Quantity		1pcs	Life	> 50000H
Color Temperature	色温	6000k/4000k/3000k	THD	< 15%
Luminous Flux	初始光通量	1100lm	Frequency Range	50/60HZ
Input Voltage		AC100~277V	Lnstallation Pipe Diameter	/
Protection Grade		IP65	CRI	> 70
Operating Temperature		-30~50℃		

DM-BC42a

Standard colours

9004 9006 9007 9016

Bollard light

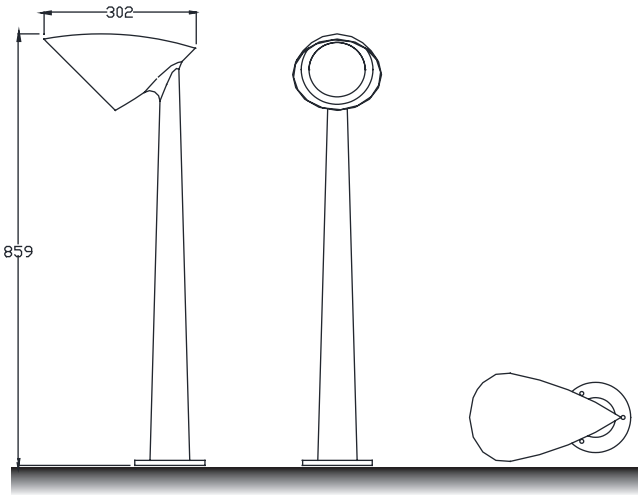

Installation plate

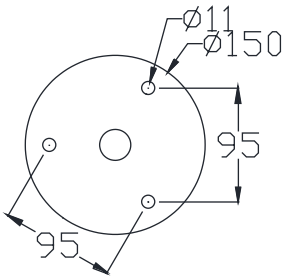

DM-BC43a

Colo(u)r temperature

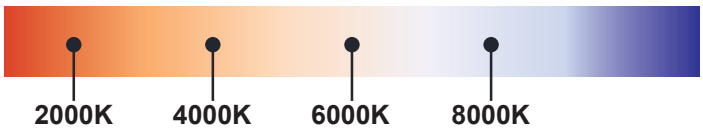

Bollard light

IP65

Rated power	12W	Power Factor	> 0.9
LED Quantity	1pcs	Life	> 50000H
Color Temperature	6000k/4000k/3000k	THD	< 15%
Luminous Flux	1100lm	Frequency Range	50/60HZ
Input Voltage	AC100~277V	Lnstallation Pipe Diameter	/
Protection Grade	IP65	CRI	> 90
Operating Temperature	-30~50℃		

DM-BC43a

Standard colours

9004 9006 9007 9016

Bollard light

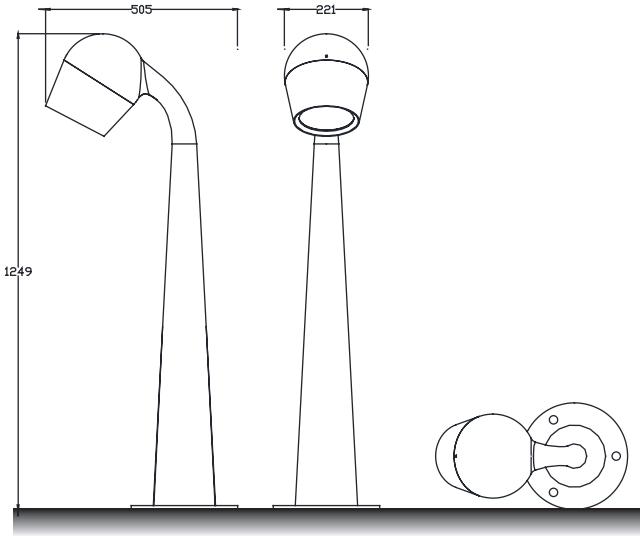

Installation plate

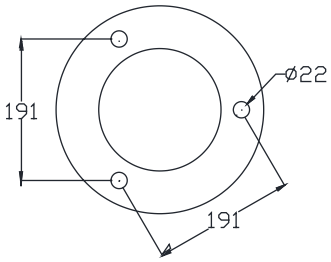

DM-BC44a

Colo(u)r temperature

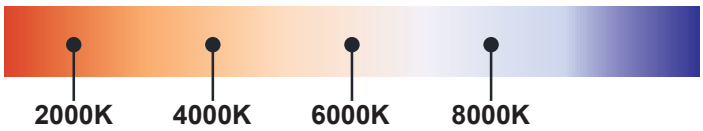

Bollard light

IP65

Rated power	12W	Power Factor	> 0.9
LED Quantity	1pcs	Life	> 50000H
Color Temperature	6000k/4000k/3000k	THD	< 15%
Luminous Flux	1100lm	Frequency Range	50/60HZ
Input Voltage	AC100~277V	Lnstallation Pipe Diameter	/
Protection Grade	IP65	CRI	> 90
Operating Temperature	-30~50℃		

DM-BC44a

Standard colours

9004 9006 9007 9016

Bollard light

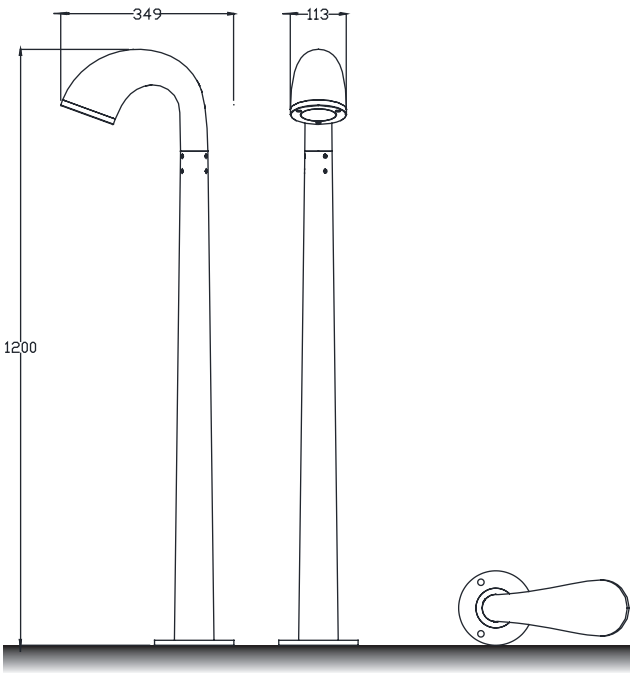

Installation plate

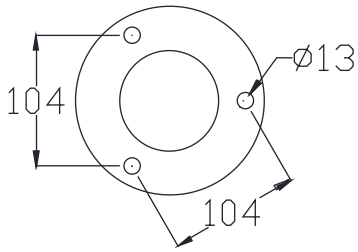

DM-BC45a

Colo(u)r temperature

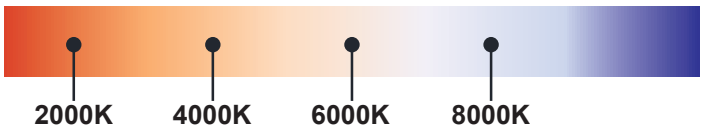

Bollard light

IP65

Rated power	12W	Power Factor	> 0.9
LED Quantity	1pcs	Life	> 50000H
Color Temperature	6000k/4000k/3000k	THD	< 15%
Luminous Flux	1100lm	Frequency Range	50/60HZ
Input Voltage	AC100~277V	Lnstallation Pipe Diameter	/
Protection Grade	IP65	CRI	> 90
Operating Temperature	-30~50℃		

DM-BC45a

Standard colours

9004 9006 9007 9016

Bollard light

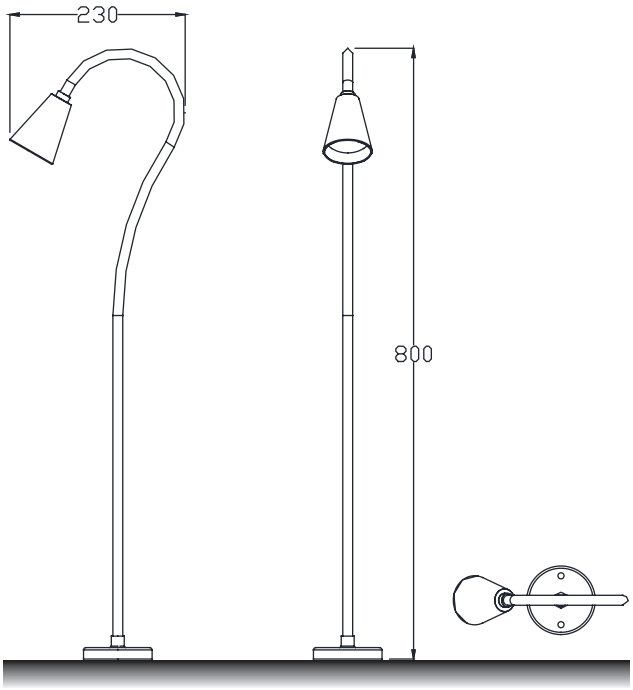

Installation plate

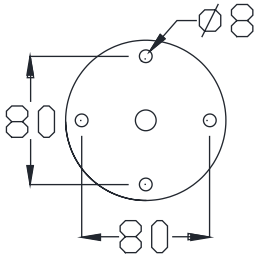

DM-BC46a

Colo(u)r temperature

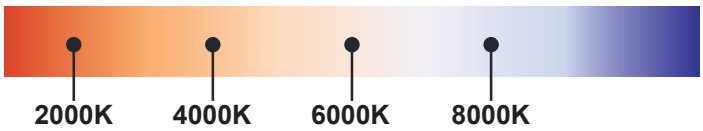

Bollard light

IP65

Rated power	12W	Power Factor	> 0.9
LED Quantity	1pcs	Life	> 50000H
Color Temperature	6000k/4000k/3000k	THD	< 15%
Luminous Flux	1100lm	Frequency Range	50/60HZ
Input Voltage	AC100~277V	Lnstallation Pipe Diameter	/
Protection Grade	IP65	CRI	> 90
Operating Temperature	-30~50℃		

DM-BC46a

Standard colours

9004 9006 9007 9016

Bollard light

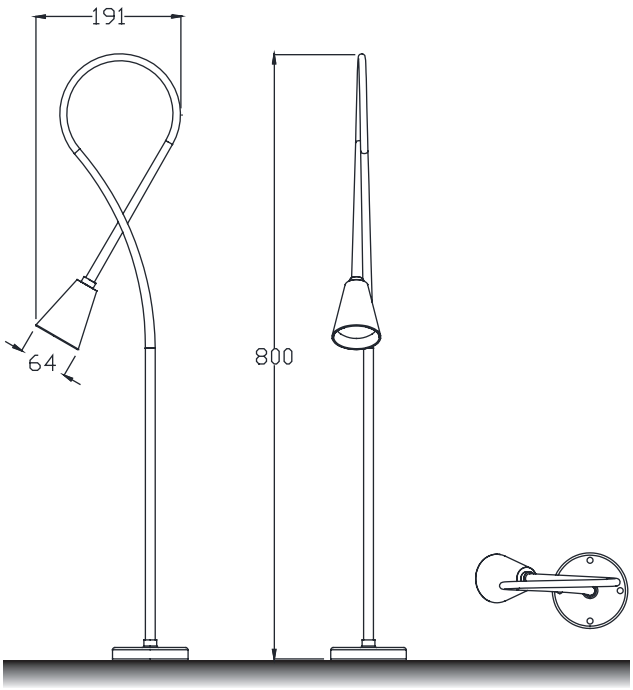

Installation plate

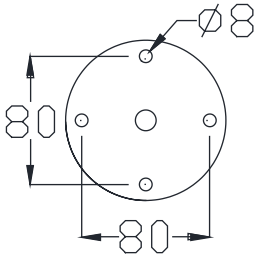

DM-BC47a

Colo(u)r temperature

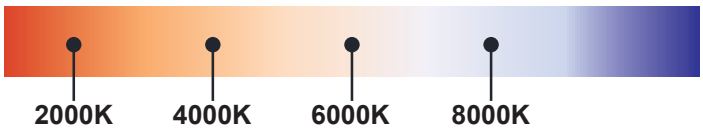

Bollard light

IP65

Rated power	12W	Power Factor	> 0.9
LED Quantity	1pcs	Life	> 50000H
Color Temperature	6000k/4000k/3000k	THD	< 15%
Luminous Flux	1100lm	Frequency Range	50/60HZ
Input Voltage	AC100~277V	Lnstallation Pipe Diameter	/
Protection Grade	IP65	CRI	> 90
Operating Temperature	-30~50℃		

DM-BC47a

Standard colours

9004 9006 9007 9016

Bollard light

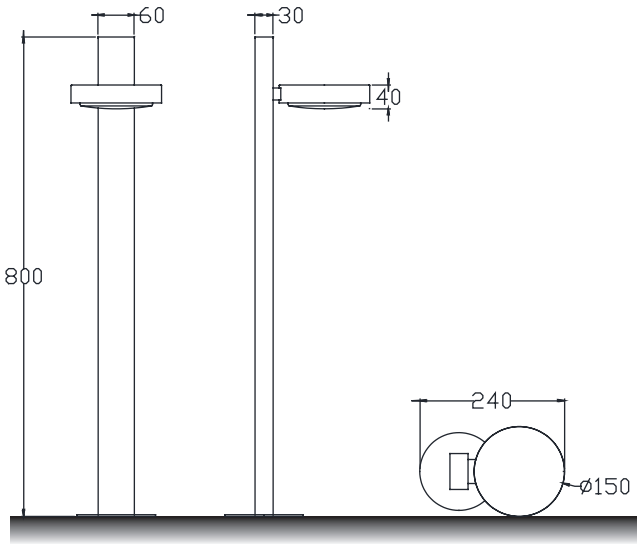

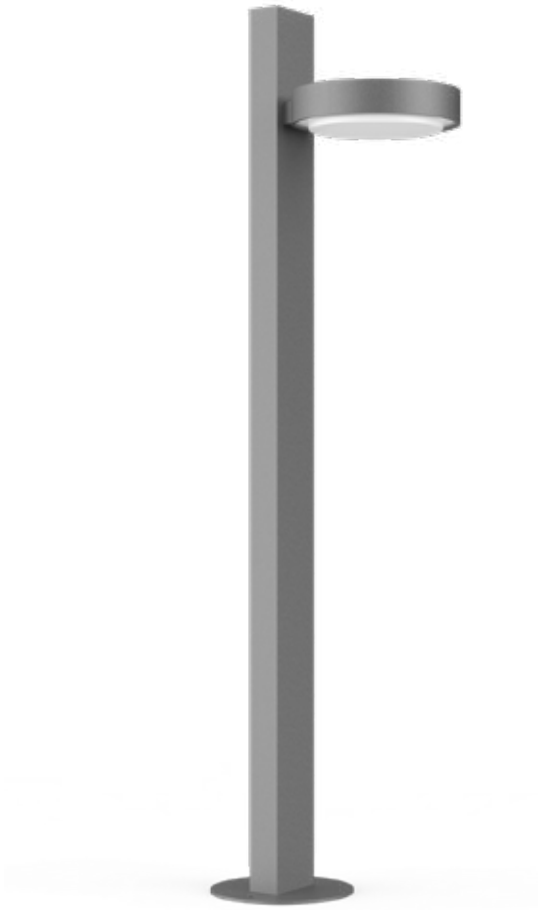

Installation plate

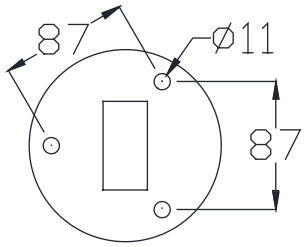

DM-BC48a

Colo(u)r temperature

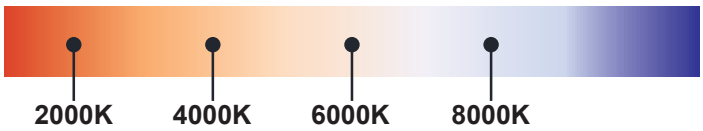

Bollard light

IP65

Rated power	12W	Power Factor	> 0.9
LED Quantity	1pcs	Life	> 50000H
Color Temperature	6000k/4000k/3000k	THD	< 15%
Luminous Flux	1100lm	Frequency Range	50/60HZ
Input Voltage	AC100~277V	Lnstallation Pipe Diameter	/
Protection Grade	IP65	CRI	> 90
Operating Temperature	-30~50℃		

DM-BC48a

Standard colours

9004 9006 9007 9016

Bollard light

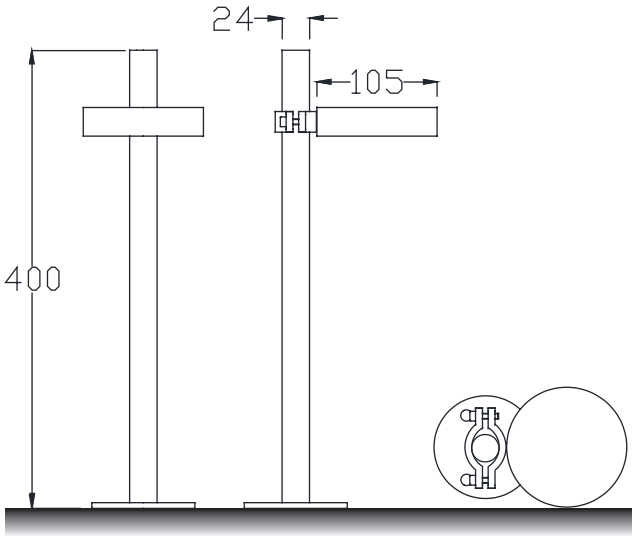

Installation plate

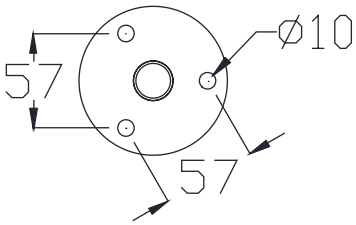

DM-BC49a

Colo(u)r temperature

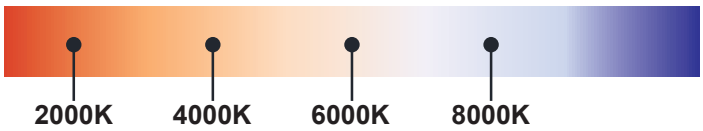

Bollard light

IP65

Rated power	12W	Power Factor	> 0.9
LED Quantity	1pcs	Life	> 50000H
Color Temperature	6000k/4000k/3000k	THD	< 15%
Luminous Flux	1100lm	Frequency Range	50/60HZ
Input Voltage	AC100~277V	Lnstallation Pipe Diameter	/
Protection Grade	IP65	CRI	> 90
Operating Temperature	-30~50℃		

DM-BC49a

Standard colours

9004 9006 9007 9016

Bollard light

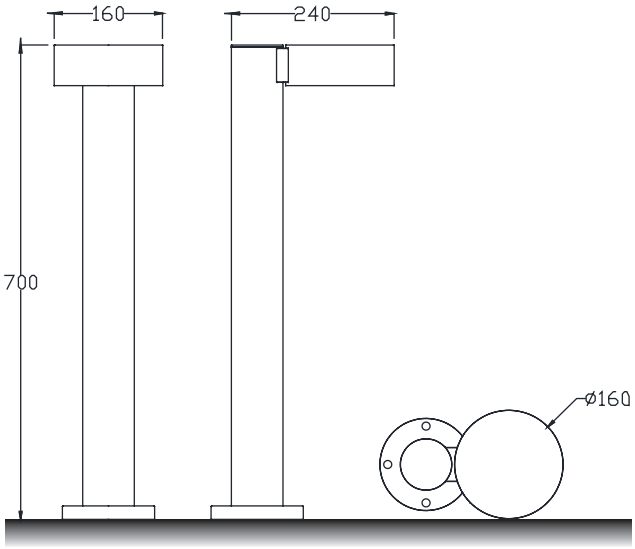

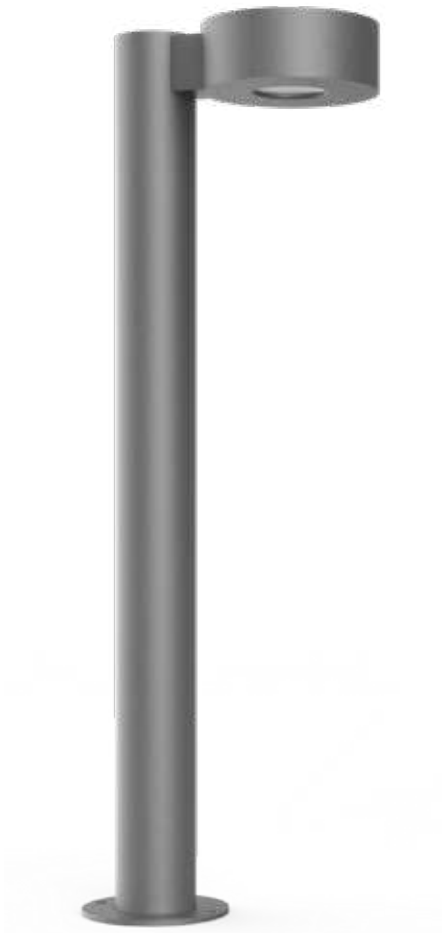

Installation plate

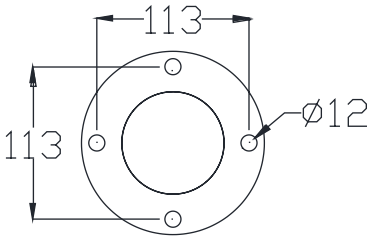

DM-BC50a

Colo(u)r temperature

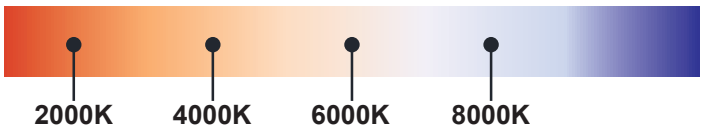

Bollard light

IP65

Rated power	12W	Power Factor	> 0.9
LED Quantity	1pcs	Life	> 50000H
Color Temperature	6000k/4000k/3000k	THD	< 15%
Luminous Flux	1100lm	Frequency Range	50/60HZ
Input Voltage	AC100~277V	Lnstallation Pipe Diameter	/
Protection Grade	IP65	CRI	> 90
Operating Temperature	-30~50℃		

DM-BC50a

Standard colours

9004 9006 9007 9016

Bollard light

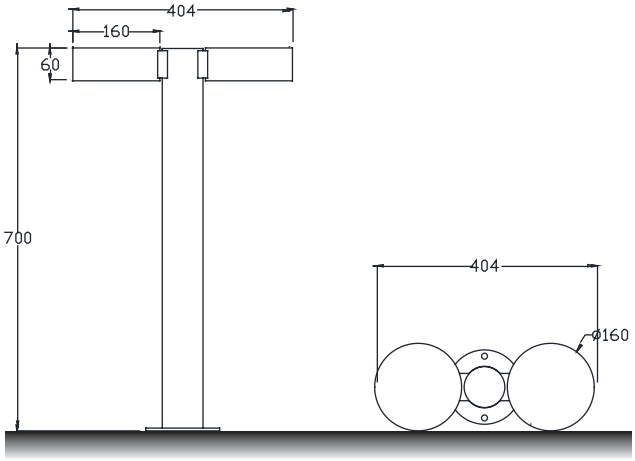

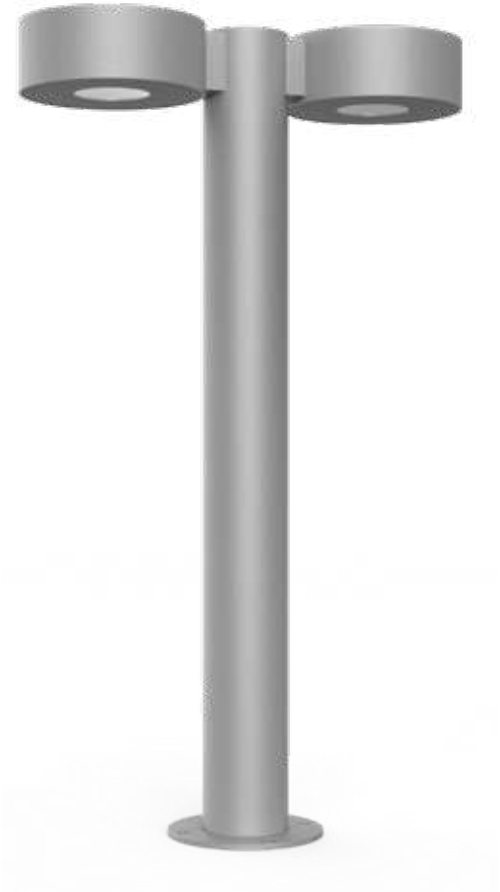

Installation plate

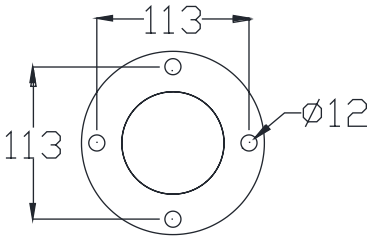

DM-BC51a

Colo(u)r temperature

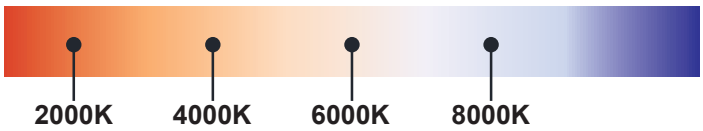

Bollard light

IP65

Rated power	12W	Power Factor	> 0.9
LED Quantity	1pcs	Life	> 50000H
Color Temperature	6000k/4000k/3000k	THD	< 15%
Luminous Flux	1100lm	Frequency Range	50/60HZ
Input Voltage	AC100~277V	Lnstallation Pipe Diameter	/
Protection Grade	IP65	CRI	> 90
Operating Temperature	-30~50℃		

DM-BC51a

Standard colours

9004 9006 9007 9016

Bollard light

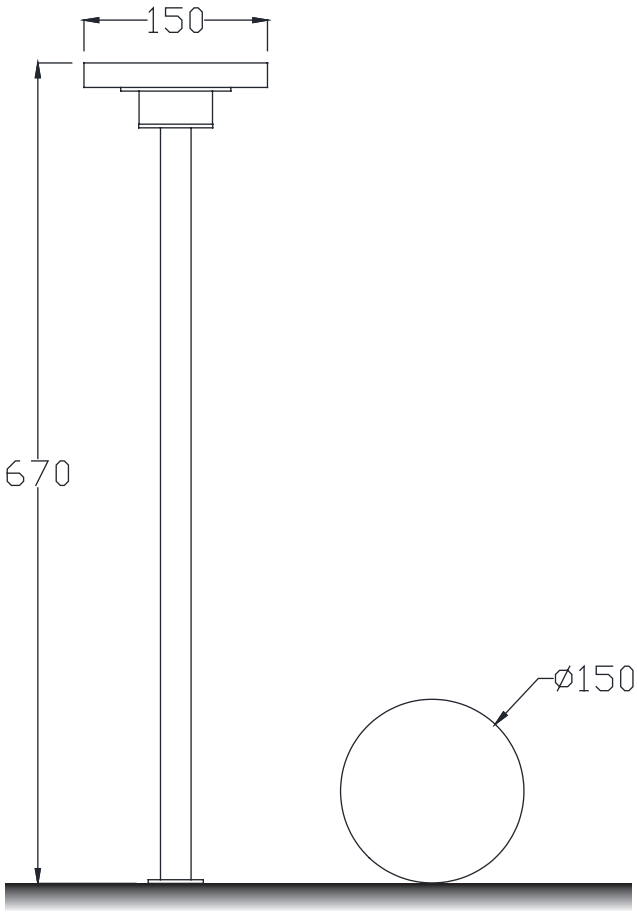

Installation plate

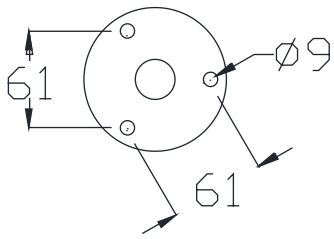

DM-BC52a

Colo(u)r temperature

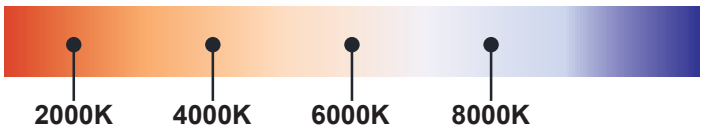

Bollard light

IP65

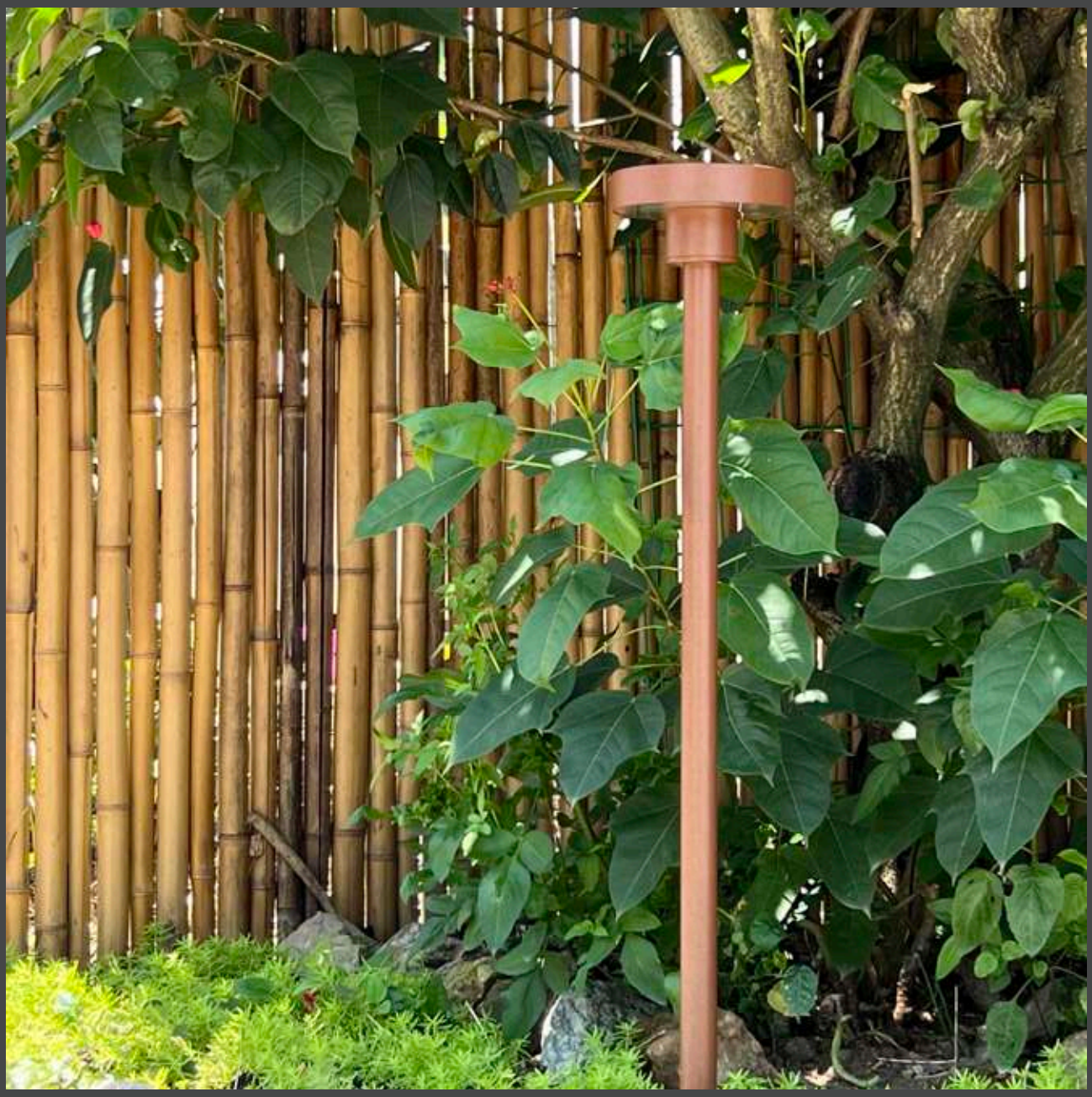

Rated power	12W	Power Factor	> 0.9
LED Quantity	1pcs	Life	> 50000H
Color Temperature	6000k/4000k/3000k	THD	< 15%
Luminous Flux	1100lm	Frequency Range	50/60HZ
Input Voltage	AC100~277V	Lnstallation Pipe Diameter	/
Protection Grade	IP65	CRI	> 90
Operating Temperature	-30~50℃		

DM-BC52a

Standard colours

9004 9006 9007 9016

Bollard light

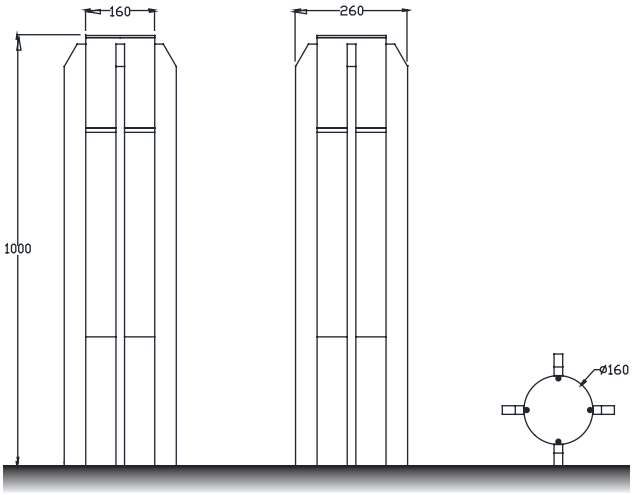

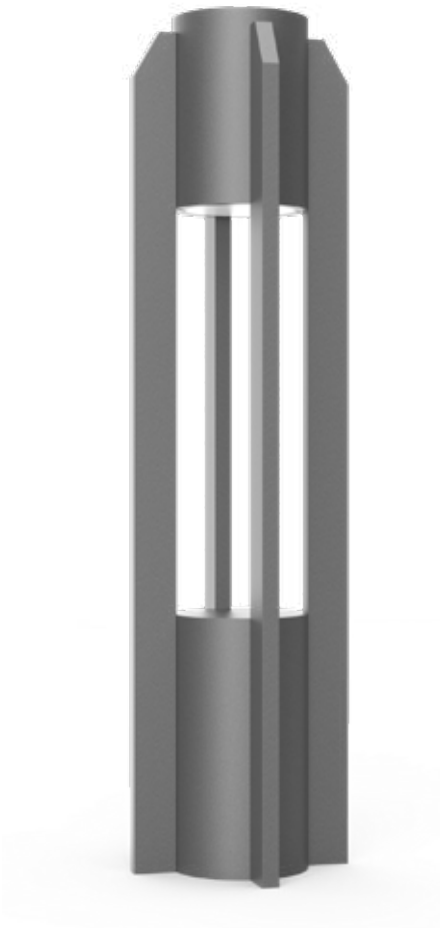

Installation plate

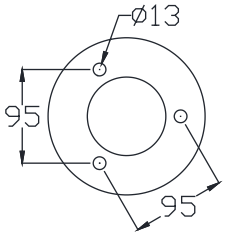

DM-BC53a

Colo(u)r temperature

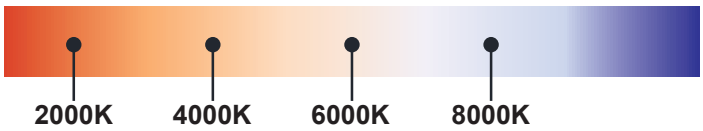

Bollard light

IP65

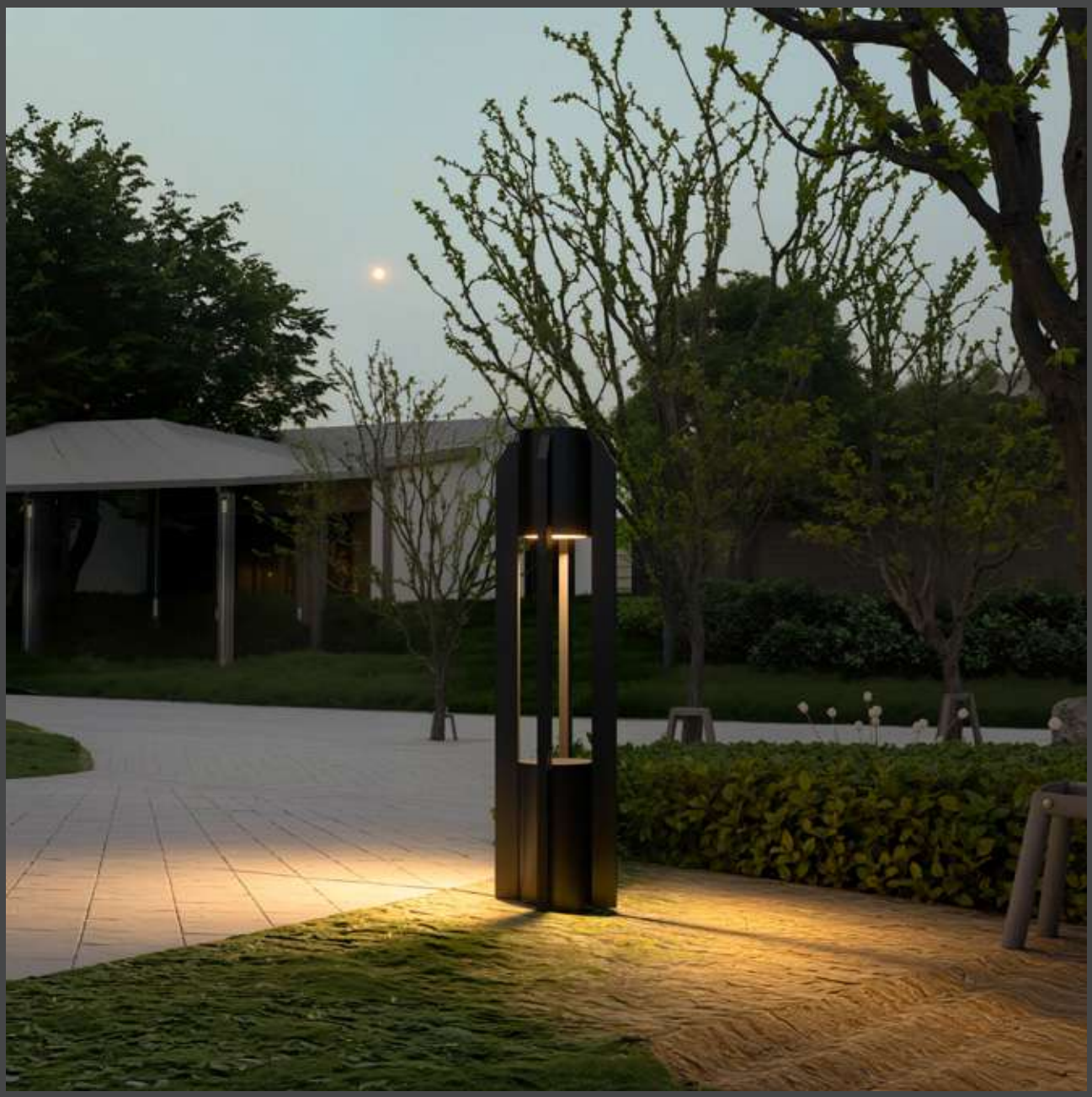

Rated power	12W	Power Factor	> 0.9
LED Quantity	1pcs	Life	> 50000H
Color Temperature	6000k/4000k/3000k	THD	< 15%
Luminous Flux	1100lm	Frequency Range	50/60HZ
Input Voltage	AC100~277V	Lnstallation Pipe Diameter	/
Protection Grade	IP65	CRI	> 90
Operating Temperature	-30~50℃		

DM-BC53a

Standard colours

9004 9006 9007 9016

Bollard light

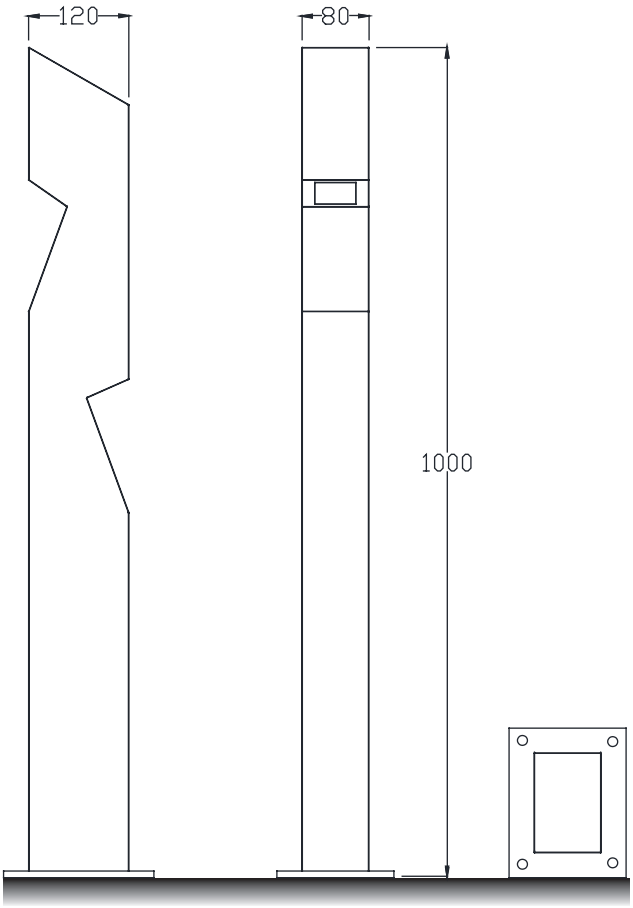

Installation plate

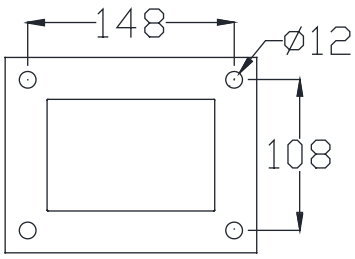

DM-BC54a

Colo(u)r temperature

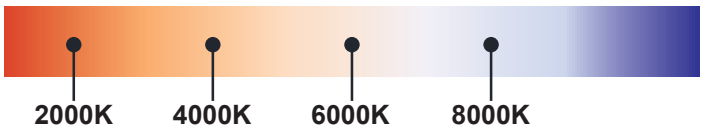

Bollard light

IP65

Rated power	12W	Power Factor	> 0.9
LED Quantity	1pcs	Life	> 50000H
Color Temperature	6000k/4000k/3000k	THD	< 15%
Luminous Flux	1100lm	Frequency Range	50/60HZ
Input Voltage	AC100~277V	Lnstallation Pipe Diameter	/
Protection Grade	IP65	CRI	> 90
Operating Temperature	-30~50℃		

DM-BC54a

Standard colours

9004 9006 9007 9016

Bollard light

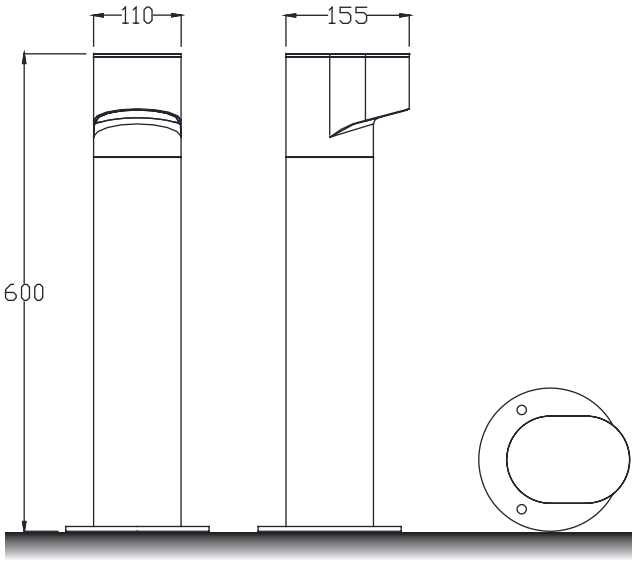

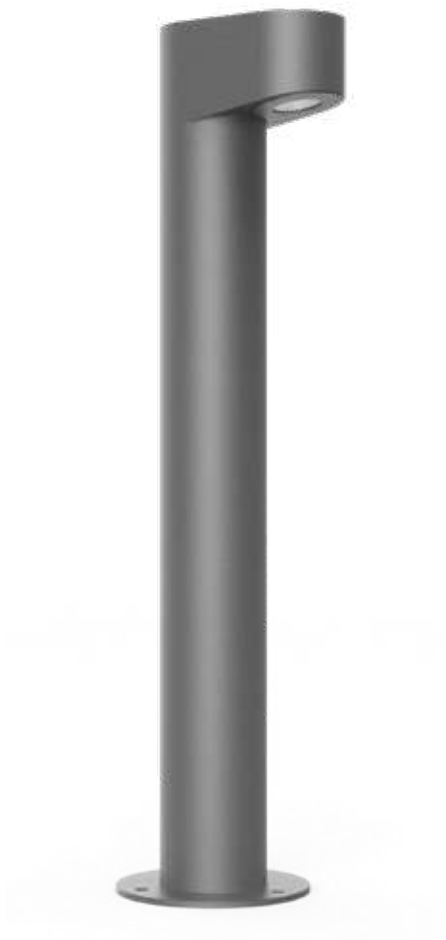

Installation plate

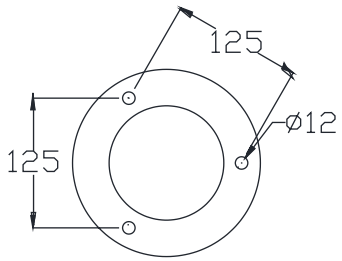

DM-BC55a

Colo(u)r temperature

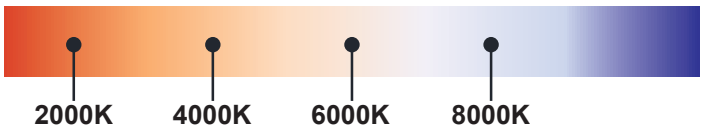

Bollard light

IP65

Rated power	12W	Power Factor	> 0.9
LED Quantity	1pcs	Life	> 50000H
Color Temperature	6000k/4000k/3000k	THD	< 15%
Luminous Flux	1100lm	Frequency Range	50/60HZ
Input Voltage	AC100~277V	Lnstallation Pipe Diameter	/
Protection Grade	IP65	CRI	> 90
Operating Temperature	-30~50℃		

DM-BC55a

Standard colours

9004 9006 9007 9016

Bollard light

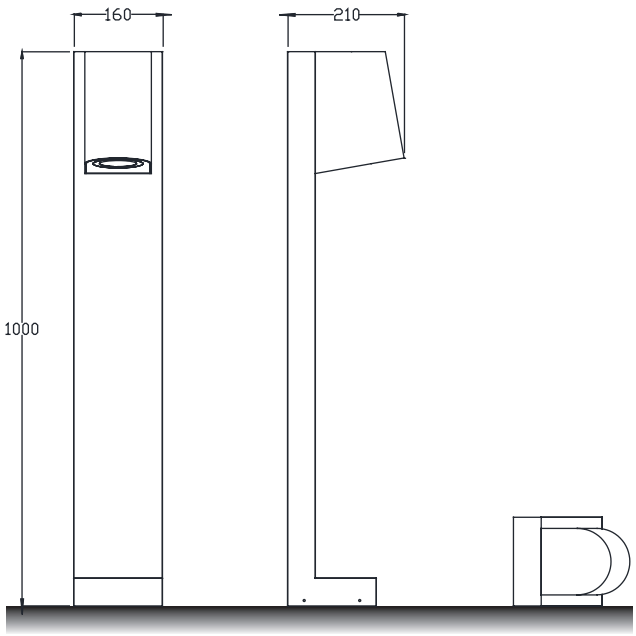

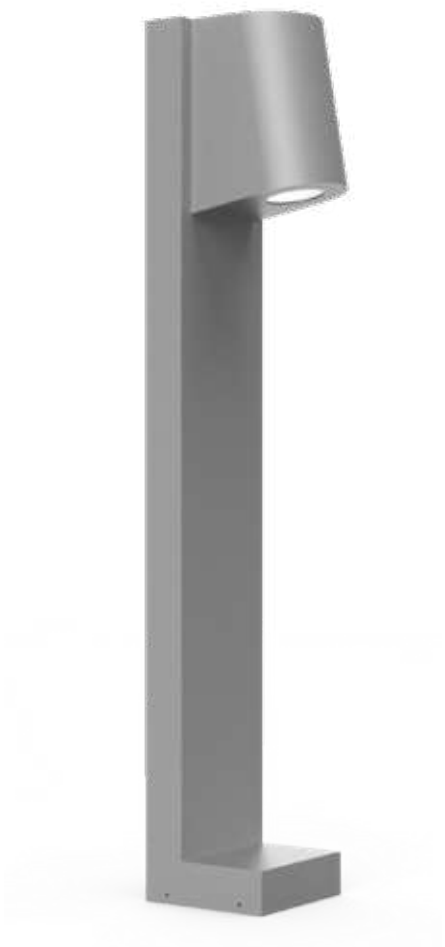

Installation plate

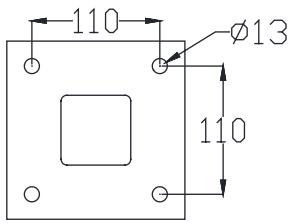

DM-BC56a

Colo(u)r temperature

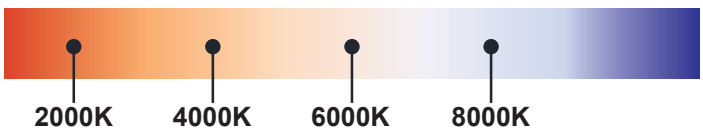

Bollard light

IP65

Rated power	12W	Power Factor	> 0.9
LED Quantity	1pcs	Life	> 50000H
Color Temperature	6000k/4000k/3000k	THD	< 15%
Luminous Flux	1100lm	Frequency Range	50/60HZ
Input Voltage	AC100~277V	Lnstallation Pipe Diameter	/
Protection Grade	IP65	CRI	> 90
Operating Temperature	-30~50℃		

DM-BC56a

Standard colours

9004 9006 9007 9016

Bollard light

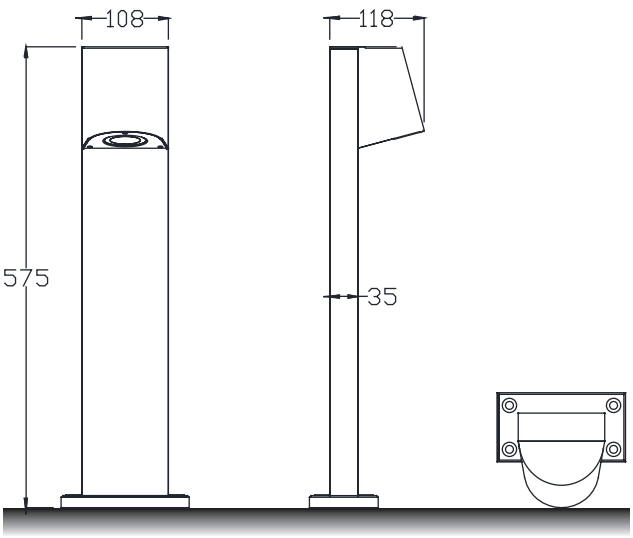

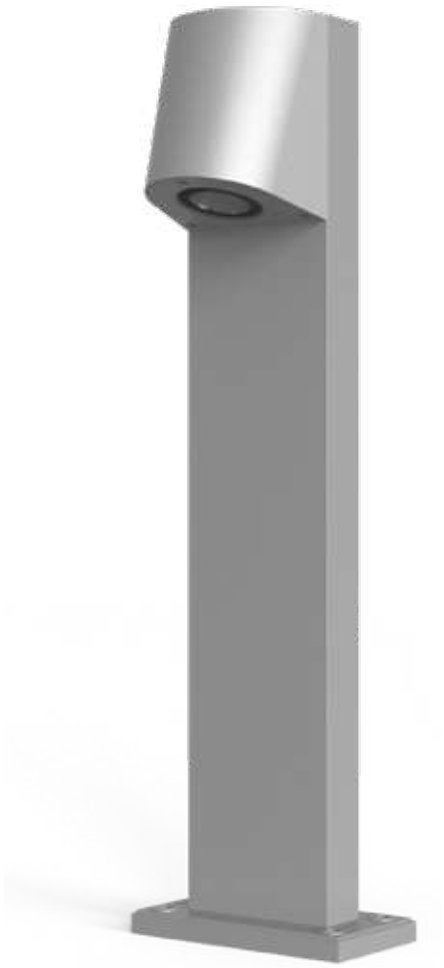

Installation plate

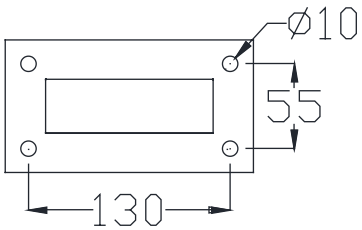

DM-BC57a

Colo(u)r temperature

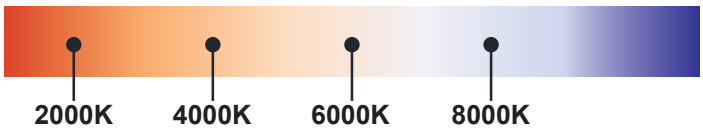

Bollard light

IP65

Rated power	12W	Power Factor	> 0.9
LED Quantity	1pcs	Life	> 50000H
Color Temperature	6000k/4000k/3000k	THD	< 15%
Luminous Flux	1100lm	Frequency Range	50/60HZ
Input Voltage	AC100~277V	Lnstallation Pipe Diameter	/
Protection Grade	IP65	CRI	> 90
Operating Temperature	-30~50℃		

DM-BC57a

Standard colours

9004 9006 9007 9016

Bollard light

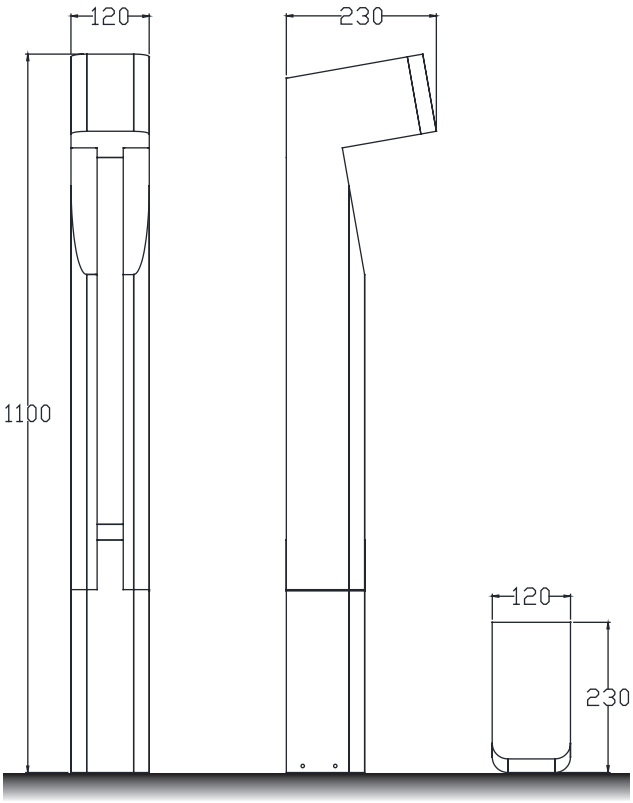

Installation plate

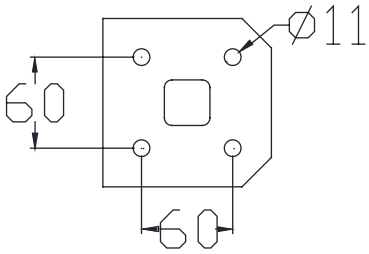

DM-BC58a

Colo(u)r temperature

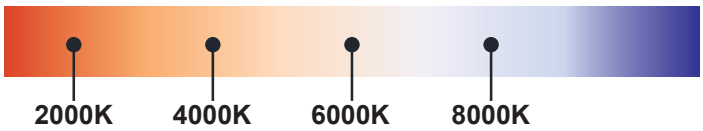

Bollard light

IP65

Rated power	12W	Power Factor	> 0.9
LED Quantity	1pcs	Life	> 50000H
Color Temperature	6000k/4000k/3000k	THD	< 15%
Luminous Flux	1100lm	Frequency Range	50/60HZ
Input Voltage	AC100~277V	Lnstallation Pipe Diameter	/
Protection Grade	IP65	CRI	> 90
Operating Temperature	-30~50℃		

DM-BC58a

Standard colours

9004 9006 9007 9016

Bollard light

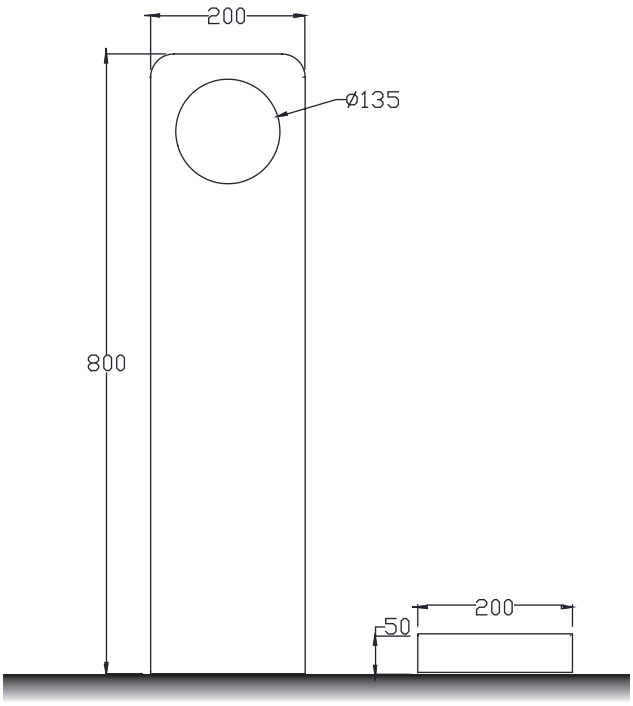

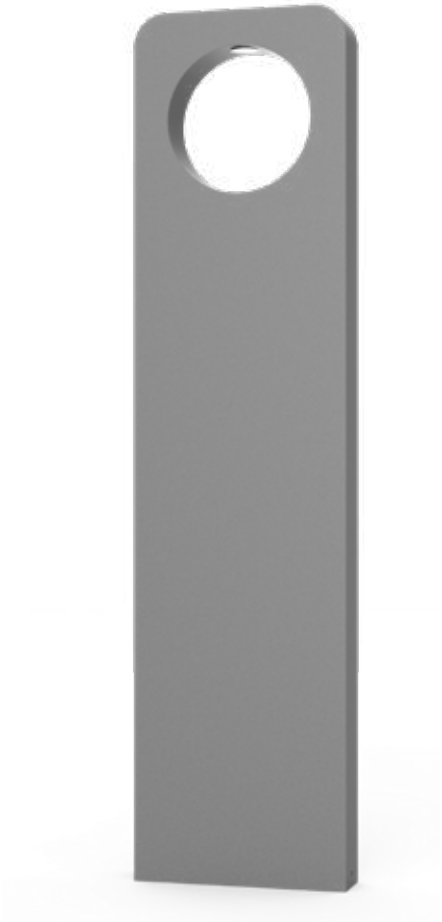

Installation plate

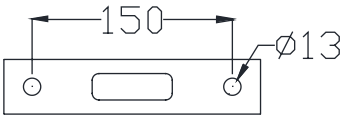

DM-BC59a

Colo(u)r temperature

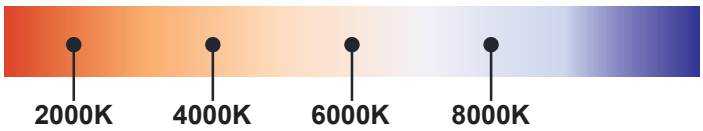

Bollard light

IP65

Rated power	12W	Power Factor	> 0.9
LED Quantity	1pcs	Life	> 50000H
Color Temperature	6000k/4000k/3000k	THD	< 15%
Luminous Flux	1100lm	Frequency Range	50/60HZ
Input Voltage	AC100~277V	Lnstallation Pipe Diameter	/
Protection Grade	IP65	CRI	> 90
Operating Temperature	-30~50℃		

DM-BC59a

Standard colours

9004 9006 9007 9016

Bollard light

Installation plate

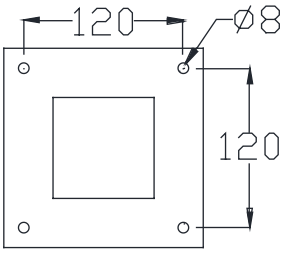

DM-BC60a

Colo(u)r temperature

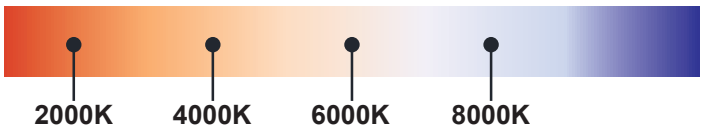

Bollard light

IP65

Rated power	12W	Power Factor	> 0.9
LED Quantity	1pcs	Life	> 50000H
Color Temperature	6000k/4000k/3000k	THD	< 15%
Luminous Flux	1100lm	Frequency Range	50/60HZ
Input Voltage	AC100~277V	Lnstallation Pipe Diameter	/
Protection Grade	IP65	CRI	> 90
Operating Temperature	-30~50℃		

DM-BC60a

Standard colours

9004 9006 9007 9016

Bollard light

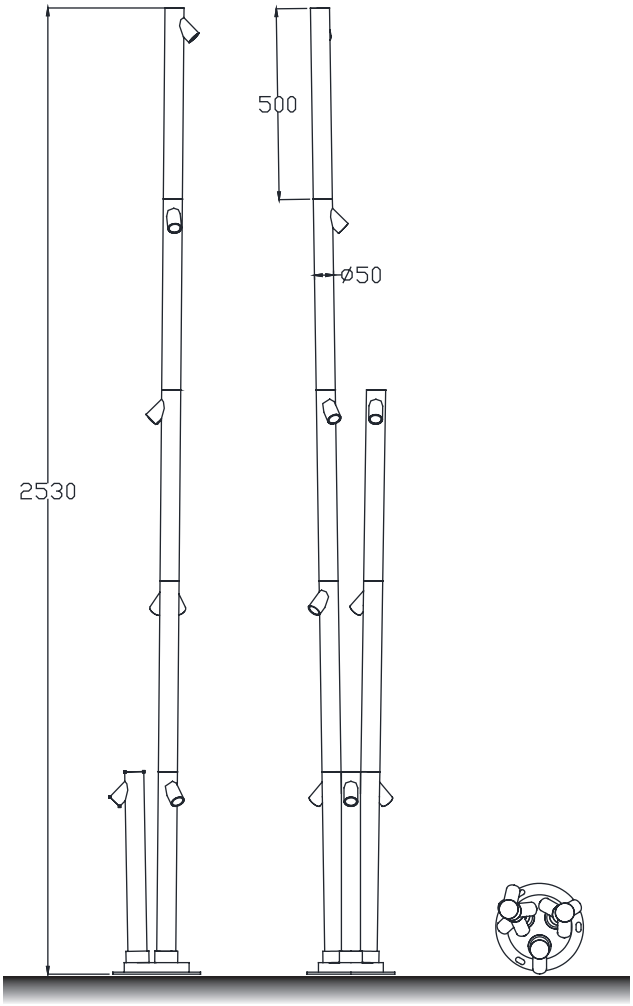

Installation plate

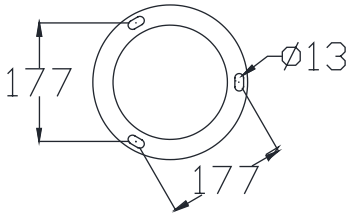

DM-BC61a

Colo(u)r temperature

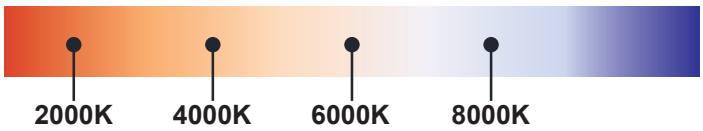

Bollard light

IP65

Rated power	12W	Power Factor	> 0.9
LED Quantity	1pcs	Life	> 50000H
Color Temperature	6000k/4000k/3000k	THD	< 15%
Luminous Flux	1100lm	Frequency Range	50/60HZ
Input Voltage	AC100~277V	Lnstallation Pipe Diameter	/
Protection Grade	IP65	CRI	> 90
Operating Temperature	-30~50℃		

DM-BC61a

Standard colours

9004 9006 9007 9016

Bollard light

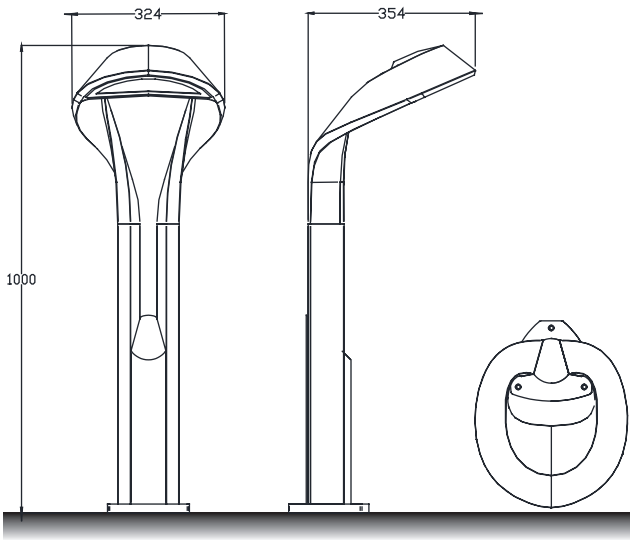

Installation plate

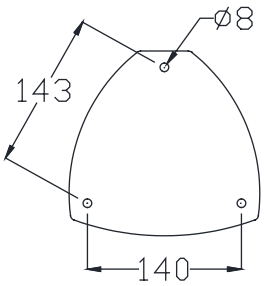

DM-BC62a

Colo(u)r temperature

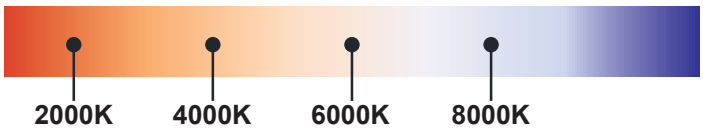

Bollard light

IP65

Rated power	12W	Power Factor	> 0.9
LED Quantity	1pcs	Life	> 50000H
Color Temperature	6000k/4000k/3000k	THD	< 15%
Luminous Flux	1100lm	Frequency Range	50/60HZ
Input Voltage	AC100~277V	Lnstallation Pipe Diameter	/
Protection Grade	IP65	CRI	> 90
Operating Temperature	-30~50℃		

DM-BC62a

Standard colours

9004 9006 9007 9016

Bollard light

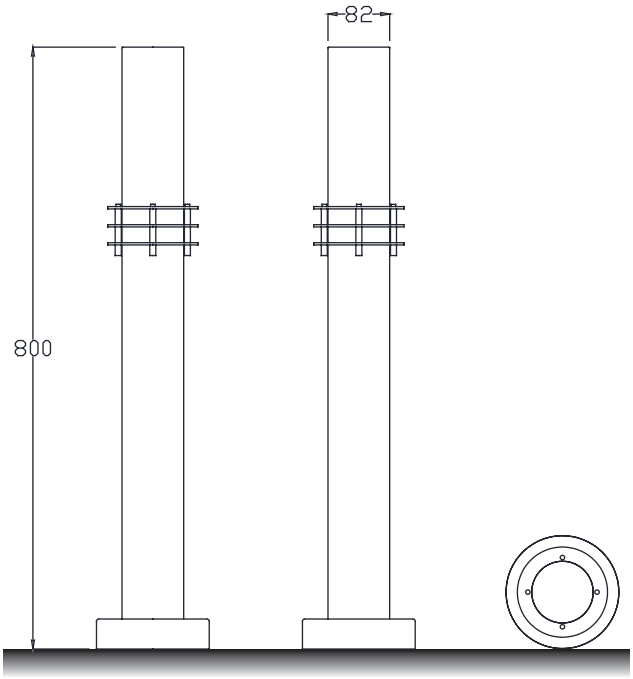

Installation plate

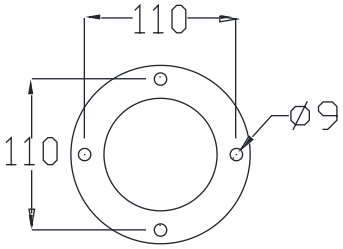

DM-BC63a

Colo(u)r temperature

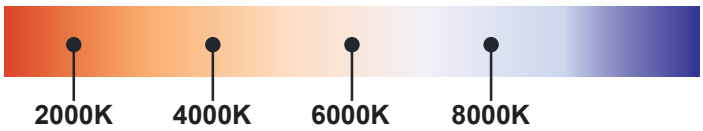

Bollard light

IP65

Rated power	12W	Power Factor	> 0.9
LED Quantity	1pcs	Life	> 50000H
Color Temperature	6000k/4000k/3000k	THD	< 15%
Luminous Flux	1100lm	Frequency Range	50/60HZ
Input Voltage	AC100~277V	Lnstallation Pipe Diameter	/
Protection Grade	IP65	CRI	> 90
Operating Temperature	-30~50℃		

DM-BC63a

Standard colours

9004 9006 9007 9016

Bollard light

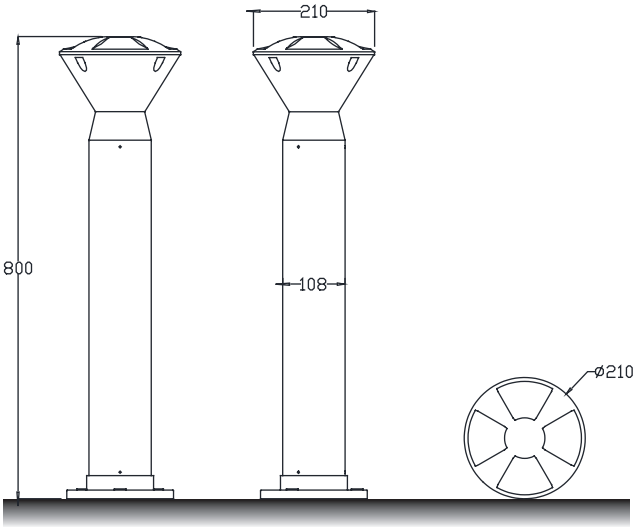

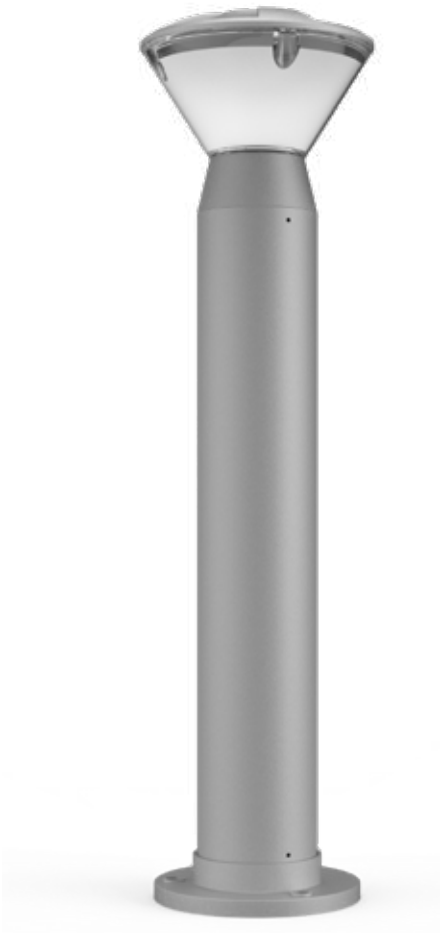

Installation plate

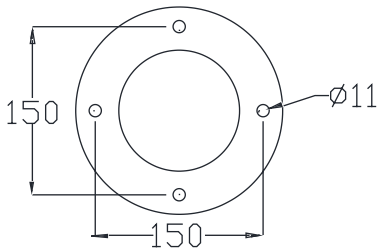

DM-BC64a

Colo(u)r temperature

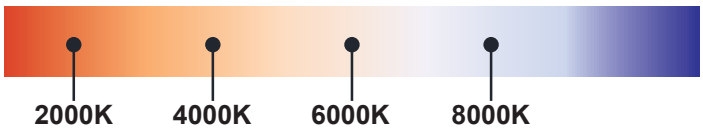

Bollard light

IP65

Rated power	12W	Power Factor	> 0.9
LED Quantity	1pcs	Life	> 50000H
Color Temperature	6000k/4000k/3000k	THD	< 15%
Luminous Flux	1100lm	Frequency Range	50/60HZ
Input Voltage	AC100~277V	Lnstallation Pipe Diameter	/
Protection Grade	IP65	CRI	> 90
Operating Temperature	-30~50℃		

DM-BC64a

Standard colours

9004 9006 9007 9016

Bollard light

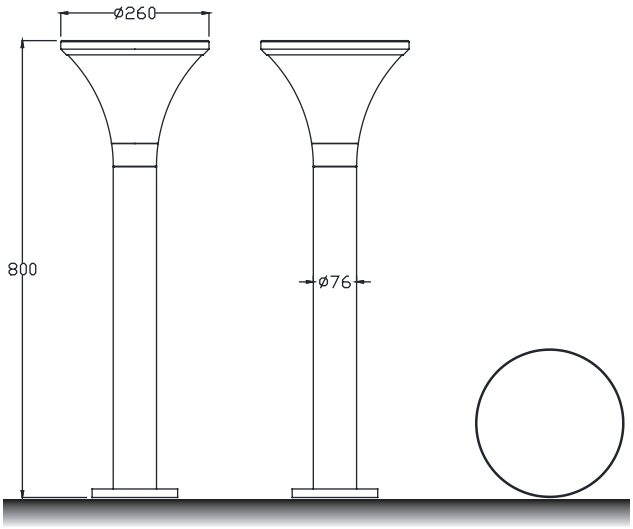

Installation plate

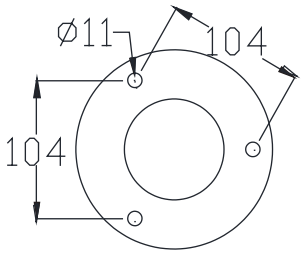

DM-BC65a

Colo(u)r temperature

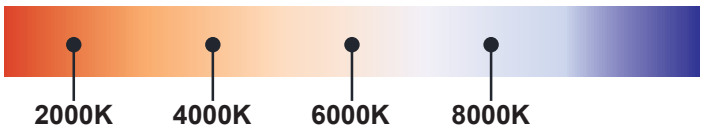

Bollard light

IP65

Rated power	12W	Power Factor	> 0.9
LED Quantity	1pcs	Life	> 50000H
Color Temperature	6000k/4000k/3000k	THD	< 15%
Luminous Flux	1100lm	Frequency Range	50/60HZ
Input Voltage	AC100~277V	Lnstallation Pipe Diameter	/
Protection Grade	IP65	CRI	> 90
Operating Temperature	-30~50℃		

DM-BC65a

Standard colours

9004 9006 9007 9016

Bollard light

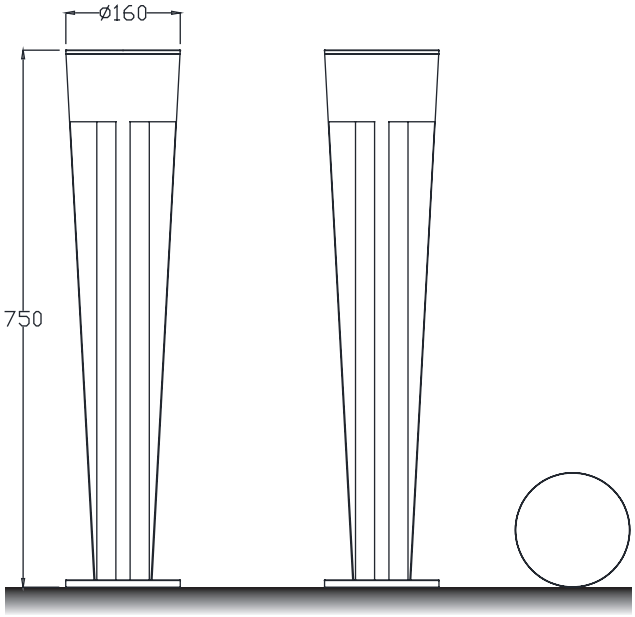

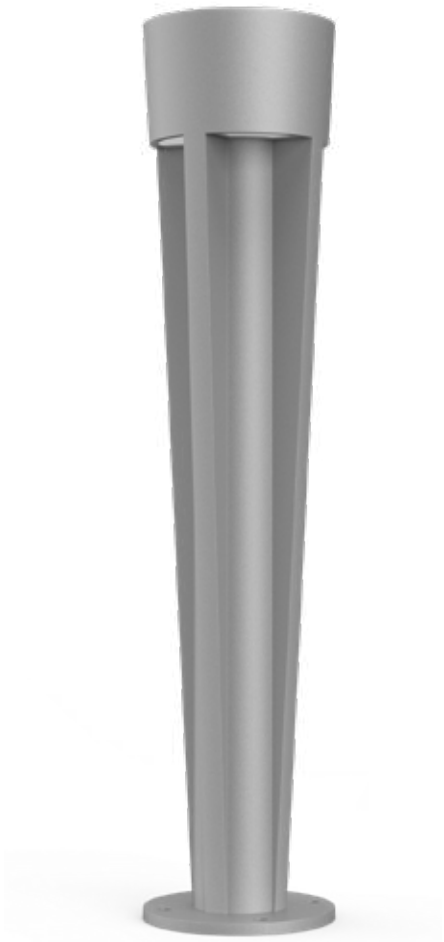

Installation plate

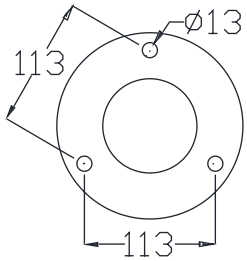

DM-BC66a

Colo(u)r temperature

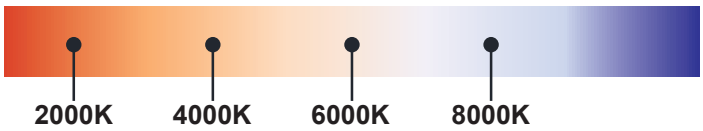

Bollard light

IP65

Rated power	12W	Power Factor	> 0.9
LED Quantity	1pcs	Life	> 50000H
Color Temperature	6000k/4000k/3000k	THD	< 15%
Luminous Flux	1100lm	Frequency Range	50/60HZ
Input Voltage	AC100~277V	Lnstallation Pipe Diameter	/
Protection Grade	IP65	CRI	> 90
Operating Temperature	-30~50℃		

DM-BC66a

Standard colours

9004 9006 9007 9016

Bollard light

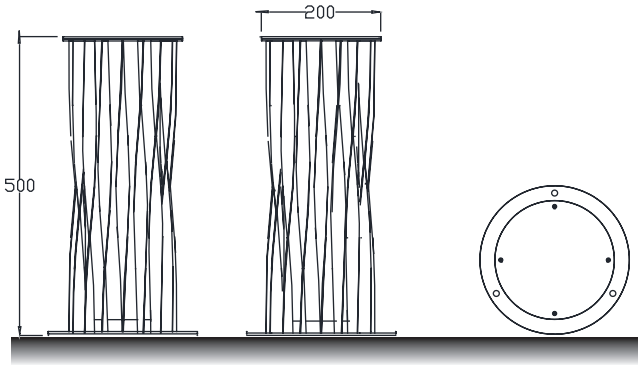

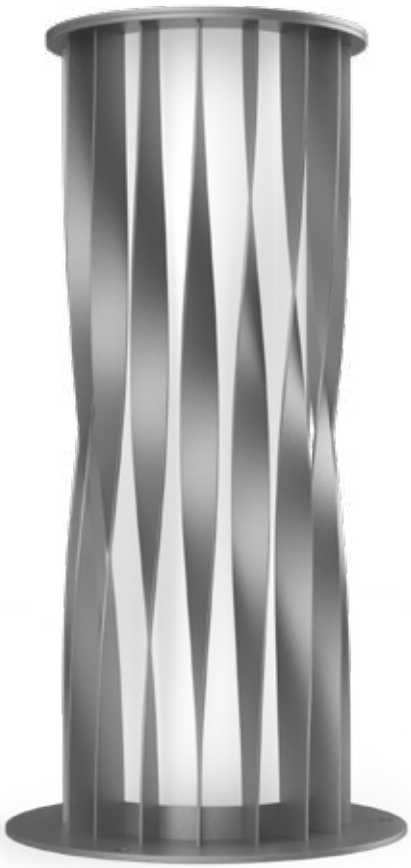

Installation plate

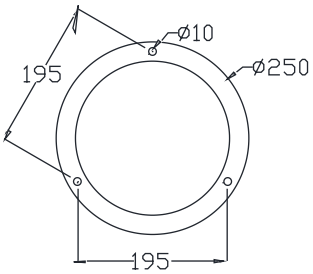

DM-BC67a

Colo(u)r temperature

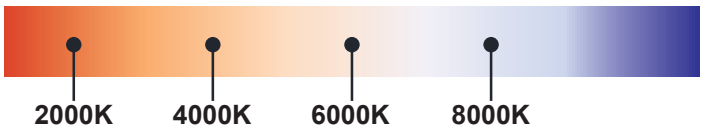

Bollard light

IP65

Rated power	12W	Power Factor	> 0.9
LED Quantity	1pcs	Life	> 50000H
Color Temperature	6000k/4000k/3000k	THD	< 15%
Luminous Flux	1100lm	Frequency Range	50/60HZ
Input Voltage	AC100~277V	Lnstallation Pipe Diameter	/
Protection Grade	IP65	CRI	> 90
Operating Temperature	-30~50℃		

DM-BC67a

Standard colours

9004 9006 9007 9016

Bollard light

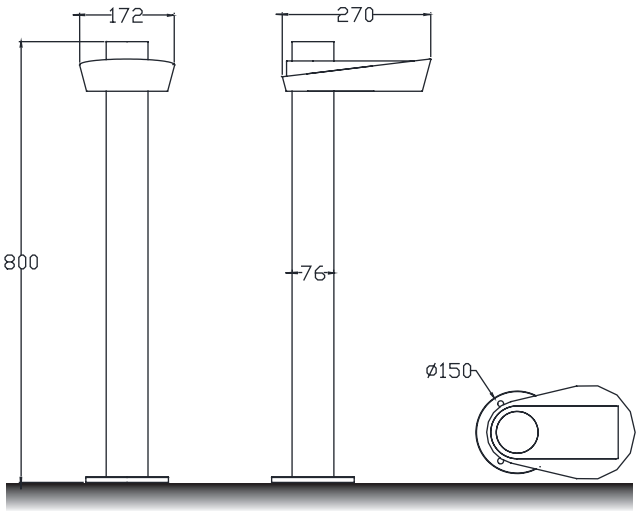

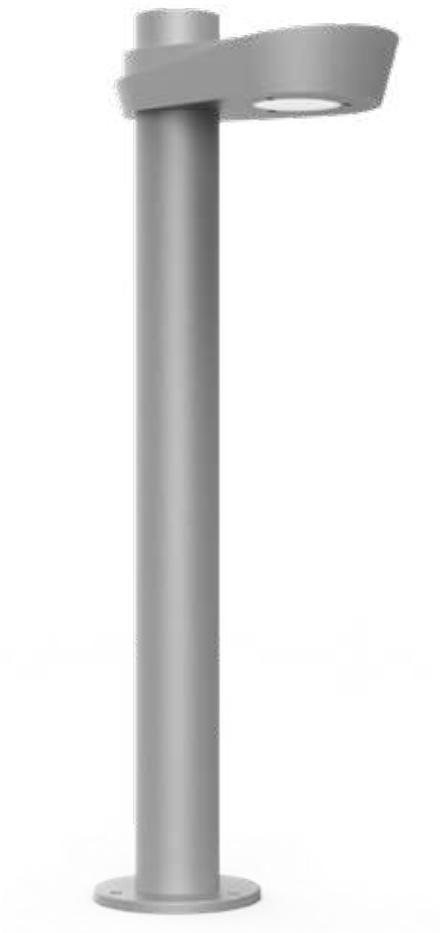

Installation plate

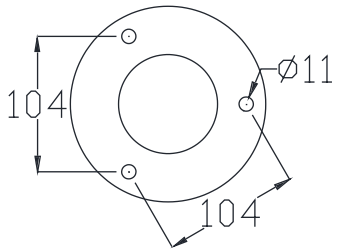

DM-BC68a

Colo(u)r temperature

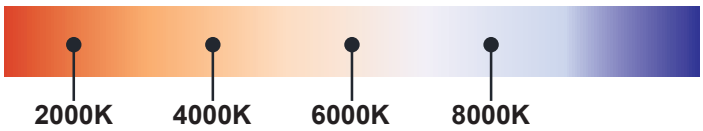

Bollard light

IP65

Rated power	12W	Power Factor	> 0.9
LED Quantity	1pcs	Life	> 50000H
Color Temperature	6000k/4000k/3000k	THD	< 15%
Luminous Flux	1100lm	Frequency Range	50/60HZ
Input Voltage	AC100~277V	Lnstallation Pipe Diameter	/
Protection Grade	IP65	CRI	> 90
Operating Temperature	-30~50℃		

DM-BC68a

Standard colours

9004 9006 9007 9016

Bollard light

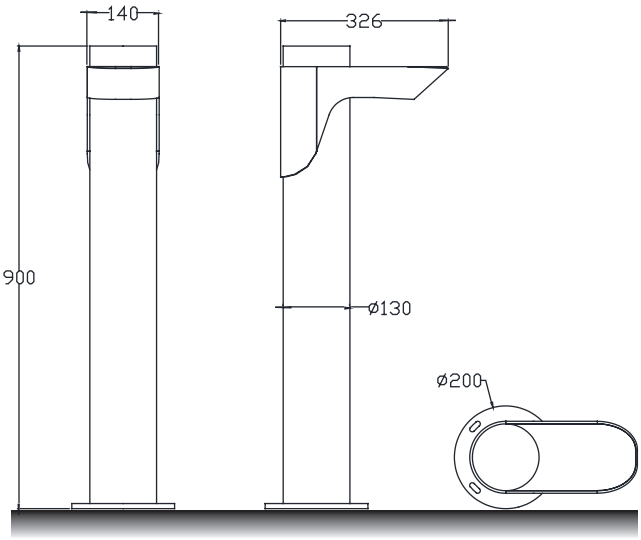

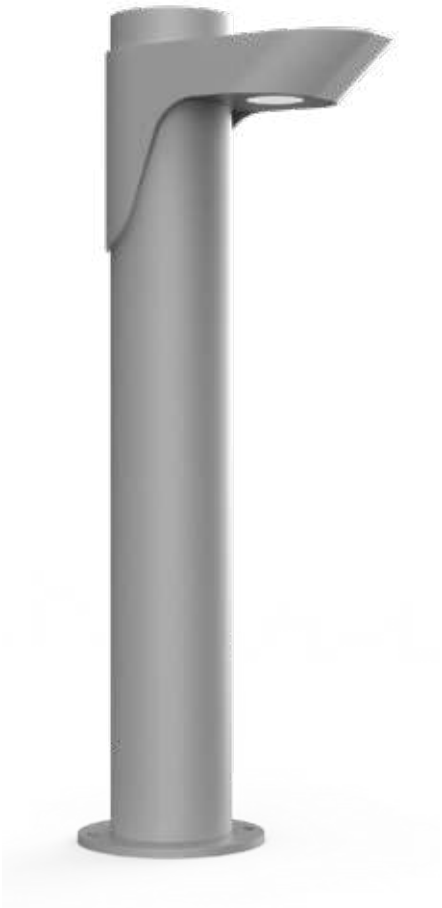

Installation plate

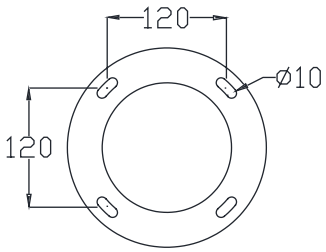

DM-BC69a

Colo(u)r temperature

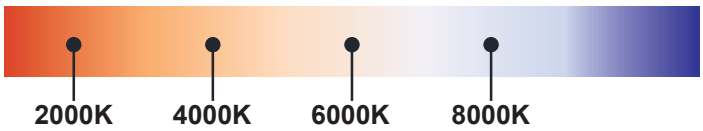

Bollard light

IP65

Rated power	12W	Power Factor	> 0.9
LED Quantity	1pcs	Life	> 50000H
Color Temperature	6000k/4000k/3000k	THD	< 15%
Luminous Flux	1100lm	Frequency Range	50/60HZ
Input Voltage	AC100~277V	Lnstallation Pipe Diameter	/
Protection Grade	IP65	CRI	> 90
Operating Temperature	-30~50℃		

DM-BC69a

Standard colours

9004 9006 9007 9016

Bollard light

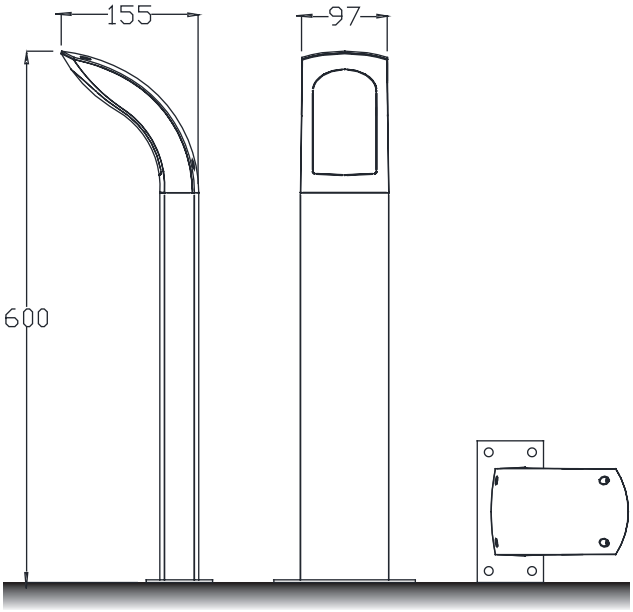

Installation plate

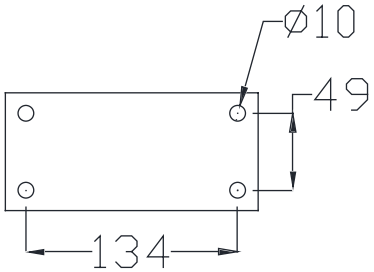

DM-BC70a

Colo(u)r temperature

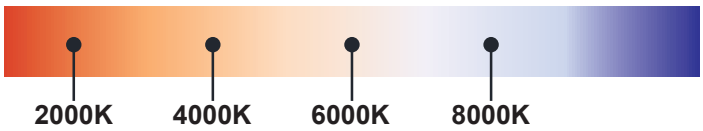

Bollard light

IP65

Rated power	12W	Power Factor	> 0.9
LED Quantity	1pcs	Life	> 50000H
Color Temperature	6000k/4000k/3000k	THD	< 15%
Luminous Flux	1100lm	Frequency Range	50/60HZ
Input Voltage	AC100~277V	Lnstallation Pipe Diameter	/
Protection Grade	IP65	CRI	> 90
Operating Temperature	-30~50℃		

DM-BC70a

Standard colours

9004 9006 9007 9016

Bollard light

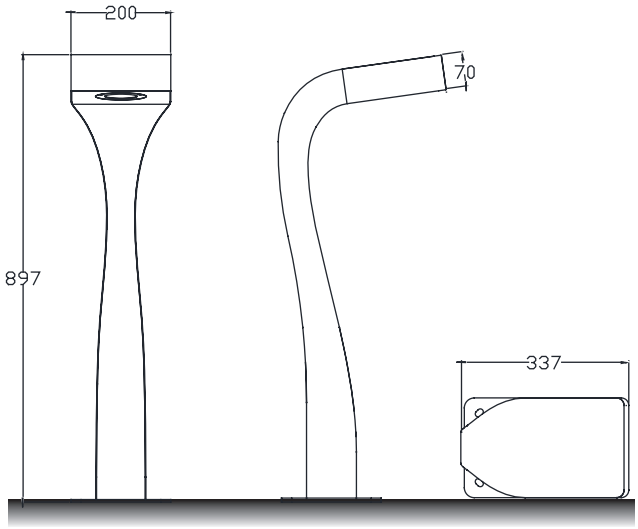

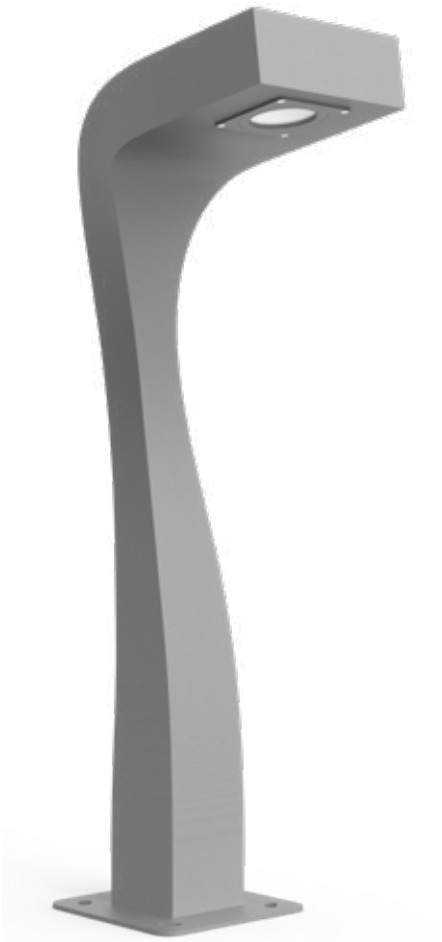

Installation plate

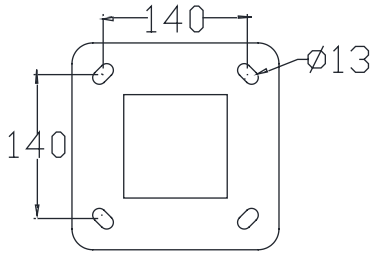

DM-BC71a

Colo(u)r temperature

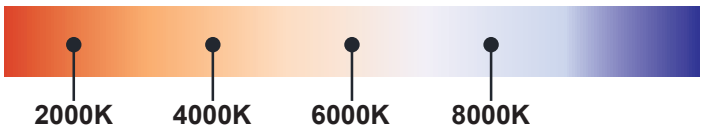

Bollard light

IP65

Rated power	12W	Power Factor	> 0.9
LED Quantity	1pcs	Life	> 50000H
Color Temperature	6000k/4000k/3000k	THD	< 15%
Luminous Flux	1100lm	Frequency Range	50/60HZ
Input Voltage	AC100~277V	Lnstallation Pipe Diameter	/
Protection Grade	IP65	CRI	> 90
Operating Temperature	-30~50℃		

DM-BC71a

Standard colours

9004 9006 9007 9016

Bollard light

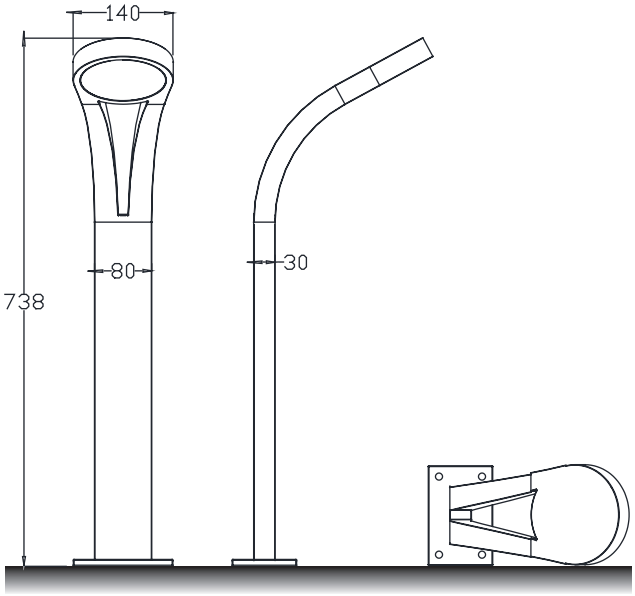

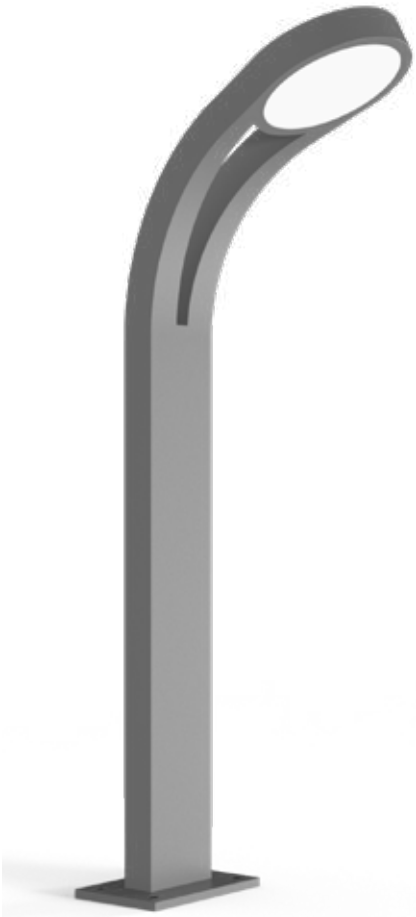

Installation plate

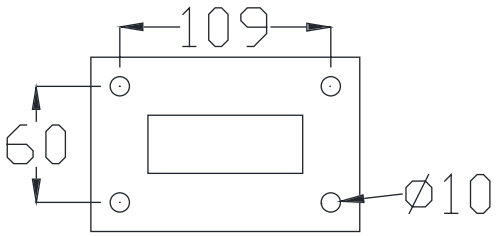

DM-BC72a

Colo(u)r temperature

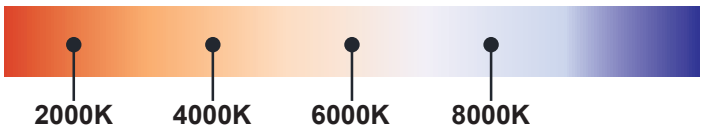

Bollard light

IP65

Rated power	12W	Power Factor	> 0.9
LED Quantity	1pcs	Life	> 50000H
Color Temperature	6000k/4000k/3000k	THD	< 15%
Luminous Flux	1100lm	Frequency Range	50/60HZ
Input Voltage	AC100~277V	Lnstallation Pipe Diameter	/
Protection Grade	IP65	CRI	> 90
Operating Temperature	-30~50℃		

DM-BC72a

Standard colours

9004 9006 9007 9016

Bollard light

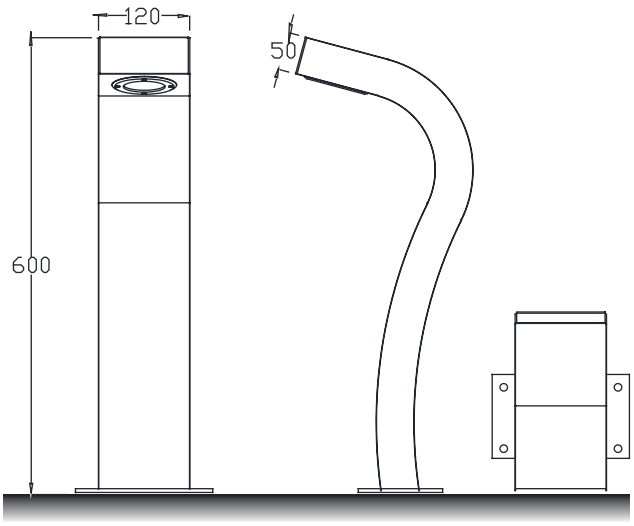

Installation plate

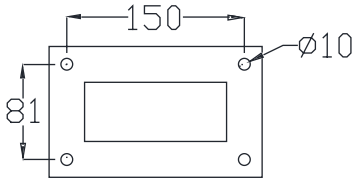

DM-CR73a

Colo(u)r temperature

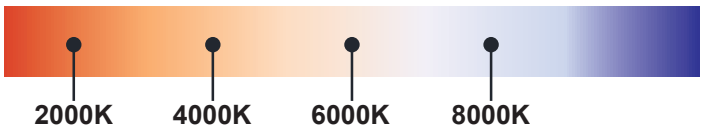

Bollard light

IP65

Rated power	12W	Power Factor	> 0.9
LED Quantity	1pcs	Life	> 50000H
Color Temperature	6000k/4000k/3000k	THD	< 15%
Luminous Flux	1100lm	Frequency Range	50/60HZ
Input Voltage	AC100~277V	Lnstallation Pipe Diameter	/
Protection Grade	IP65	CRI	> 90
Operating Temperature	-30~50℃		

DM-BC73a

Standard colours

9004 9006 9007 9016

Bollard light

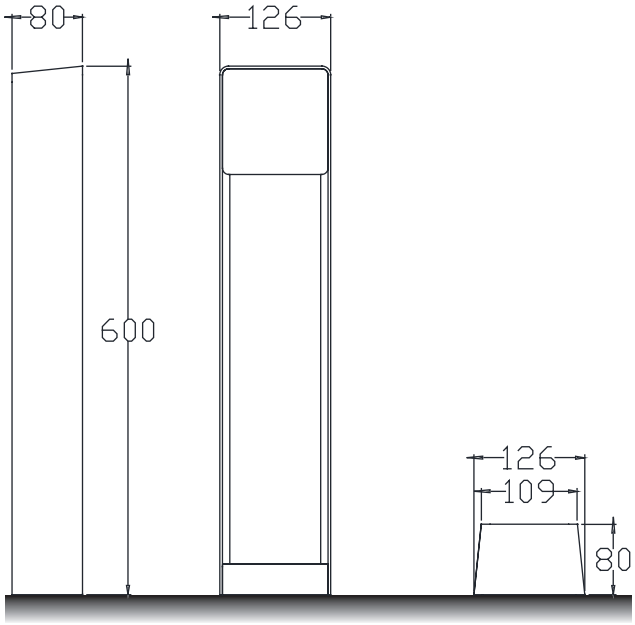

Installation plate

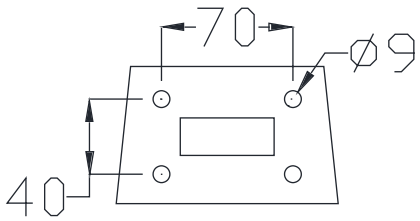

DM-BC74a

Colo(u)r temperature

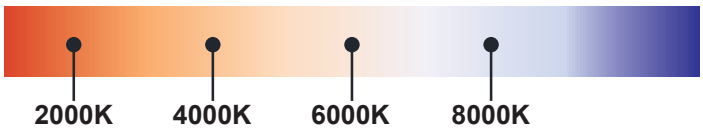

Bollard light

IP65

Rated power	12W	Power Factor	> 0.9
LED Quantity	1pcs	Life	> 50000H
Color Temperature	6000k/4000k/3000k	THD	< 15%
Luminous Flux	1100lm	Frequency Range	50/60HZ
Input Voltage	AC100~277V	Lnstallation Pipe Diameter	/
Protection Grade	IP65	CRI	> 90
Operating Temperature	-30~50℃		

DM-BC74a

Standard colours

9004 9006 9007 9016

Bollard light

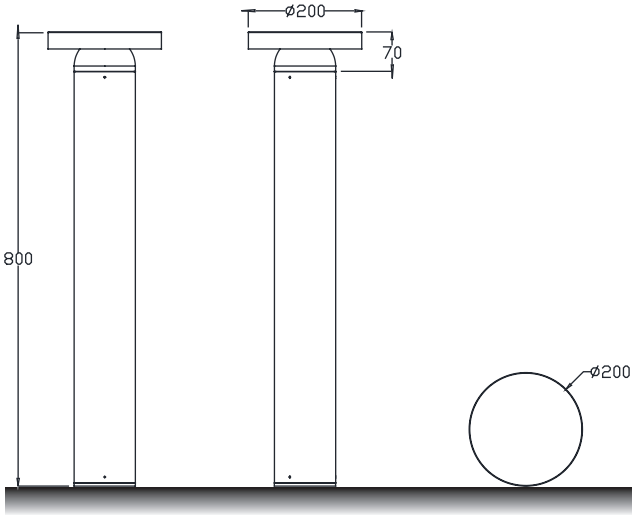

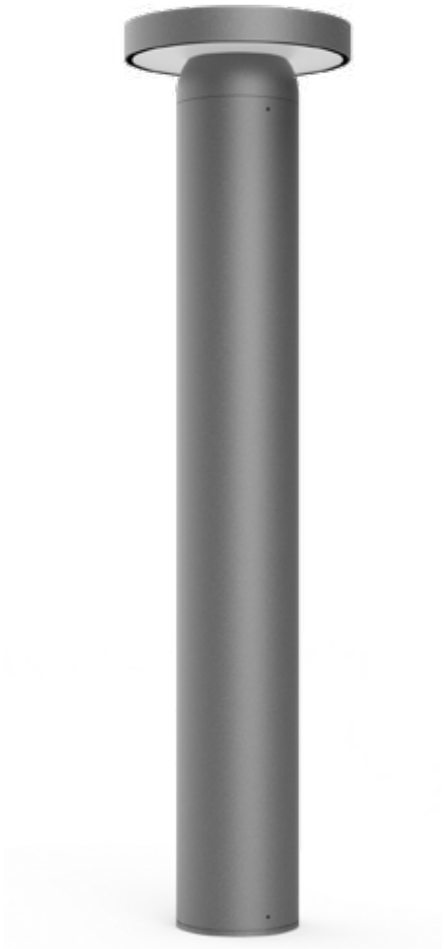

Installation plate

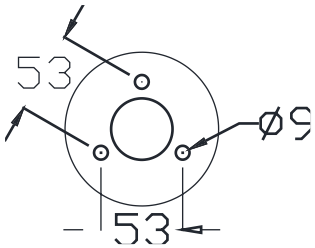

DM-BC75a

Colo(u)r temperature

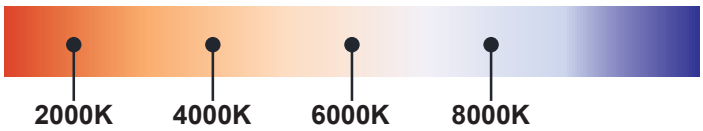

Bollard light

IP65

Rated power	12W	Power Factor	> 0.9
LED Quantity	1pcs	Life	> 50000H
Color Temperature	6000k/4000k/3000k	THD	< 15%
Luminous Flux	1100lm	Frequency Range	50/60HZ
Input Voltage	AC100~277V	Lnstallation Pipe Diameter	/
Protection Grade	IP65	CRI	> 90
Operating Temperature	-30~50℃		

DM-BC75a

Standard colours

9004 9006 9007 9016

Bollard light

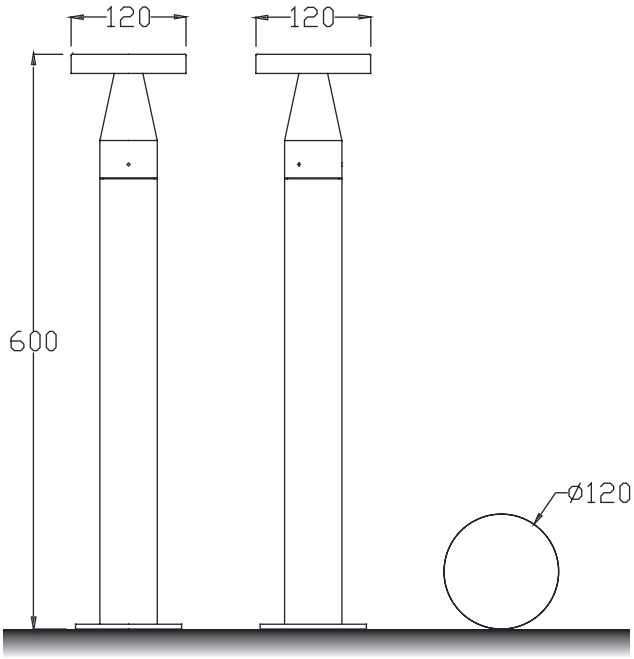

Installation plate

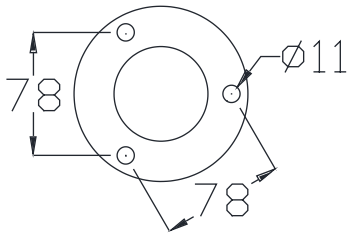

DM-BC76a

Colo(u)r temperature

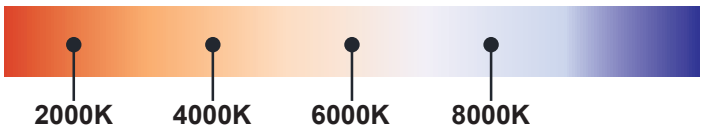

Bollard light

IP65

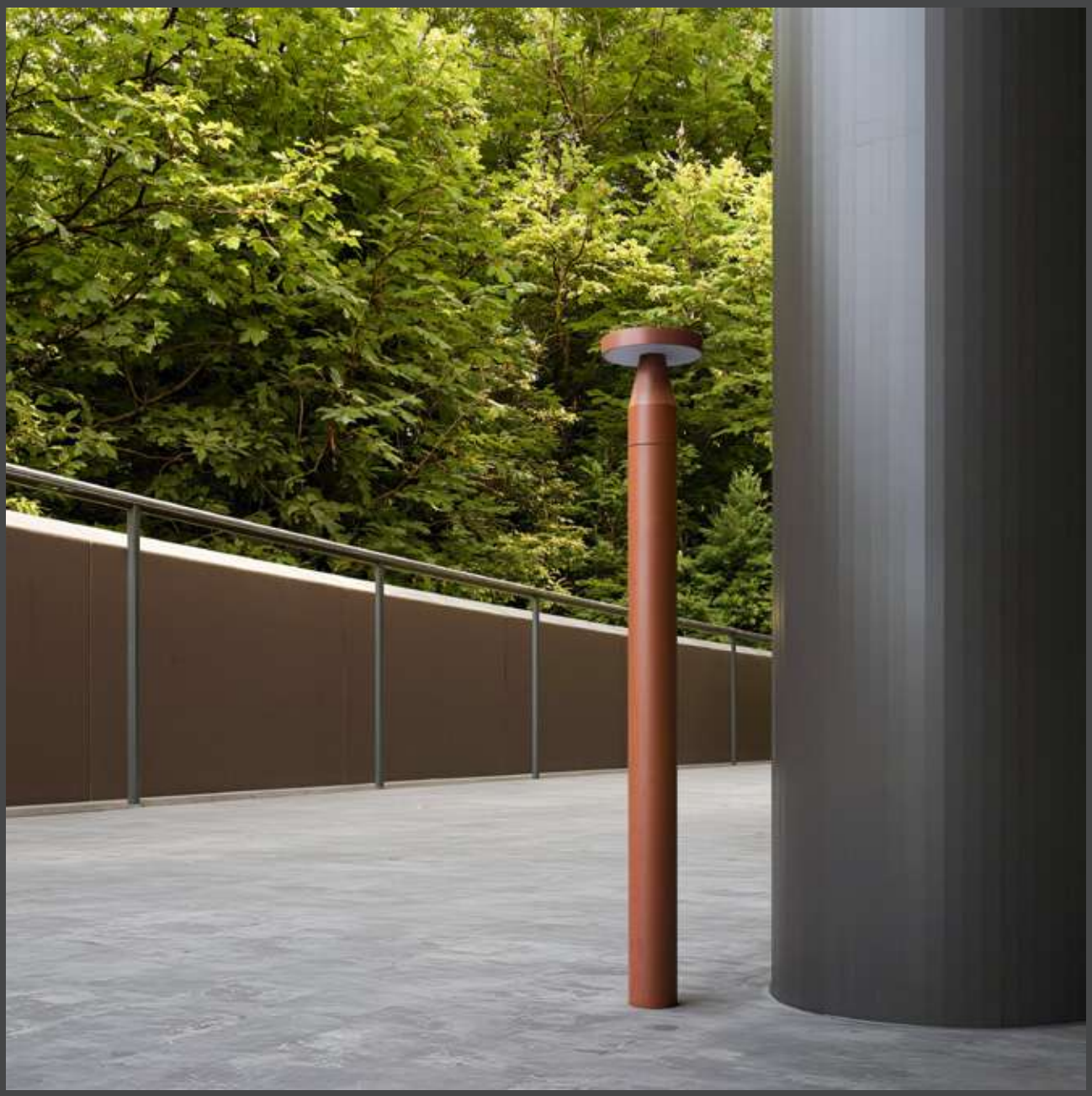

Rated power	12W	Power Factor	> 0.9
LED Quantity	1pcs	Life	> 50000H
Color Temperature	6000k/4000k/3000k	THD	< 15%
Luminous Flux	1100lm	Frequency Range	50/60HZ
Input Voltage	AC100~277V	Lnstallation Pipe Diameter	/
Protection Grade	IP65	CRI	> 90
Operating Temperature	-30~50℃		

DM-BC76a

Standard colours

9004 9006 9007 9016

Bollard light

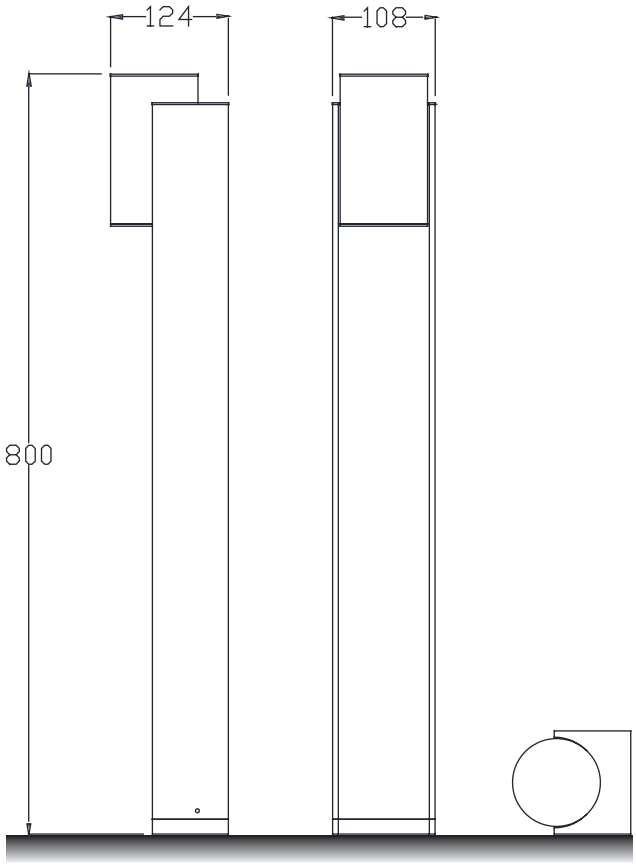

Installation plate

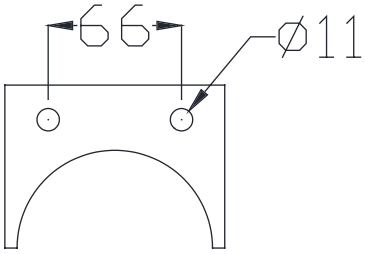

DM-BC77a

Colo(u)r temperature

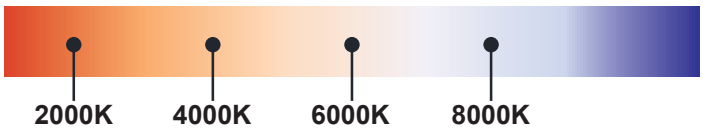

Bollard light

IP65

Rated power	12W	Power Factor	> 0.9
LED Quantity	1pcs	Life	> 50000H
Color Temperature	6000k/4000k/3000k	THD	< 15%
Luminous Flux	1100lm	Frequency Range	50/60HZ
Input Voltage	AC100~277V	Lnstallation Pipe Diameter	/
Protection Grade	IP65	CRI	> 90
Operating Temperature	-30~50℃		

DM-BC77a

Standard colours

9004 9006 9007 9016

Bollard light

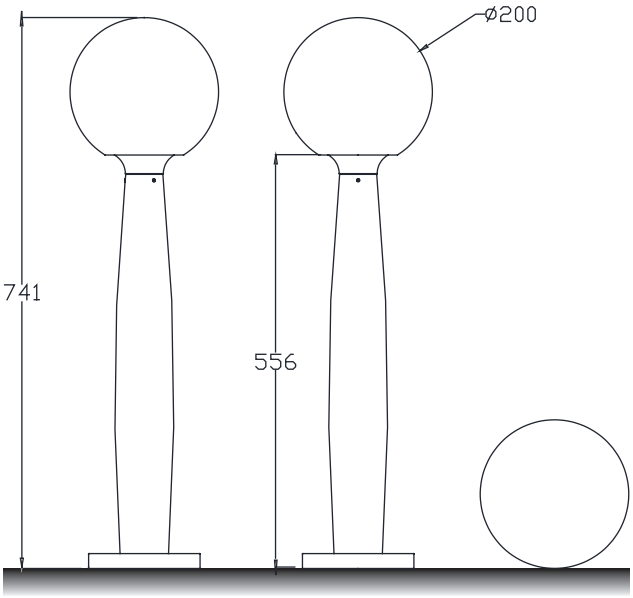

Installation plate

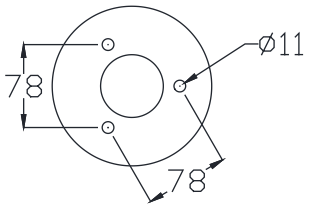

DM-BC78a

Colo(u)r temperature

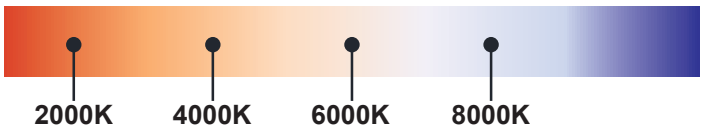

Bollard light

IP65

Rated power	12W	Power Factor	> 0.9
LED Quantity	1pcs	Life	> 50000H
Color Temperature	6000k/4000k/3000k	THD	< 15%
Luminous Flux	1100lm	Frequency Range	50/60HZ
Input Voltage	AC100~277V	Lnstallation Pipe Diameter	/
Protection Grade	IP65	CRI	> 90
Operating Temperature	-30~50℃		

DM-BC78a

Standard colours

9004 9006 9007 9016

Bollard light

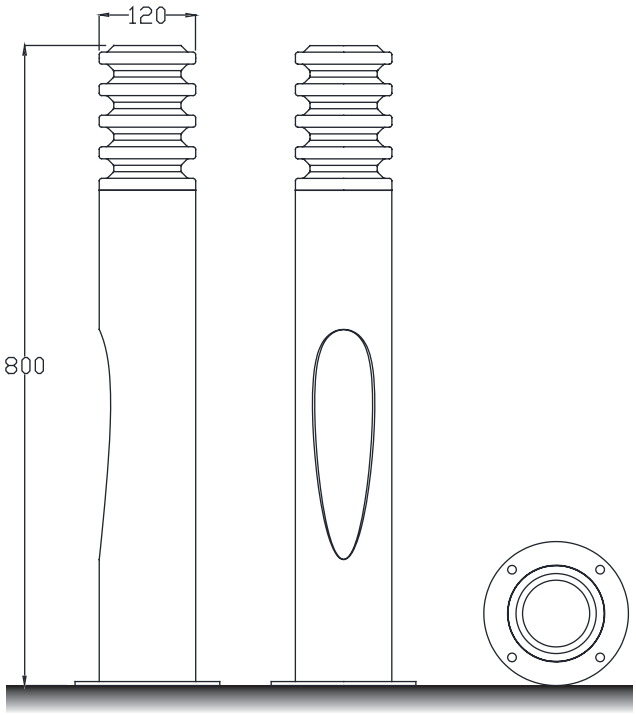

Installation plate

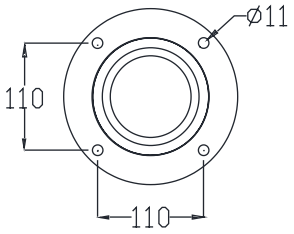

DM-BC79a

Colo(u)r temperature

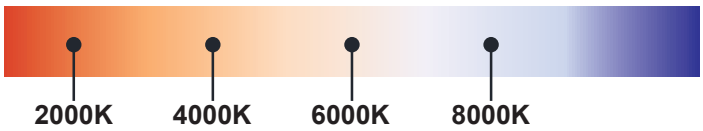

Bollard light

IP65

Rated power	12W	Power Factor	> 0.9
LED Quantity	1pcs	Life	> 50000H
Color Temperature	6000k/4000k/3000k	THD	< 15%
Luminous Flux	1100lm	Frequency Range	50/60HZ
Input Voltage	AC100~277V	Lnstallation Pipe Diameter	/
Protection Grade	IP65	CRI	> 90
Operating Temperature	-30~50℃		

DM-BC79a

Standard colours

9004 9006 9007 9016

Bollard light

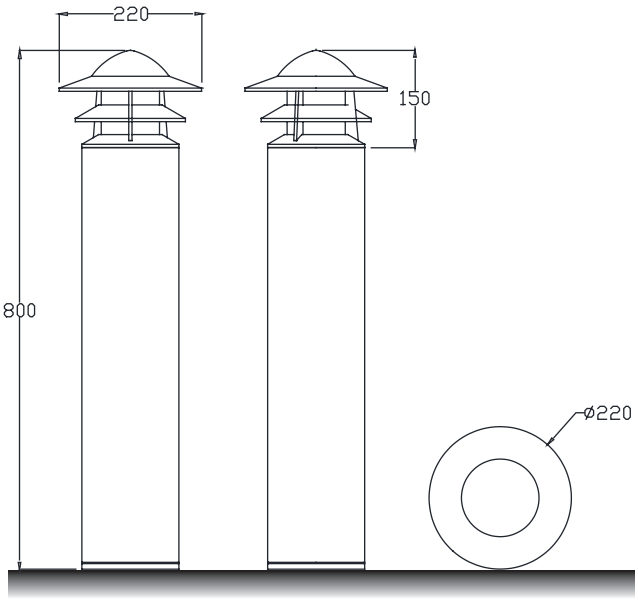

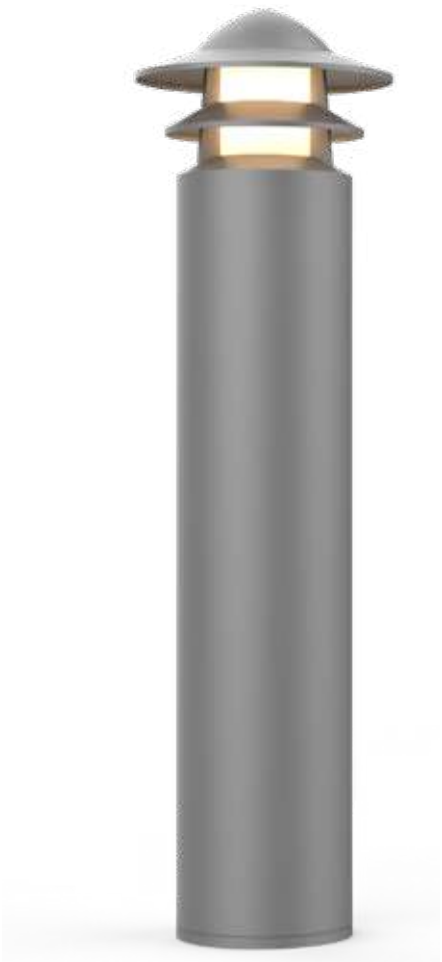

Installation plate

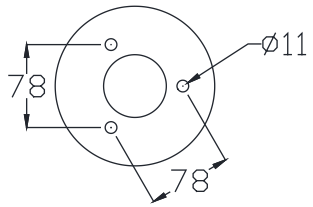

DM-BC80a

Colo(u)r temperature

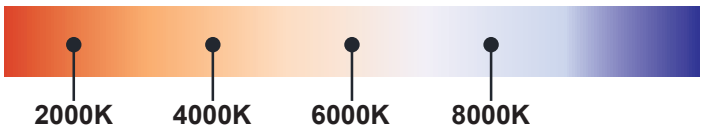

Bollard light

IP65

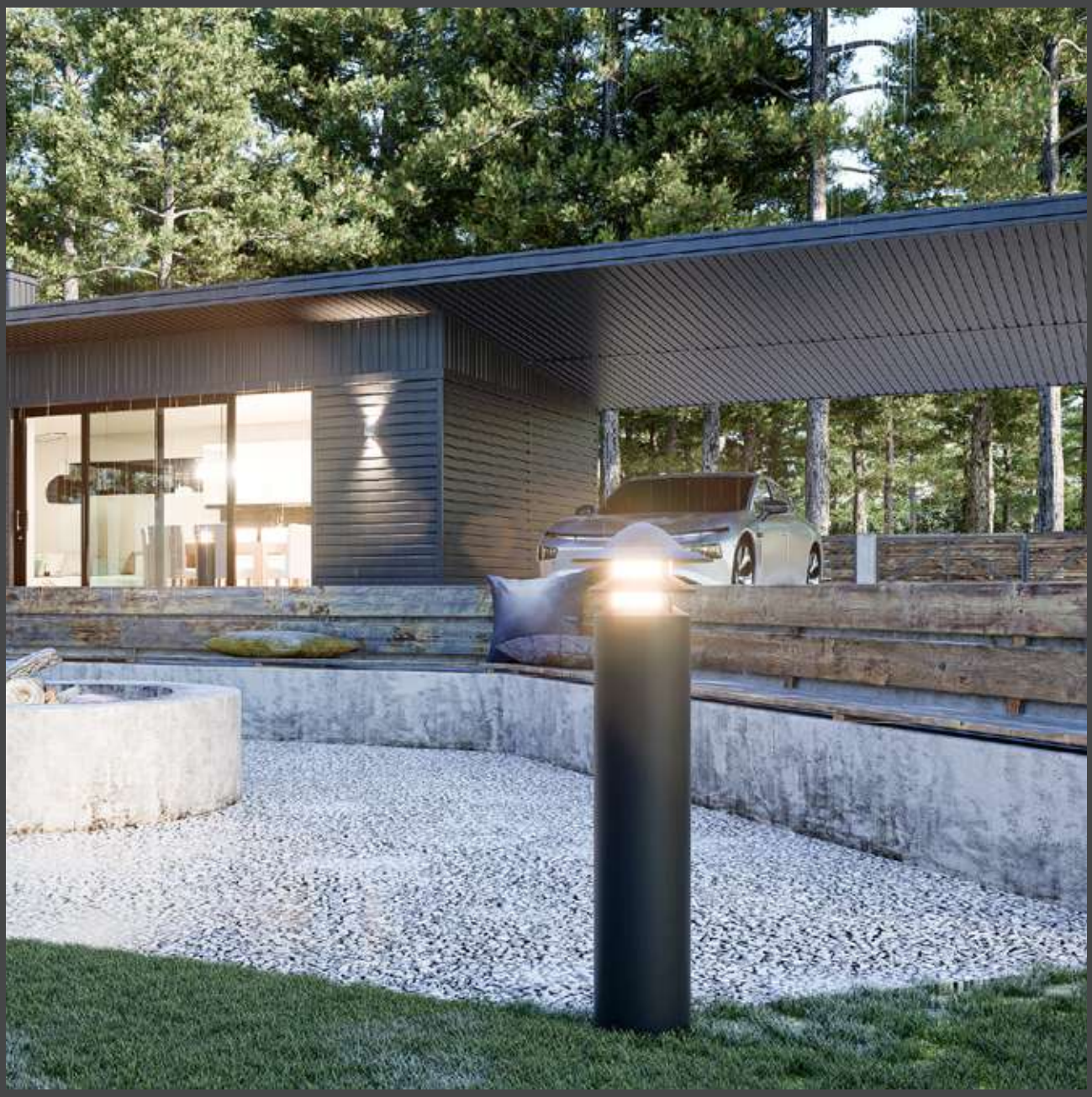

Rated power	12W	Power Factor	> 0.9
LED Quantity	1pcs	Life	> 50000H
Color Temperature	6000k/4000k/3000k	THD	< 15%
Luminous Flux	1100lm	Frequency Range	50/60HZ
Input Voltage	AC100~277V	Lnstallation Pipe Diameter	/
Protection Grade	IP65	CRI	> 90
Operating Temperature	-30~50℃		

DM-BC80a

Standard colours

9004 9006 9007 9016

Bollard light

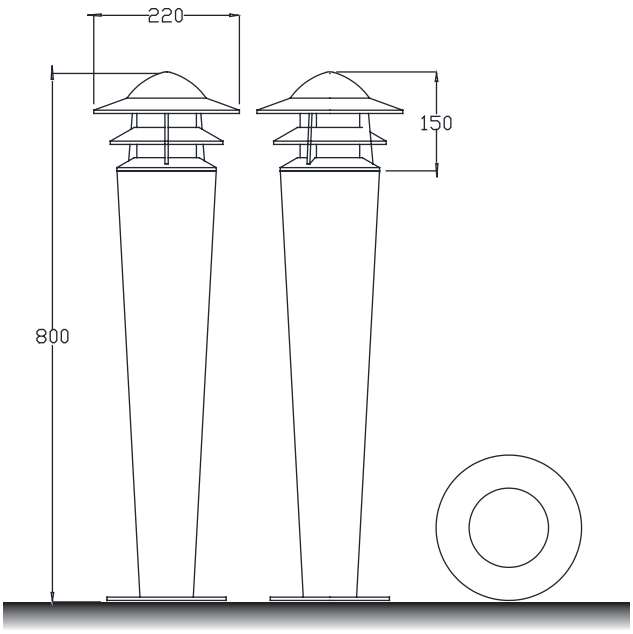

Installation plate

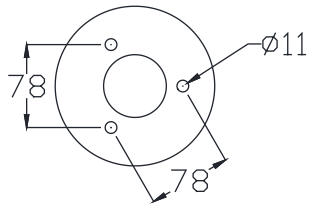

DM-BC80b

Colo(u)r temperature

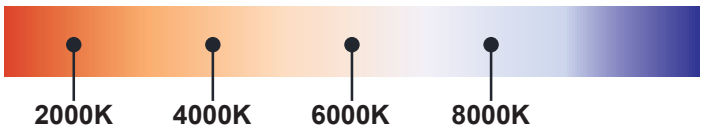

Bollard light

IP65

Rated power	12W	Power Factor	> 0.9
LED Quantity	1pcs	Life	> 50000H
Color Temperature	6000k/4000k/3000k	THD	< 15%
Luminous Flux	1100lm	Frequency Range	50/60HZ
Input Voltage	AC100~277V	Lnstallation Pipe Diameter	/
Protection Grade	IP65	CRI	> 90
Operating Temperature	-30~50℃		

DM-BC80b

Standard colours

9004 9006 9007 9016

Bollard light

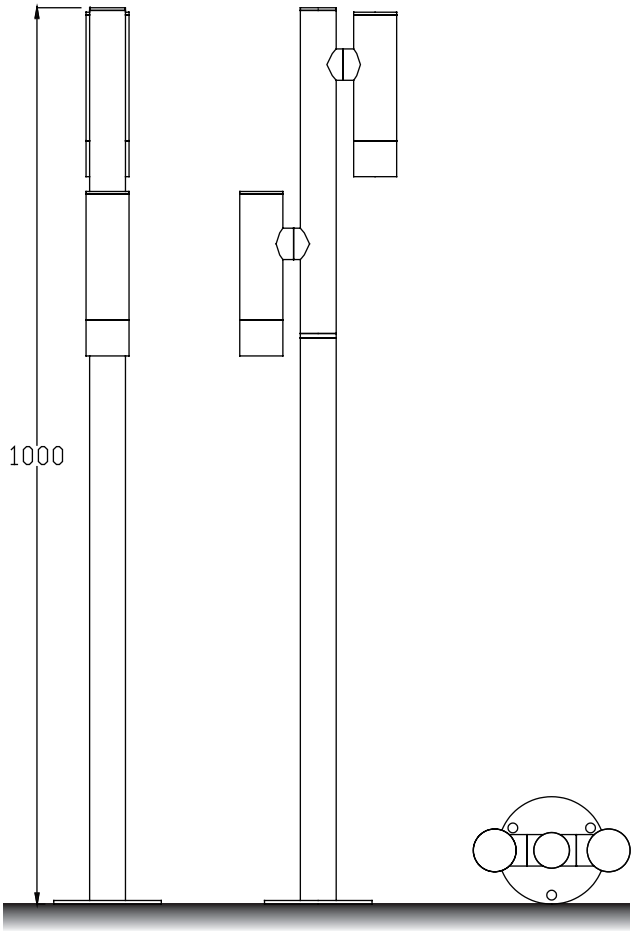

Installation plate

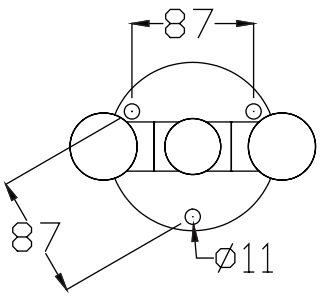

DM-BC81a

Colo(u)r temperature

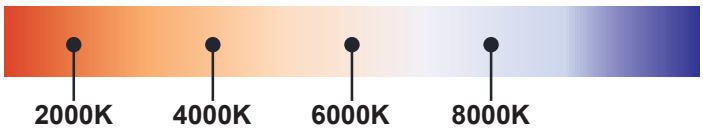

Bollard light

IP65

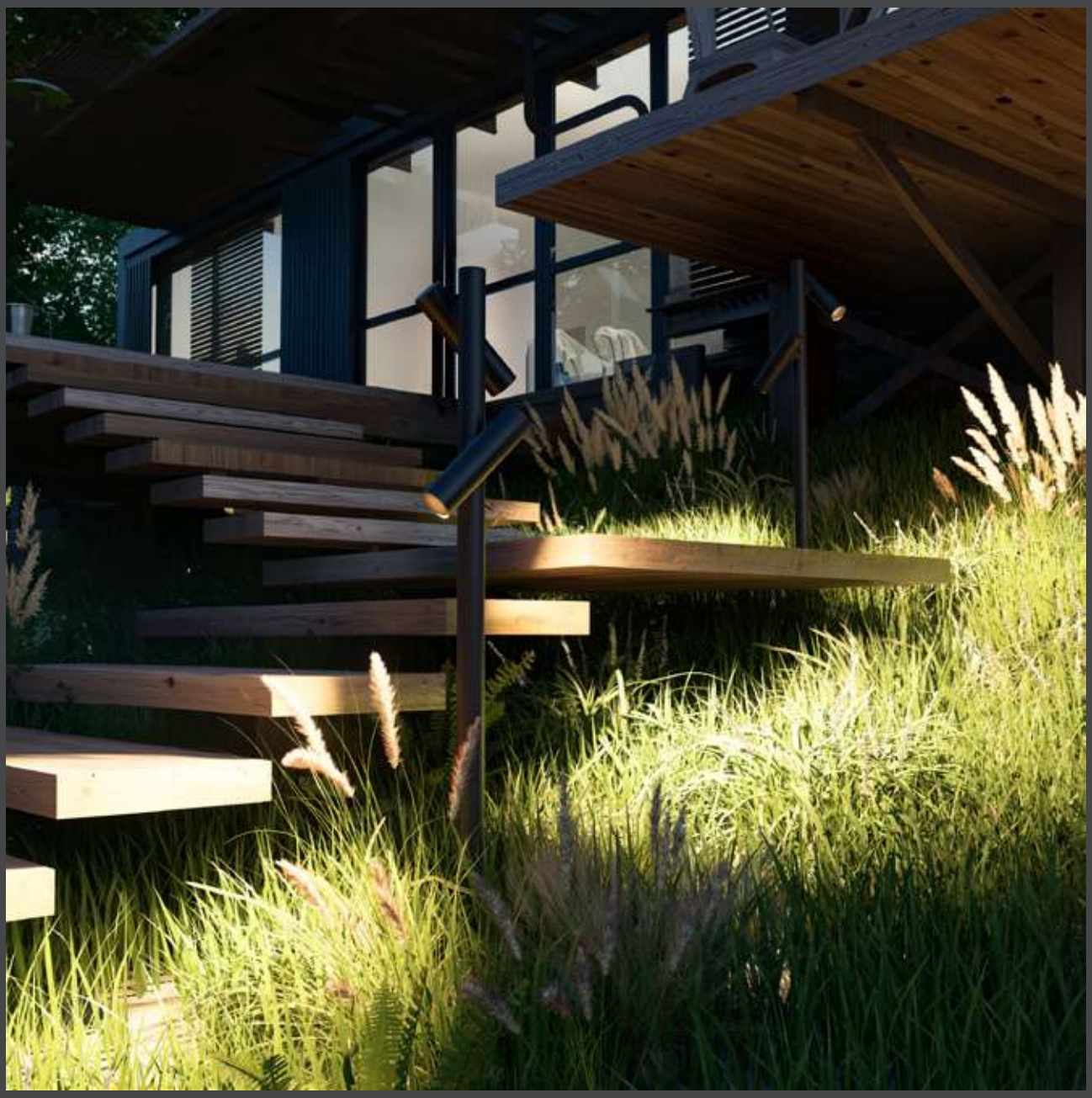

Rated power	12W	Power Factor	> 0.9
LED Quantity	1pcs	Life	> 50000H
Color Temperature	6000k/4000k/3000k	THD	< 15%
Luminous Flux	1100lm	Frequency Range	50/60HZ
Input Voltage	AC100~277V	Lnstallation Pipe Diameter	/
Protection Grade	IP65	CRI	> 90
Operating Temperature	-30~50℃		

DM-BC81a

Standard colours

9004 9006 9007 9016

Bollard light

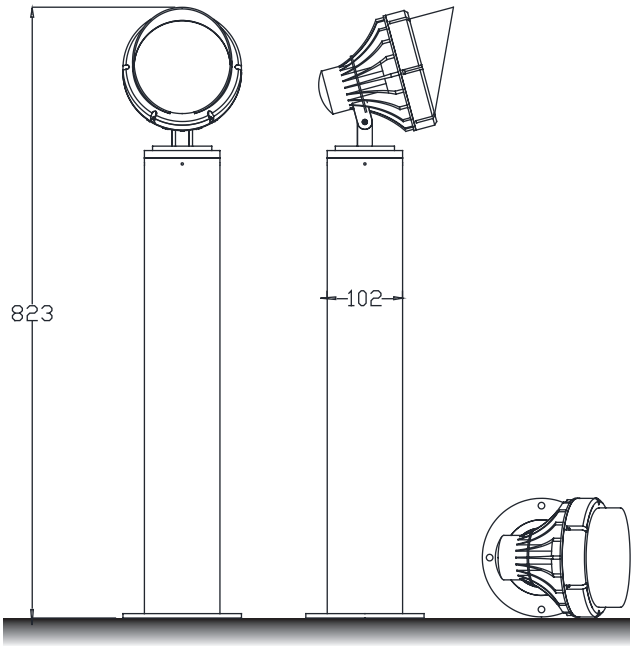

Installation plate

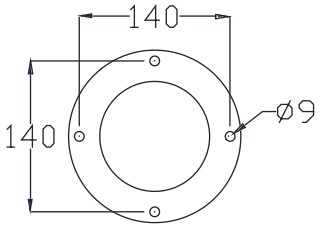

DM-BC82a

Colo(u)r temperature

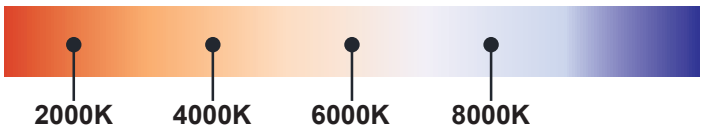

Bollard light

IP65

Rated power	12W	Power Factor	> 0.9
LED Quantity	1pcs	Life	> 50000H
Color Temperature	6000k/4000k/3000k	THD	< 15%
Luminous Flux	1100lm	Frequency Range	50/60HZ
Input Voltage	AC100~277V	Lnstallation Pipe Diameter	/
Protection Grade	IP65	CRI	> 90
Operating Temperature	-30~50℃		

DM-BC82a

Standard colours

9004 9006 9007 9016

Bollard light

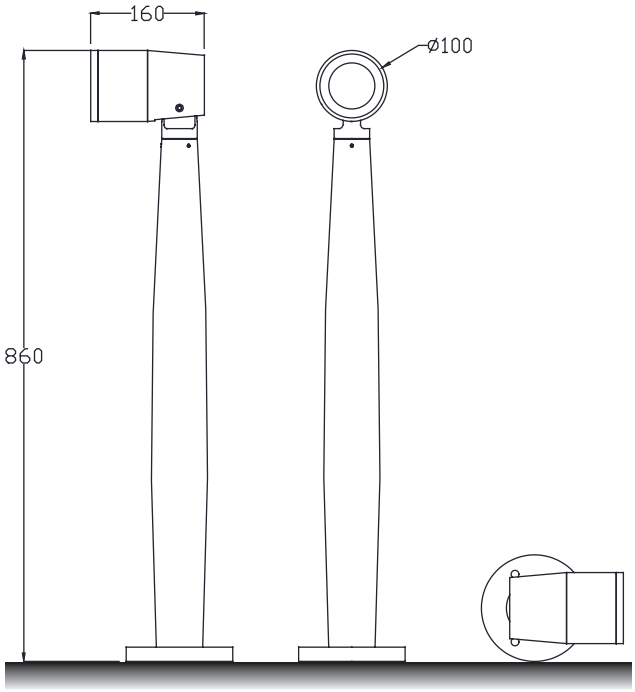

Installation plate

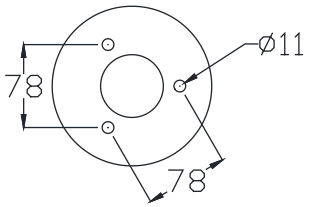

DM-BC83a

Colo(u)r temperature

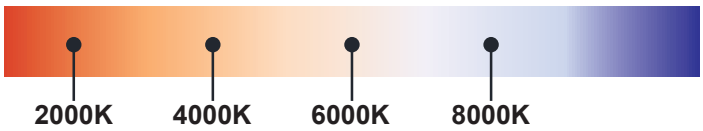

Bollard light

IP65

Rated power	12W	Power Factor	> 0.9
LED Quantity	1pcs	Life	> 50000H
Color Temperature	6000k/4000k/3000k	THD	< 15%
Luminous Flux	1100lm	Frequency Range	50/60HZ
Input Voltage	AC100~277V	Lnstallation Pipe Diameter	/
Protection Grade	IP65	CRI	> 90
Operating Temperature	-30~50℃		

DM-BC83a

Standard colours

9004 9006 9007 9016

Bollard light

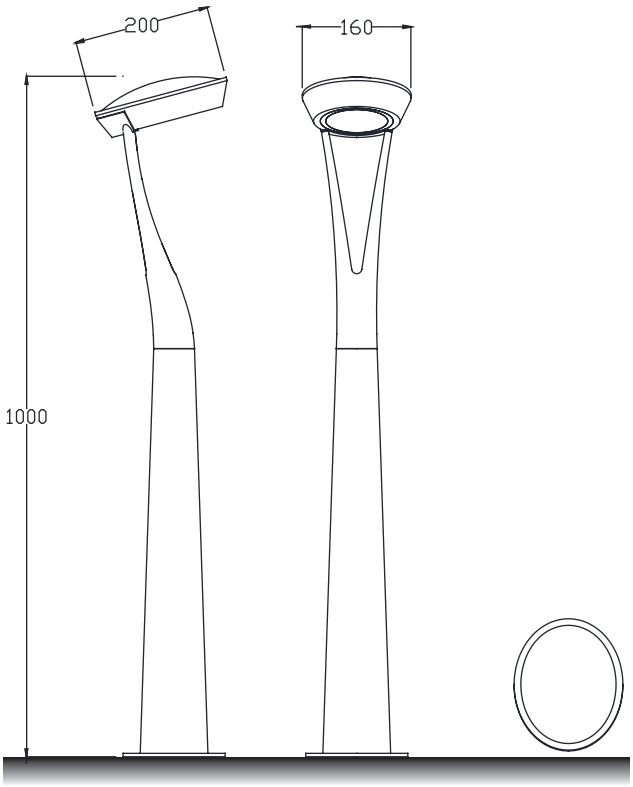

Installation plate

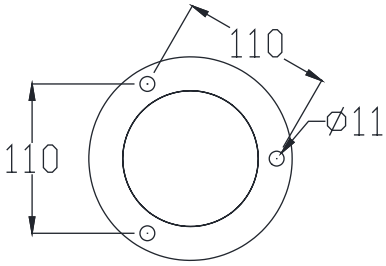

DM-BC84a

Colo(u)r temperature

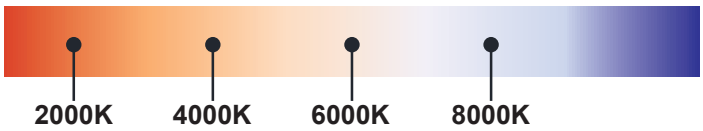

Bollard light

IP65

Rated power	12W	Power Factor	> 0.9
LED Quantity	1pcs	Life	> 50000H
Color Temperature	6000k/4000k/3000k	THD	< 15%
Luminous Flux	1100lm	Frequency Range	50/60HZ
Input Voltage	AC100~277V	Lnstallation Pipe Diameter	/
Protection Grade	IP65	CRI	> 90
Operating Temperature	-30~50℃		

DM-BC84a

Standard colours

9004 9006 9007 9016

Bollard light

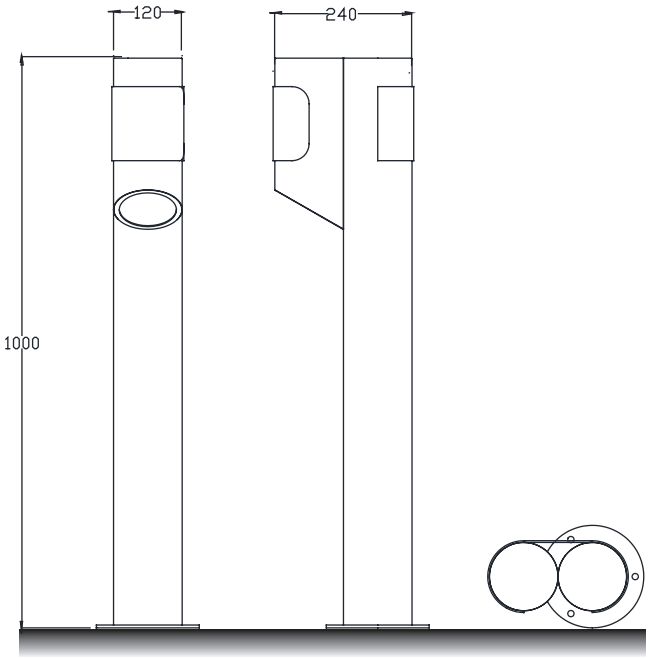

Installation plate

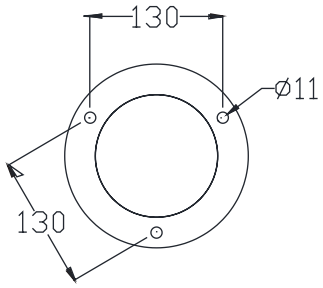

DM-BC85a

Colo(u)r temperature

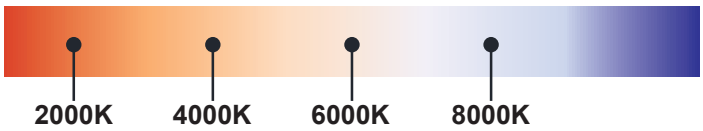

Bollard light

IP65

Rated power	12W	Power Factor	> 0.9
LED Quantity	1pcs	Life	> 50000H
Color Temperature	6000k/4000k/3000k	THD	< 15%
Luminous Flux	1100lm	Frequency Range	50/60HZ
Input Voltage	AC100~277V	Lnstallation Pipe Diameter	/
Protection Grade	IP65	CRI	> 90
Operating Temperature	-30~50℃		

DM-BC85a

Standard colours

9004 9006 9007 9016

Bollard light

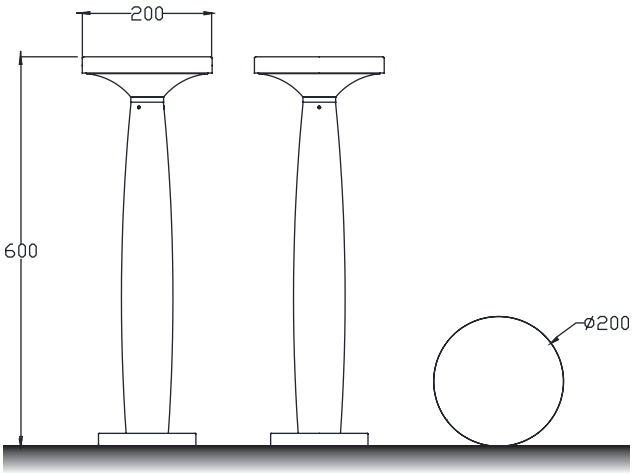

Installation plate

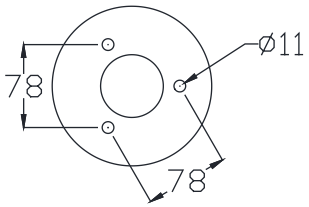

DM-BC86a

Colo(u)r temperature

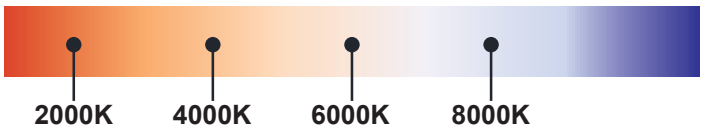

Bollard light

IP65

Rated power	12W	Power Factor	> 0.9
LED Quantity	1pcs	Life	> 50000H
Color Temperature	6000k/4000k/3000k	THD	< 15%
Luminous Flux	1100lm	Frequency Range	50/60HZ
Input Voltage	AC100~277V	Lnstallation Pipe Diameter	/
Protection Grade	IP65	CRI	> 90
Operating Temperature	-30~50℃		

DM-BC86a

Standard colours

9004 9006 9007 9016

Bollard light

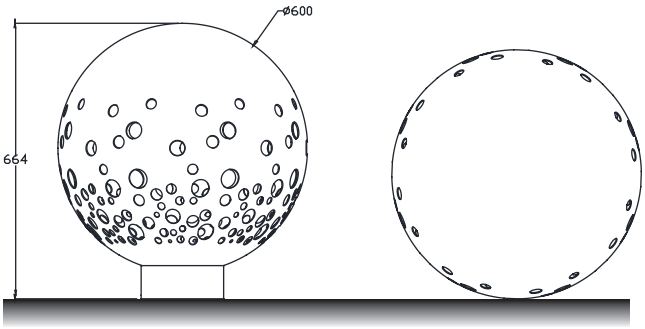

Installation plate

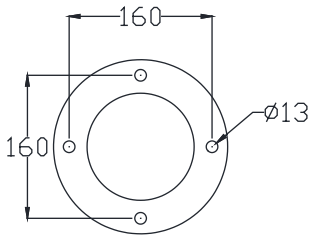

DM-BC87a

Colo(u)r temperature

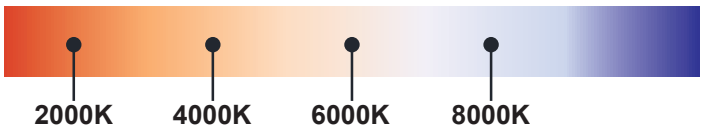

Bollard light

IP65

Rated power	12W	Power Factor	> 0.9
LED Quantity	1pcs	Life	> 50000H
Color Temperature	6000k/4000k/3000k	THD	< 15%
Luminous Flux	1100lm	Frequency Range	50/60HZ
Input Voltage	AC100~277V	Lnstallation Pipe Diameter	/
Protection Grade	IP65	CRI	> 90
Operating Temperature	-30~50℃		

DM-BC87a

Standard colours

9004 9006 9007 9016

Bollard light

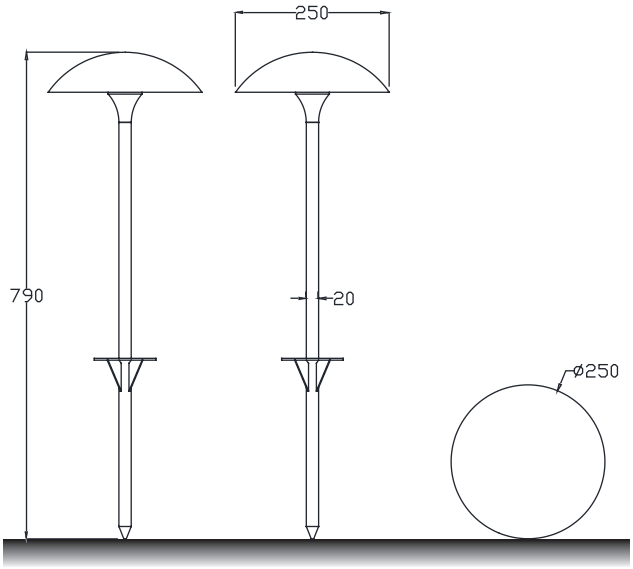

Installation plate

DM-BC88a

Colo(u)r temperature

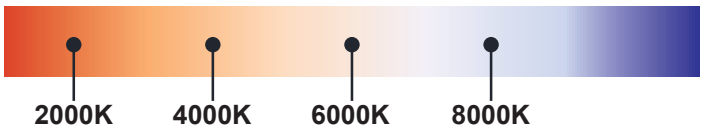

Bollard light

IP65

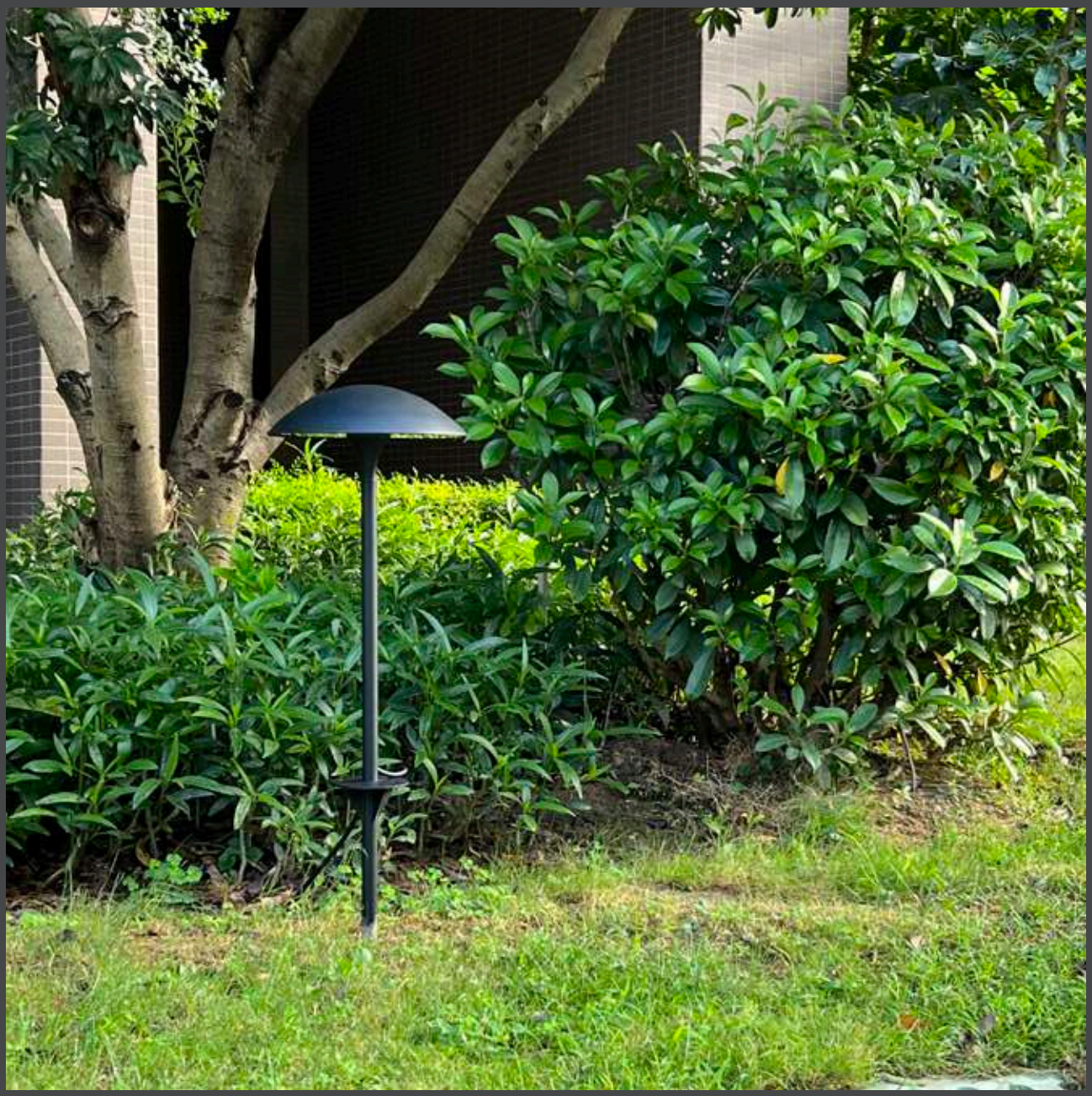

Rated power	12W	Power Factor	> 0.9
LED Quantity	1pcs	Life	> 50000H
Color Temperature	6000k/4000k/3000k	THD	< 15%
Luminous Flux	1100lm	Frequency Range	50/60HZ
Input Voltage	AC100~277V	Lnstallation Pipe Diameter	/
Protection Grade	IP65	CRI	> 90
Operating Temperature	-30~50℃		

DM-BC88a

Standard colours

9004 9006 9007 9016

Bollard light

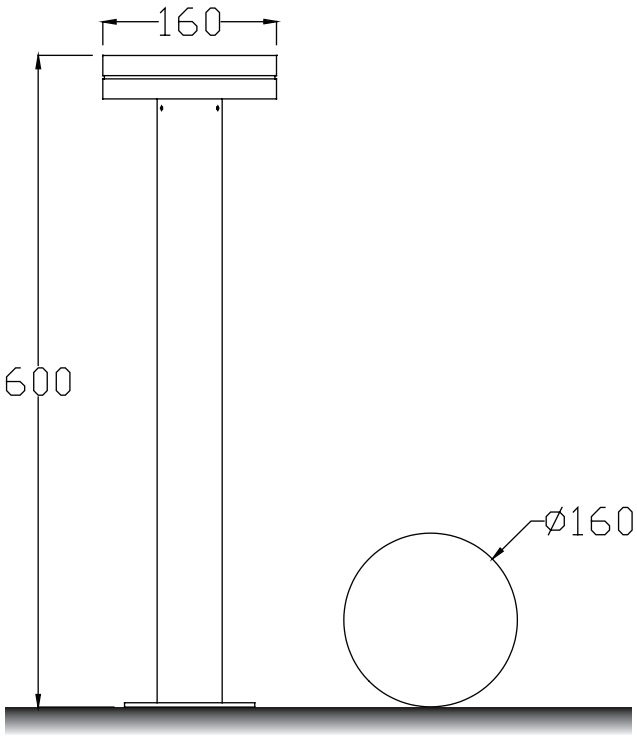

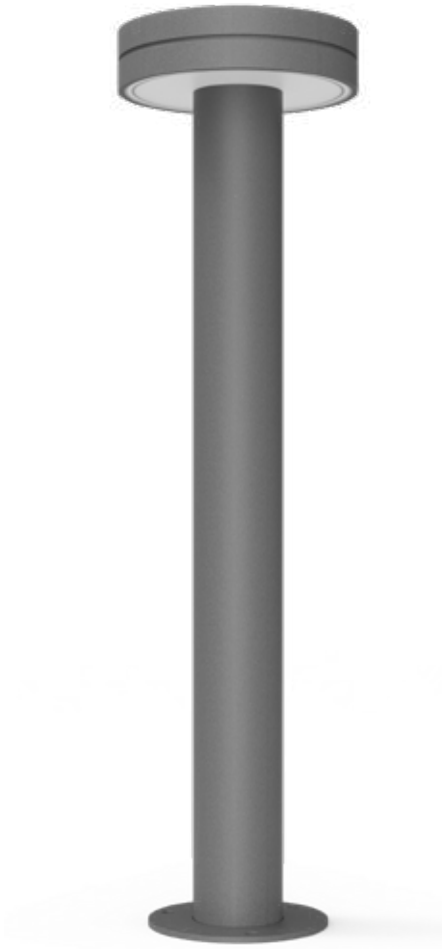

Installation plate

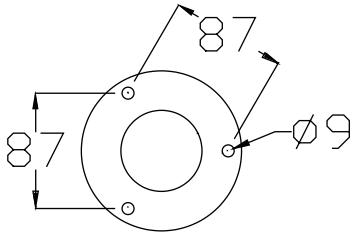

DM-BC89a

Colo(u)r temperature

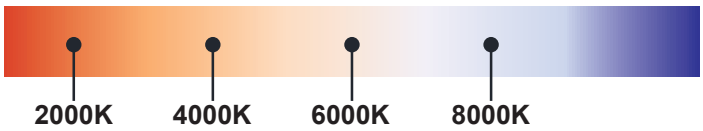

Bollard light

IP65

Rated power	12W	Power Factor	> 0.9
LED Quantity	1pcs	Life	> 50000H
Color Temperature	6000k/4000k/3000k	THD	< 15%
Luminous Flux	1100lm	Frequency Range	50/60HZ
Input Voltage	AC100~277V	Lnstallation Pipe Diameter	/
Protection Grade	IP65	CRI	> 90
Operating Temperature	-30~50℃		

DM-BC89a

Standard colours

9004 9006 9007 9016

Bollard light

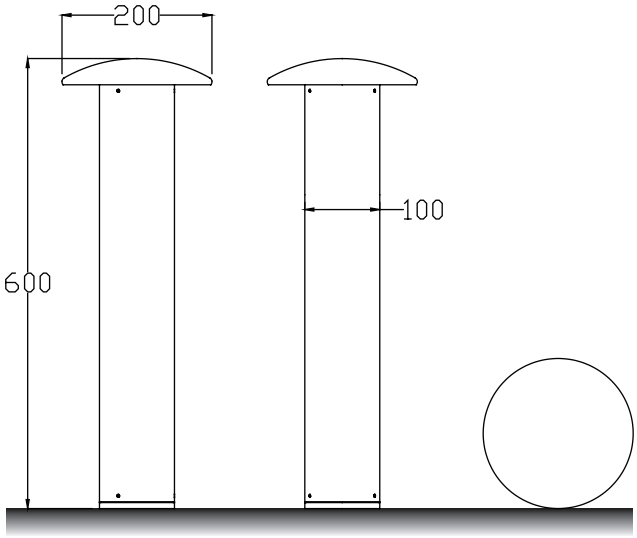

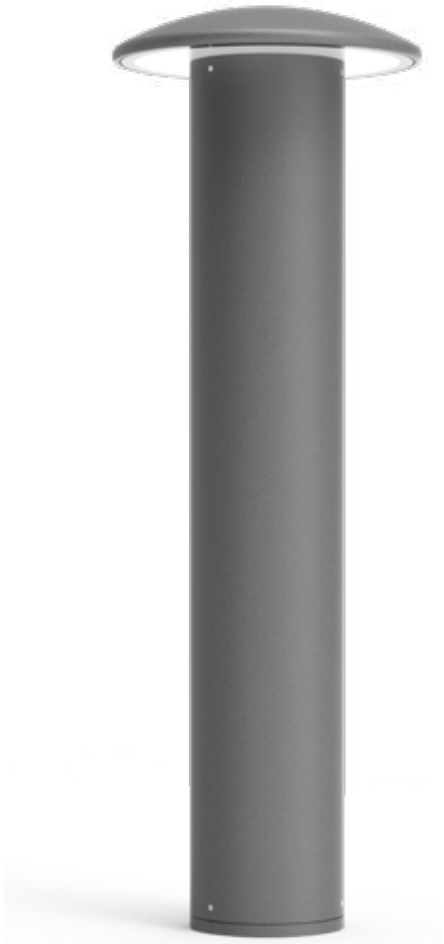

Installation plate

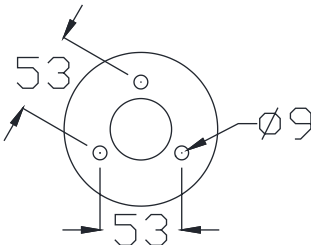

DM-BC90a

Colo(u)r temperature

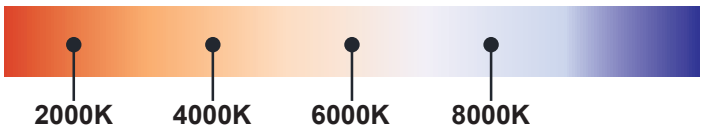

Bollard light

IP65

Rated power	12W	Power Factor	> 0.9
LED Quantity	1pcs	Life	> 50000H
Color Temperature	6000k/4000k/3000k	THD	< 15%
Luminous Flux	1100lm	Frequency Range	50/60HZ
Input Voltage	AC100~277V	Lnstallation Pipe Diameter	/
Protection Grade	IP65	CRI	> 90
Operating Temperature	-30~50℃		

DM-BC90a

Standard colours

9004 9006 9007 9016

Bollard light

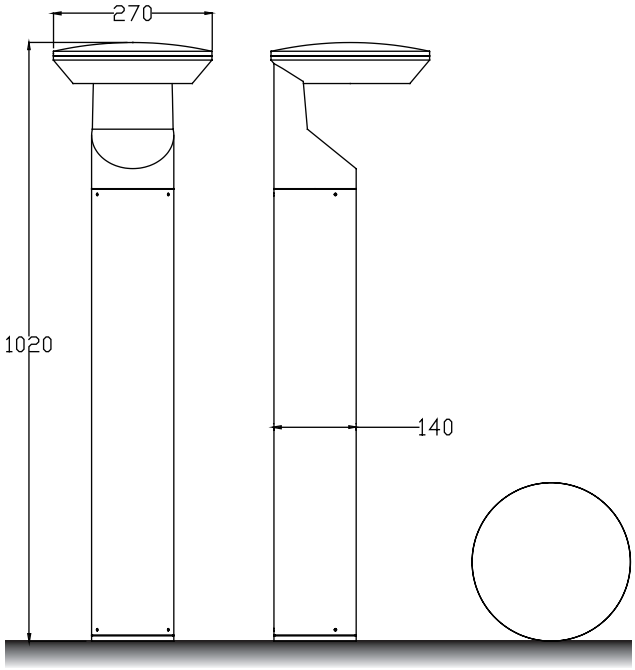

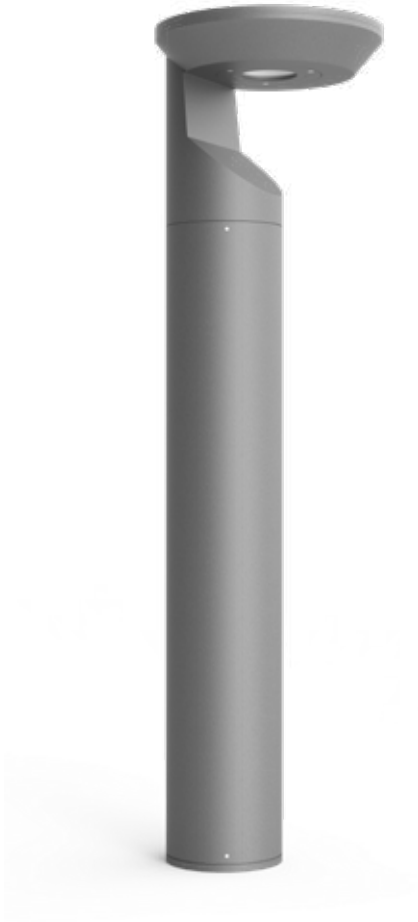

Installation plate

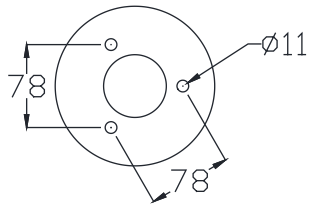

DM-BC91a

Colo(u)r temperature

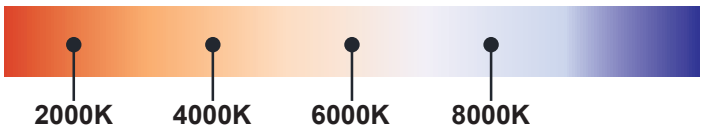

Bollard light

IP65

Rated power	12W	Power Factor	> 0.9
LED Quantity	1pcs	Life	> 50000H
Color Temperature	6000k/4000k/3000k	THD	< 15%
Luminous Flux	1100lm	Frequency Range	50/60HZ
Input Voltage	AC100~277V	Lnstallation Pipe Diameter	/
Protection Grade	IP65	CRI	> 90
Operating Temperature	-30~50℃		

DM-BC91a

Standard colours

9004 9006 9007 9016

Bollard light

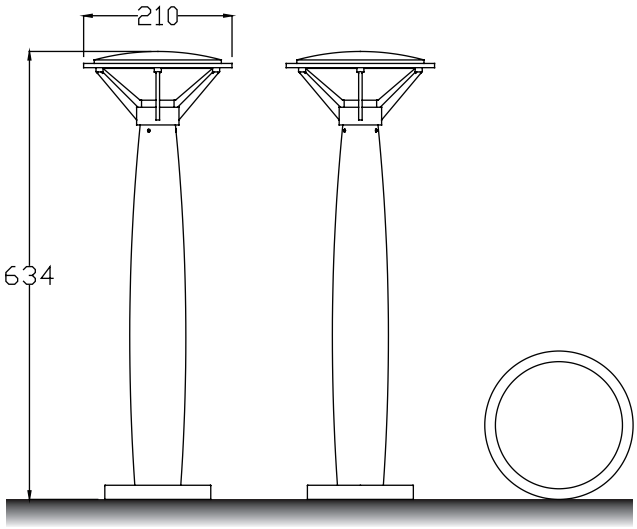

Installation plate

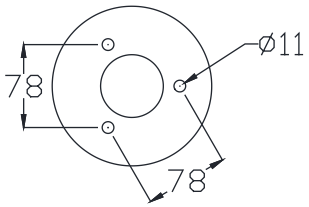

DM-BC92a

Colo(u)r temperature

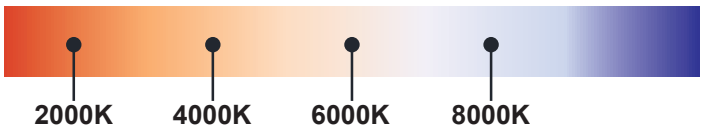

Bollard light

IP65

Rated power	12W	Power Factor	> 0.9
LED Quantity	1pcs	Life	> 50000H
Color Temperature	6000k/4000k/3000k	THD	< 15%
Luminous Flux	1100lm	Frequency Range	50/60HZ
Input Voltage	AC100~277V	Lnstallation Pipe Diameter	/
Protection Grade	IP65	CRI	> 90
Operating Temperature	-30~50℃		

DM-BC92a

Standard colours

9004 9006 9007 9016

Bollard light

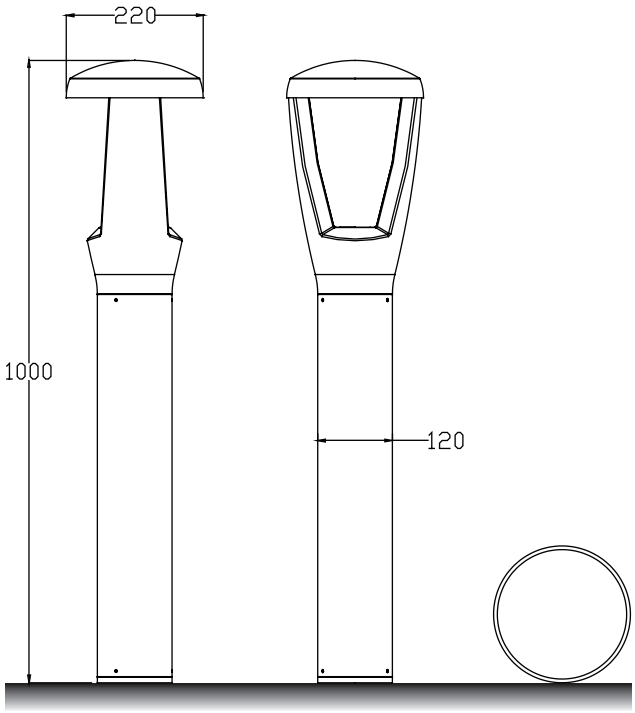

Installation plate

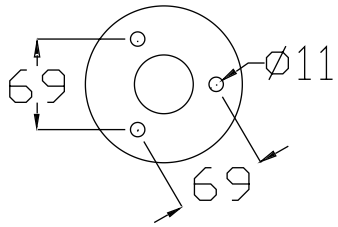

DM-BC93a

Colo(u)r temperature

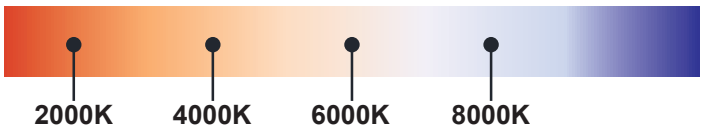

Bollard light

IP65

Rated power	12W	Power Factor	> 0.9
LED Quantity	1pcs	Life	> 50000H
Color Temperature	6000k/4000k/3000k	THD	< 15%
Luminous Flux	1100lm	Frequency Range	50/60HZ
Input Voltage	AC100~277V	Lnstallation Pipe Diameter	/
Protection Grade	IP65	CRI	> 90
Operating Temperature	-30~50℃		

DM-BC93a

Standard colours

9004 9006 9007 9016

Bollard light

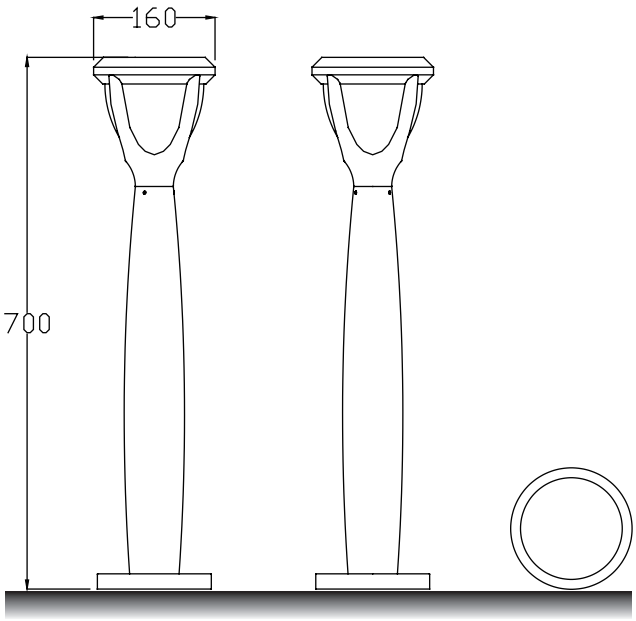

Installation plate

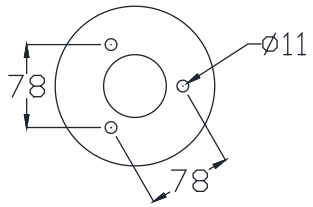

DM-BC94a

Colo(u)r temperature

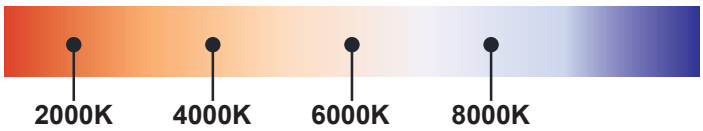

Bollard light

IP65

Rated power	12W	Power Factor	> 0.9
LED Quantity	1pcs	Life	> 50000H
Color Temperature	6000k/4000k/3000k	THD	< 15%
Luminous Flux	1100lm	Frequency Range	50/60HZ
Input Voltage	AC100~277V	Lnstallation Pipe Diameter	/
Protection Grade	IP65	CRI	> 90
Operating Temperature	-30~50℃		

DM-BC94a

Standard colours

9004 9006 9007 9016

Bollard light

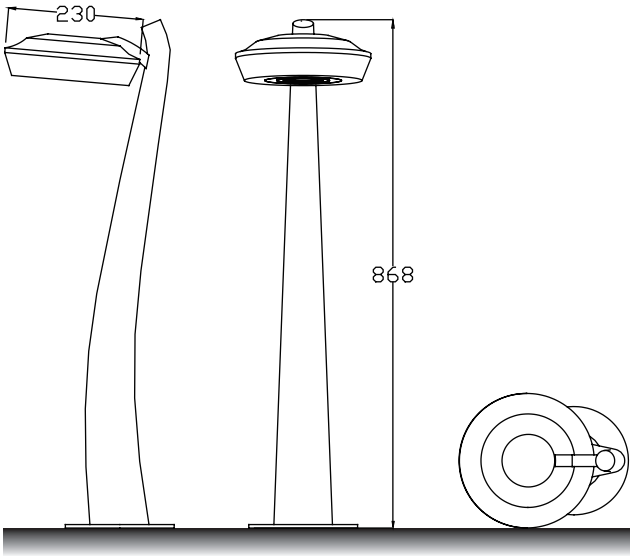

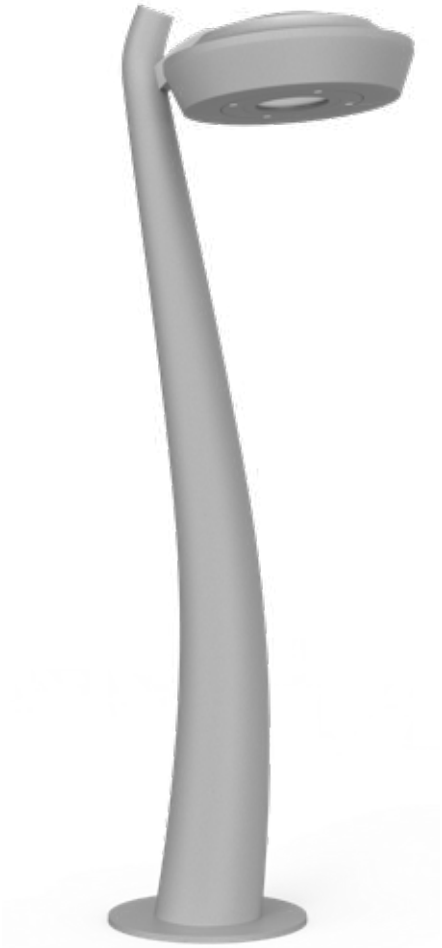

Installation plate

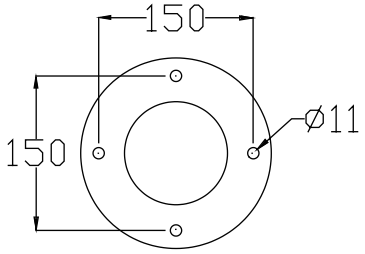

DM-BC95a

Colo(u)r temperature

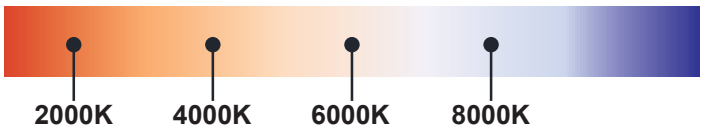

Bollard light

IP65

Rated power	12W	Power Factor	> 0.9
LED Quantity	1pcs	Life	> 50000H
Color Temperature	6000k/4000k/3000k	THD	< 15%
Luminous Flux	1100lm	Frequency Range	50/60HZ
Input Voltage	AC100~277V	Lnstallation Pipe Diameter	/
Protection Grade	IP65	CRI	> 90
Operating Temperature	-30~50℃		

DM-BC95a

Standard colours

9004 9006 9007 9016

Bollard light

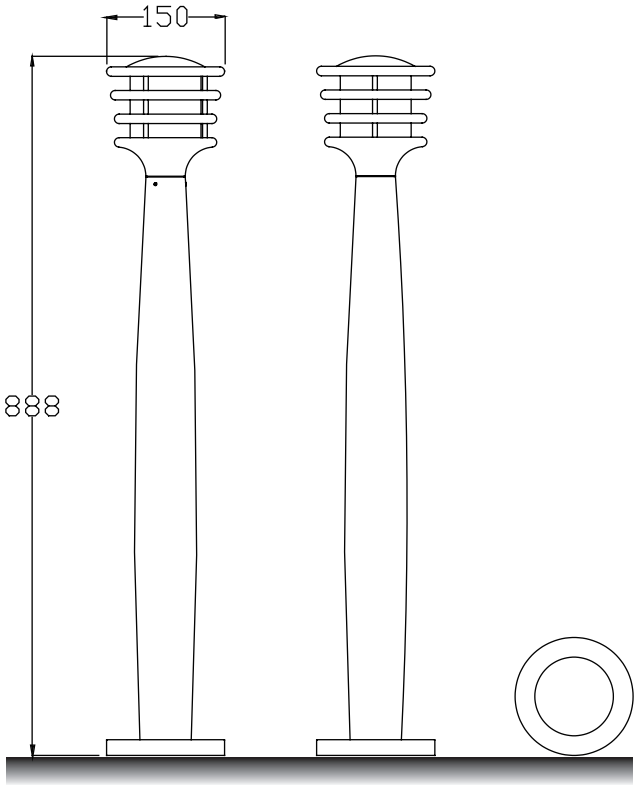

Installation plate

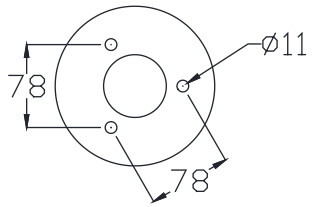

DM-BC96a

Colo(u)r temperature

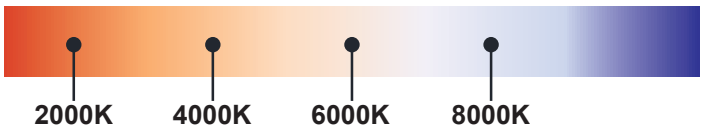

Bollard light

IP65

Rated power	12W	Power Factor	> 0.9
LED Quantity	1pcs	Life	> 50000H
Color Temperature	6000k/4000k/3000k	THD	< 15%
Luminous Flux	1100lm	Frequency Range	50/60HZ
Input Voltage	AC100~277V	Lnstallation Pipe Diameter	/
Protection Grade	IP65	CRI	> 90
Operating Temperature	-30~50℃		

DM-BC96a

Standard colours

9004 9006 9007 9016

Bollard light

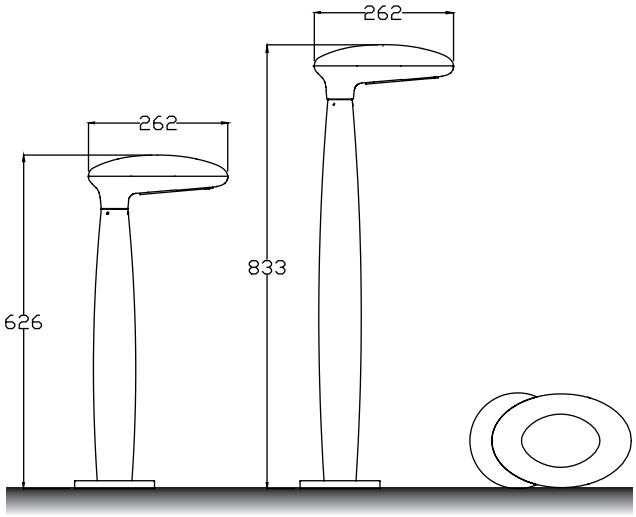

Installation plate

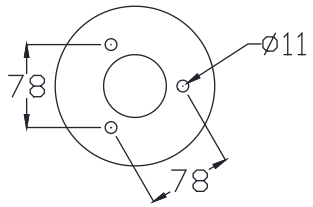

DM-BC97a

Colo(u)r temperature

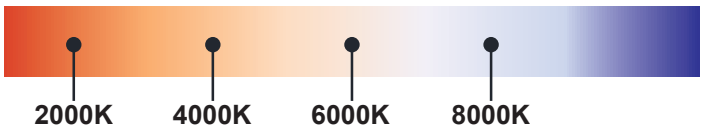

Bollard light

IP65

Rated power	12W	Power Factor	> 0.9
LED Quantity	1pcs	Life	> 50000H
Color Temperature	6000k/4000k/3000k	THD	< 15%
Luminous Flux	1100lm	Frequency Range	50/60HZ
Input Voltage	AC100~277V	Lnstallation Pipe Diameter	/
Protection Grade	IP65	CRI	> 90
Operating Temperature	-30~50℃		

DM-BC97a

Standard colours

9004 9006 9007 9016

Bollard light

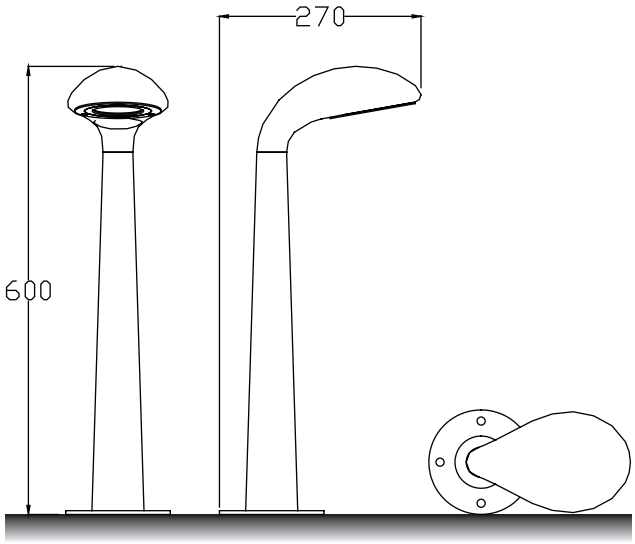

Installation plate

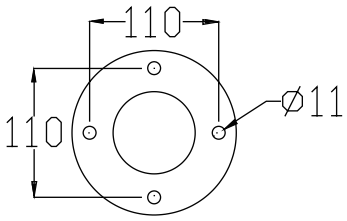

DM-BC98a

Colo(u)r temperature

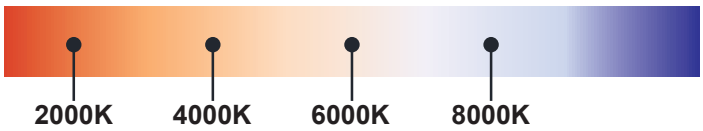

Bollard light

IP65

Rated power	12W	Power Factor	> 0.9
LED Quantity	1pcs	Life	> 50000H
Color Temperature	6000k/4000k/3000k	THD	< 15%
Luminous Flux	1100lm	Frequency Range	50/60HZ
Input Voltage	AC100~277V	Lnstallation Pipe Diameter	/
Protection Grade	IP65	CRI	> 90
Operating Temperature	-30~50℃		

DM-BC98a

Standard colours

9004 9006 9007 9016

Bollard light

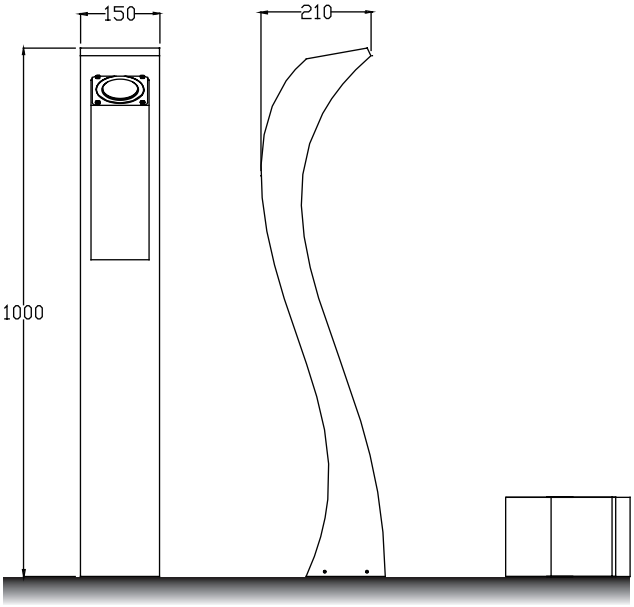

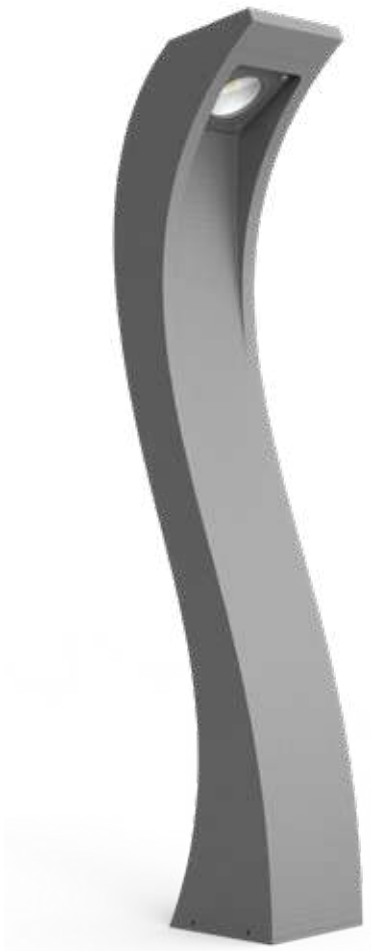

Installation plate

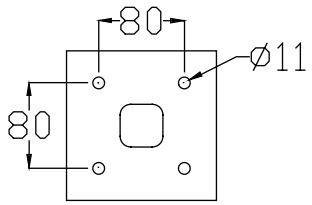

DM-BC99a

Colo(u)r temperature

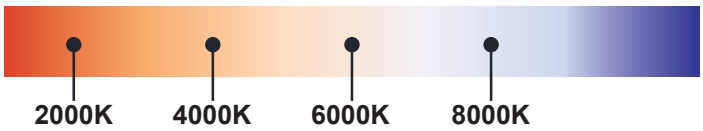

Bollard light

IP65

Rated power	12W	Power Factor	> 0.9
LED Quantity	1pcs	Life	> 50000H
Color Temperature	6000k/4000k/3000k	THD	< 15%
Luminous Flux	1100lm	Frequency Range	50/60HZ
Input Voltage	AC100~277V	Lnstallation Pipe Diameter	/
Protection Grade	IP65	CRI	> 90
Operating Temperature	-30~50℃		

DM-BC99a

Standard colours

9004 9006 9007 9016

Bollard light

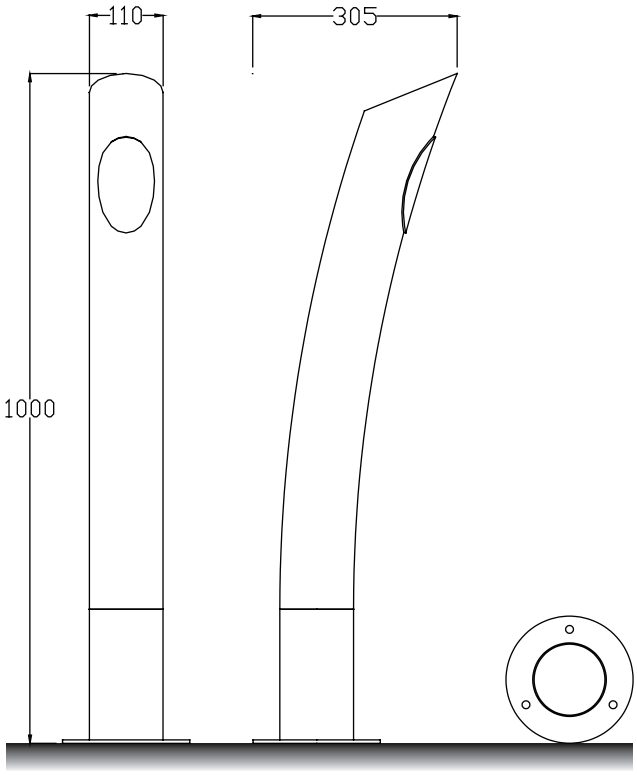

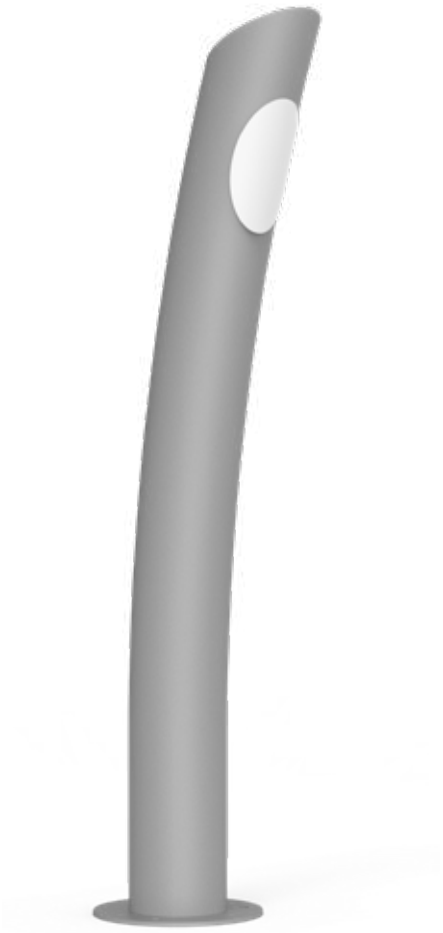

Installation plate

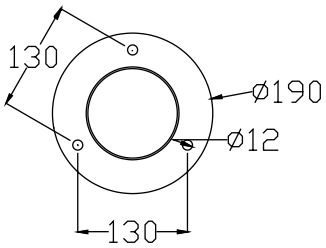

DM-BC100a

Colo(u)r temperature

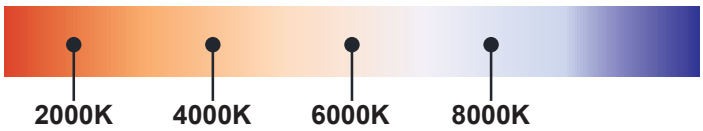

Bollard light

IP65

Rated power	12W	Power Factor	> 0.9
LED Quantity	1pcs	Life	> 50000H
Color Temperature	6000k/4000k/3000k	THD	< 15%
Luminous Flux	1100lm	Frequency Range	50/60HZ
Input Voltage	AC100~277V	Lnstallation Pipe Diameter	/
Protection Grade	IP65	CRI	> 90
Operating Temperature	-30~50℃		

DM-BC100a

Standard colours

9004 9006 9007 9016

Bollard light

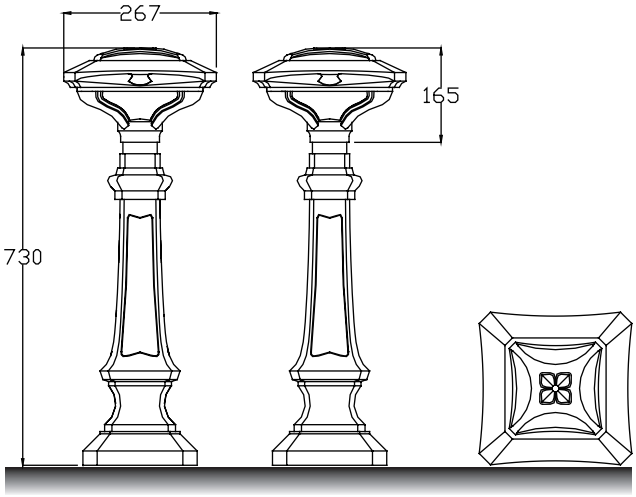

Installation plate

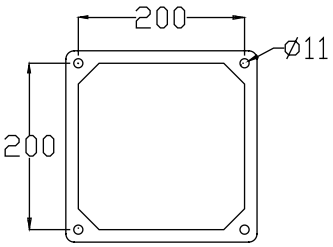

DM-BC101a

Colo(u)r temperature

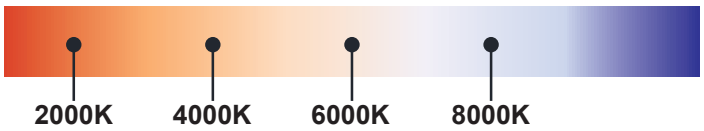

Bollard light

IP65

Rated power	12W	Power Factor	> 0.9
LED Quantity	1pcs	Life	> 50000H
Color Temperature	6000k/4000k/3000k	THD	< 15%
Luminous Flux	1100lm	Frequency Range	50/60HZ
Input Voltage	AC100~277V	Lnstallation Pipe Diameter	/
Protection Grade	IP65	CRI	> 90
Operating Temperature	-30~50℃		

DM-BC101a

Standard colours

9004 9006 9007 9016

Bollard light

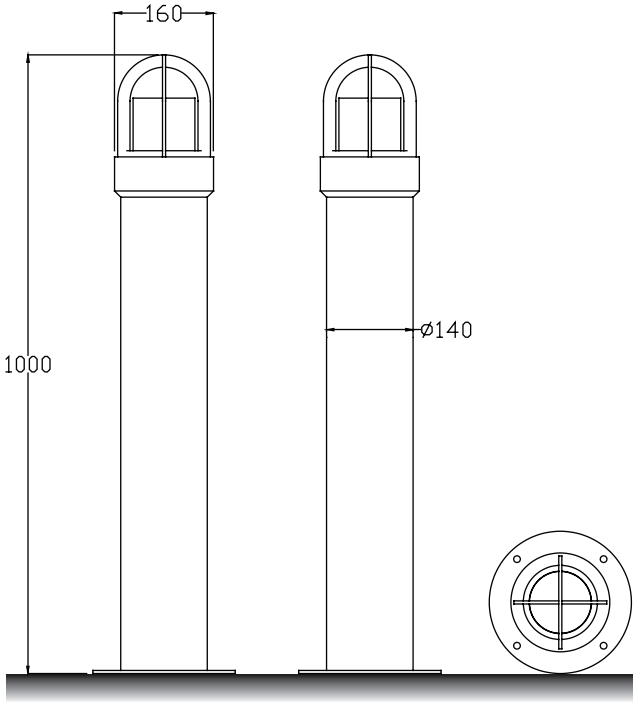

Installation plate

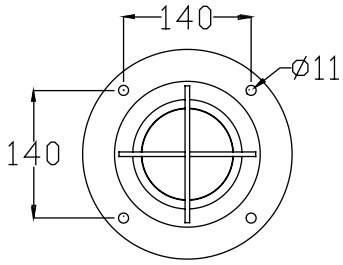

DM-BC102a

Colo(u)r temperature

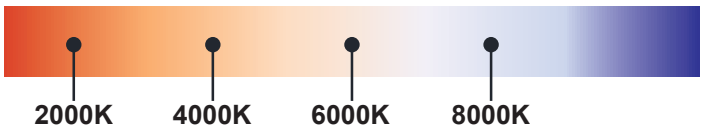

Bollard light

IP65

Rated power	12W	Power Factor	> 0.9
LED Quantity	1pcs	Life	> 50000H
Color Temperature	6000k/4000k/3000k	THD	< 15%
Luminous Flux	1100lm	Frequency Range	50/60HZ
Input Voltage	AC100~277V	Lnstallation Pipe Diameter	/
Protection Grade	IP65	CRI	> 90
Operating Temperature	-30~50℃		

DM-BC102a

Standard colours

9004 9006 9007 9016

Bollard light

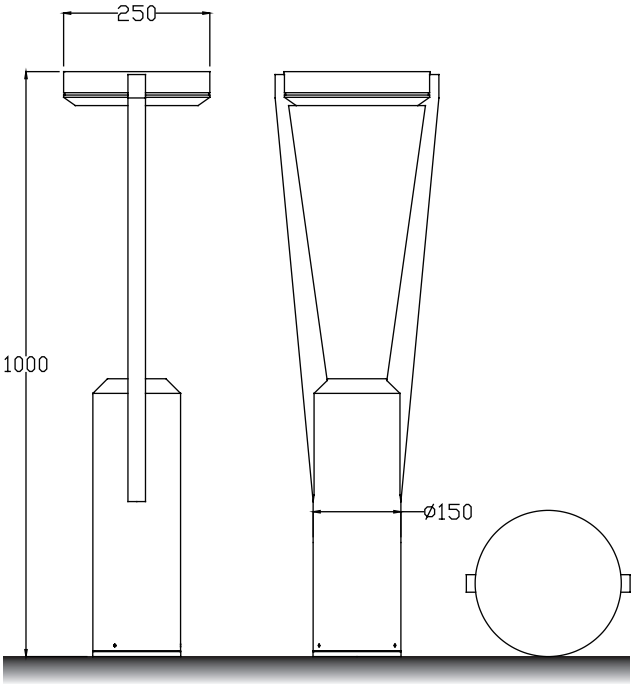

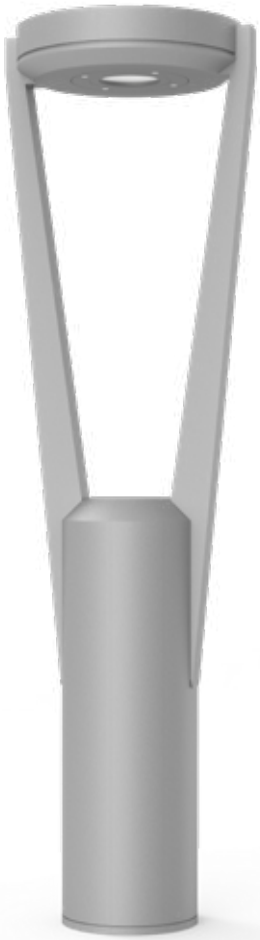

Installation plate

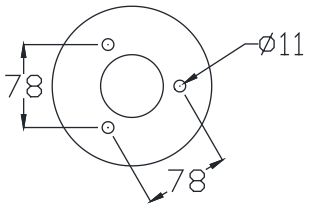

DM-BC103a

Colo(u)r temperature

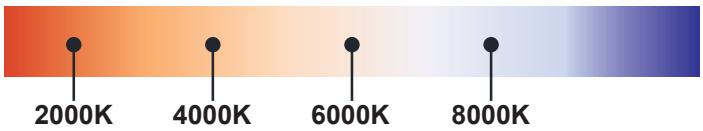

Bollard light

IP65

Rated power	12W	Power Factor	> 0.9
LED Quantity	1pcs	Life	> 50000H
Color Temperature	6000k/4000k/3000k	THD	< 15%
Luminous Flux	1100lm	Frequency Range	50/60HZ
Input Voltage	AC100~277V	Lnstallation Pipe Diameter	/
Protection Grade	IP65	CRI	> 90
Operating Temperature	-30~50℃		

DM-BC103a

Standard colours

9004 9006 9007 9016

Bollard light

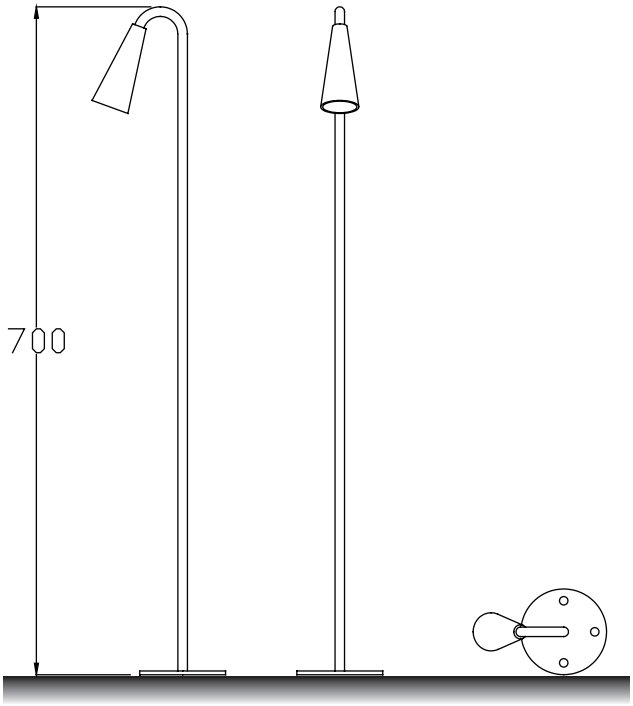

Installation plate

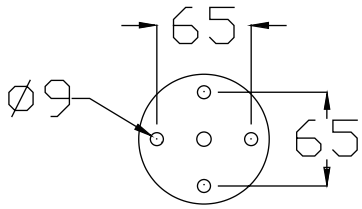

DM-BC104a

Colo(u)r temperature

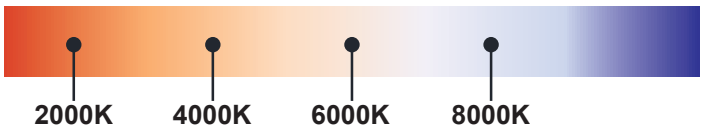

Bollard light

IP65

Rated power	12W	Power Factor	> 0.9
LED Quantity	1pcs	Life	> 50000H
Color Temperature	6000k/4000k/3000k	THD	< 15%
Luminous Flux	1100lm	Frequency Range	50/60HZ
Input Voltage	AC100~277V	Lnstallation Pipe Diameter	/
Protection Grade	IP65	CRI	> 90
Operating Temperature	-30~50℃		

DM-BC104a

Standard colours

9004 9006 9007 9016

Bollard light

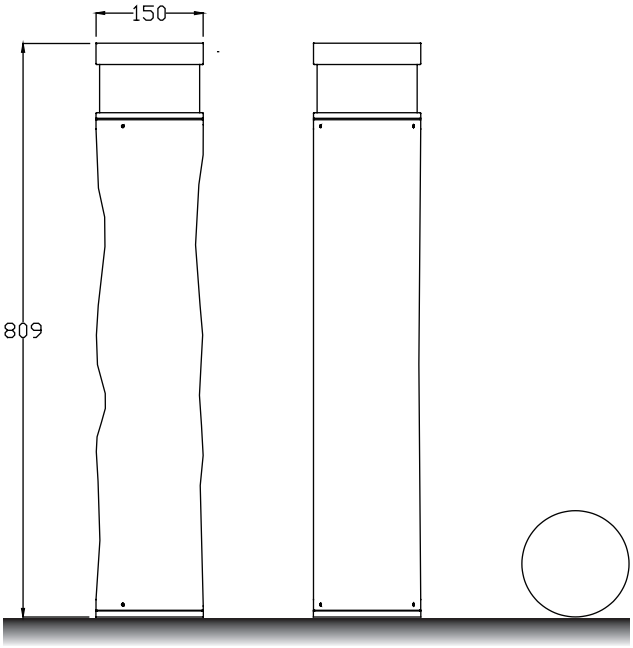

Installation plate

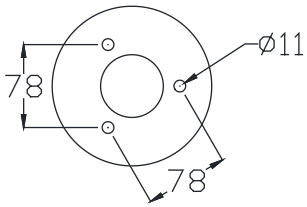

DM-BC105a

Colo(u)r temperature

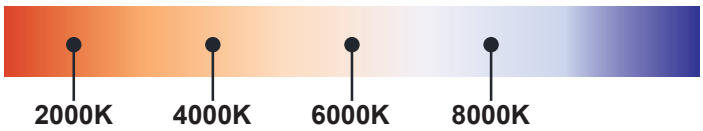

Bollard light

IP65

Rated power	12W	Power Factor	> 0.9
LED Quantity	1pcs	Life	> 50000H
Color Temperature	6000k/4000k/3000k	THD	< 15%
Luminous Flux	1100lm	Frequency Range	50/60HZ
Input Voltage	AC100~277V	Lnstallation Pipe Diameter	/
Protection Grade	IP65	CRI	> 90
Operating Temperature	-30~50℃		

DM-BC105a

Standard colours

9004 9006 9007 9016

Bollard light

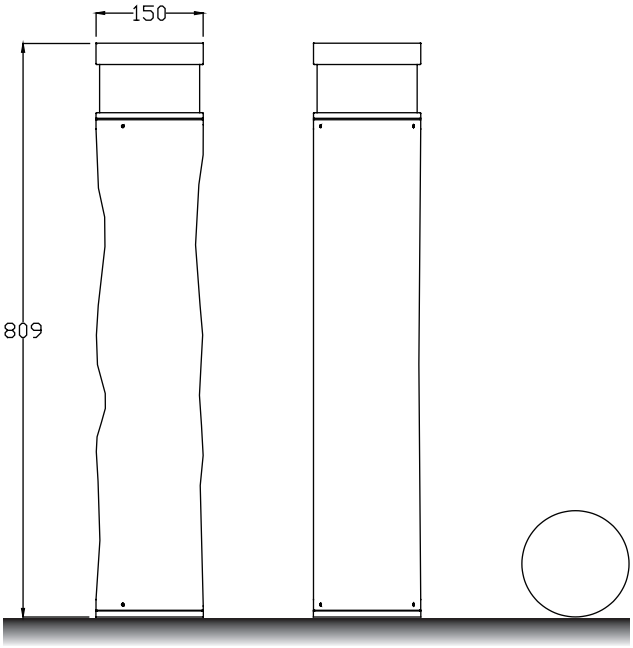

Installation plate

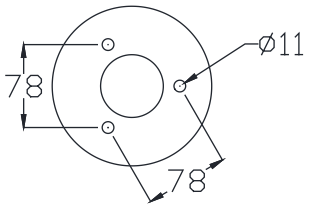

DM-BC106a

Colo(u)r temperature

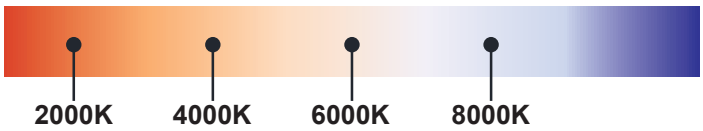

Bollard light

IP65

Rated power	12W	Power Factor	> 0.9
LED Quantity	1pcs	Life	> 50000H
Color Temperature	6000k/4000k/3000k	THD	< 15%
Luminous Flux	1100lm	Frequency Range	50/60HZ
Input Voltage	AC100~277V	Lnstallation Pipe Diameter	/
Protection Grade	IP65	CRI	> 90
Operating Temperature	-30~50℃		

DM-BC106a

Standard colours

9004 9006 9007 9016

Bollard light

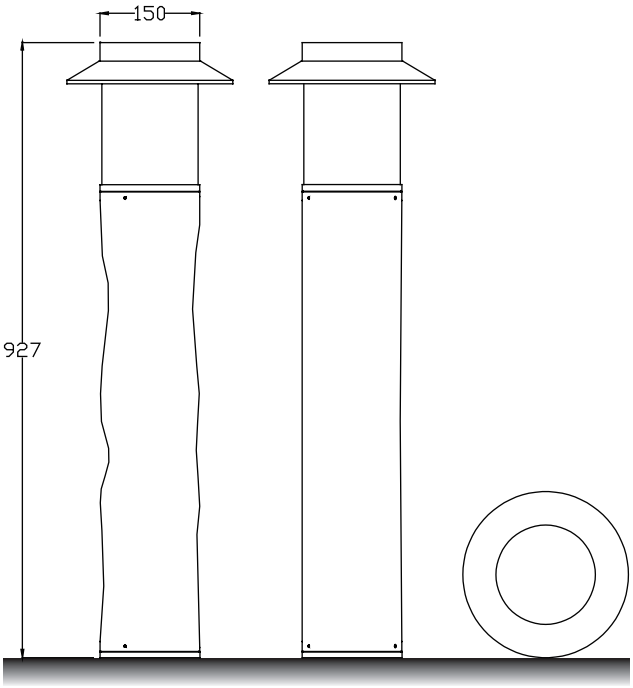

Installation plate

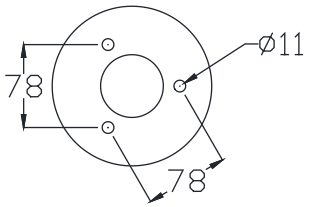

DM-BC107a

Colo(u)r temperature

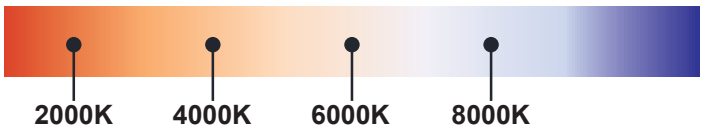

Bollard light

IP65

Rated power	12W	Power Factor	> 0.9
LED Quantity	1pcs	Life	> 50000H
Color Temperature	6000k/4000k/3000k	THD	< 15%
Luminous Flux	1100lm	Frequency Range	50/60HZ
Input Voltage	AC100~277V	Lnstallation Pipe Diameter	/
Protection Grade	IP65	CRI	> 90
Operating Temperature	-30~50℃		

DM-BC107a

Standard colours

9004 9006 9007 9016

Bollard light

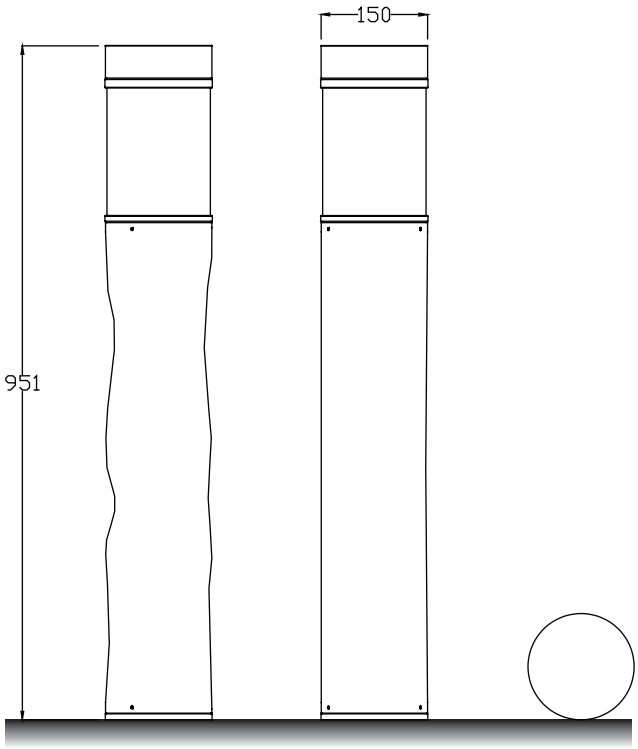

Installation plate

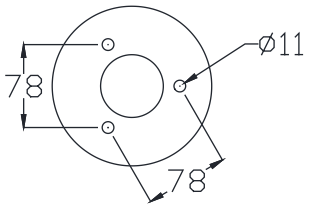

DM-BC108a

Colo(u)r temperature

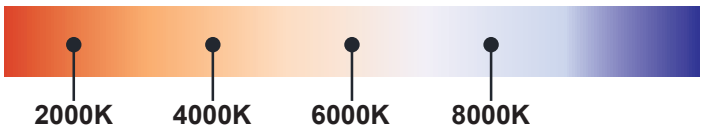

Bollard light

IP65

Rated power	12W	Power Factor	> 0.9
LED Quantity	1pcs	Life	> 50000H
Color Temperature	6000k/4000k/3000k	THD	< 15%
Luminous Flux	1100lm	Frequency Range	50/60HZ
Input Voltage	AC100~277V	Lnstallation Pipe Diameter	/
Protection Grade	IP65	CRI	> 90
Operating Temperature	-30~50℃		

DM-BC108a

Standard colours

9004 9006 9007 9016

Bollard light

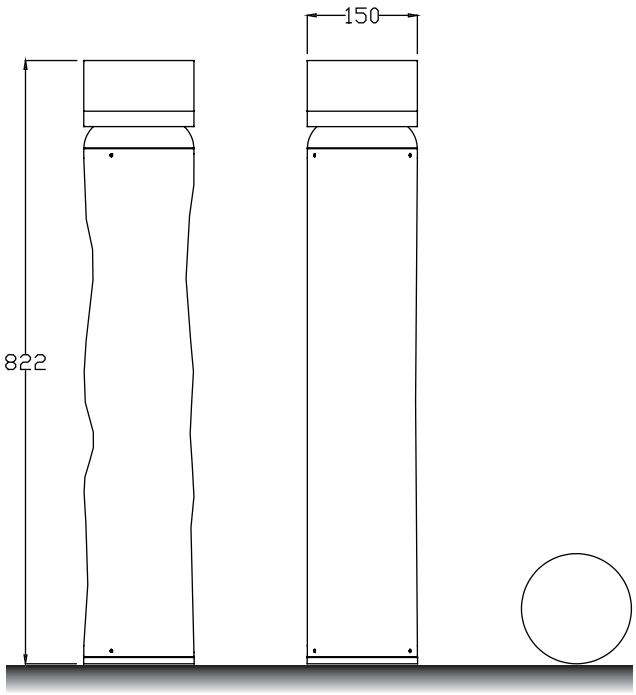

Installation plate

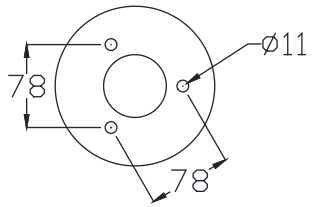

DM-BC109a

Colo(u)r temperature

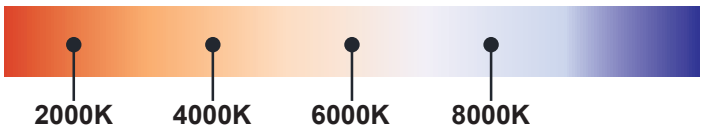

Bollard light

IP65

Rated power	12W	Power Factor	> 0.9
LED Quantity	1pcs	Life	> 50000H
Color Temperature	6000k/4000k/3000k	THD	< 15%
Luminous Flux	1100lm	Frequency Range	50/60HZ
Input Voltage	AC100~277V	Lnstallation Pipe Diameter	/
Protection Grade	IP65	CRI	> 90
Operating Temperature	-30~50℃		

DM-BC109a

Standard colours

9004 9006 9007 9016

Bollard light

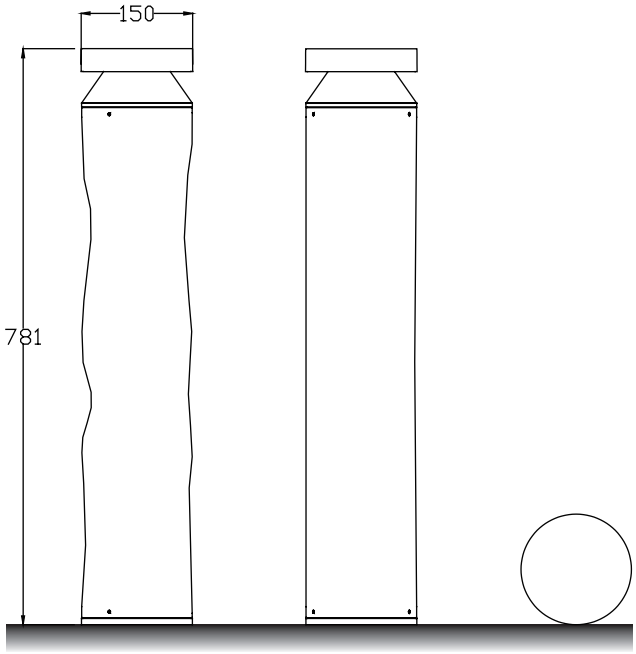

Installation plate

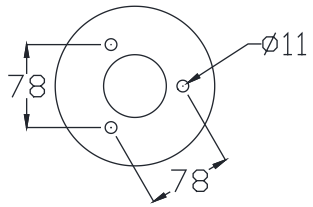

DM-BC110a

Colo(u)r temperature

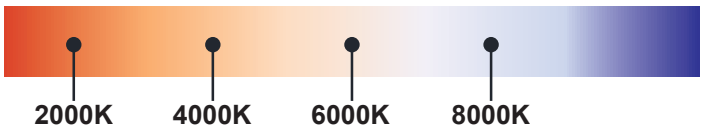

Bollard light

IP65

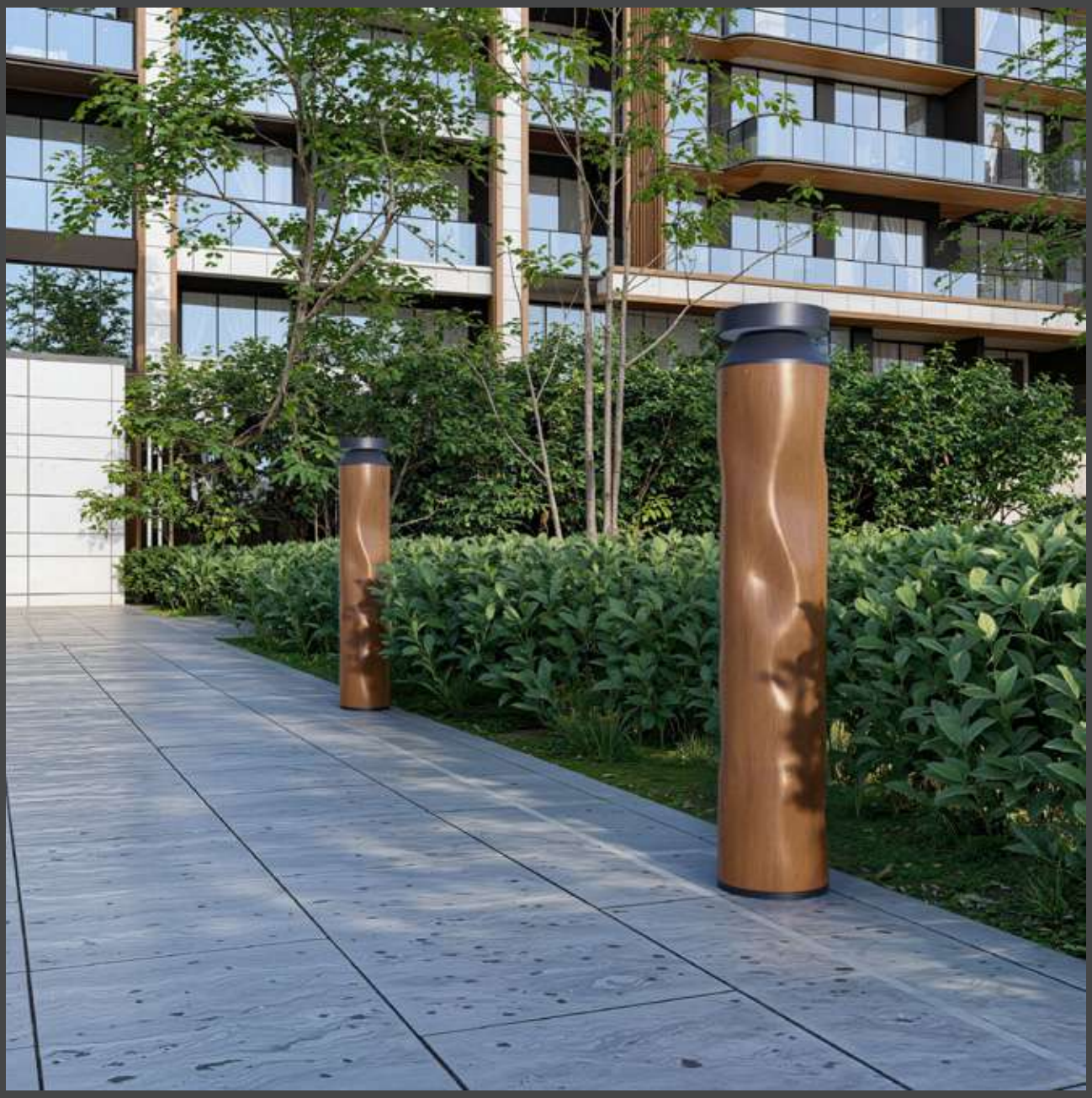

Rated power	12W	Power Factor	> 0.9
LED Quantity	1pcs	Life	> 50000H
Color Temperature	6000k/4000k/3000k	THD	< 15%
Luminous Flux	1100lm	Frequency Range	50/60HZ
Input Voltage	AC100~277V	Lnstallation Pipe Diameter	/
Protection Grade	IP65	CRI	> 90
Operating Temperature	-30~50℃		

DM-BC110a

Standard colours

9004 9006 9007 9016

Bollard light

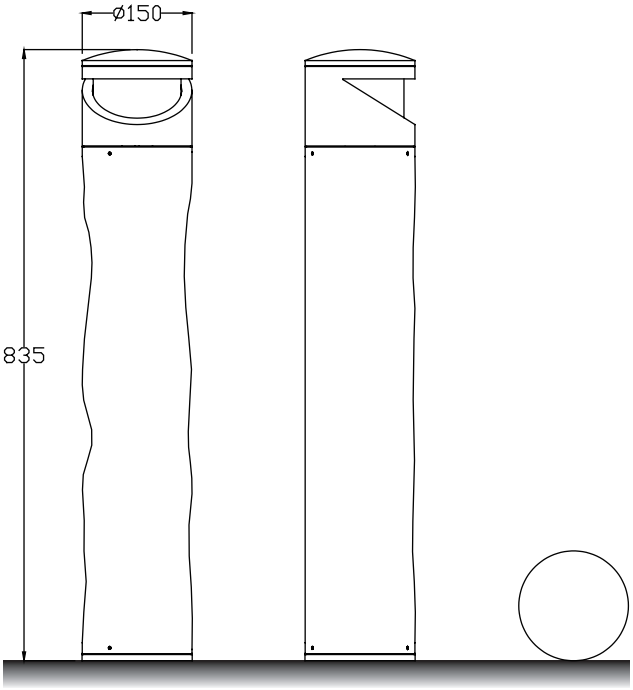

Installation plate

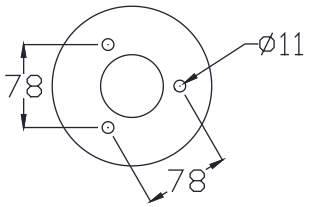

DM–BC111a

Colo(u)r temperature

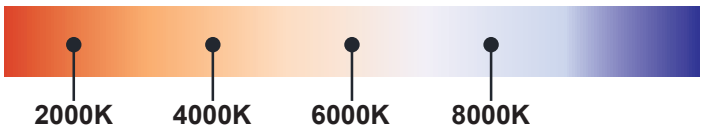

Bollard light

IP65

Rated power	12W	Power Factor	> 0.9
LED Quantity	1pcs	Life	> 50000H
Color Temperature	6000k/4000k/3000k	THD	< 15%
Luminous Flux	1100lm	Frequency Range	50/60HZ
Input Voltage	AC100~277V	Lnstallation Pipe Diameter	/
Protection Grade	IP65	CRI	> 90
Operating Temperature	-30~50℃		

DM-BC111a

Standard colours

9004 9006 9007 9016

Bollard light

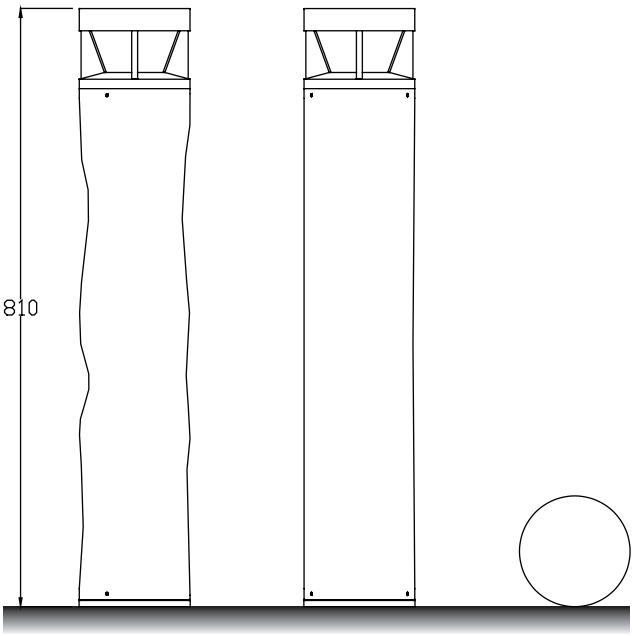

Installation plate

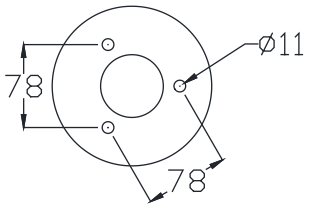

DM-BC112a

Colo(u)r temperature

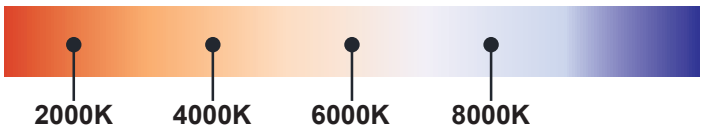

Bollard light

IP65

Rated power	12W	Power Factor	> 0.9
LED Quantity	1pcs	Life	> 50000H
Color Temperature	6000k/4000k/3000k	THD	< 15%
Luminous Flux	1100lm	Frequency Range	50/60HZ
Input Voltage	AC100~277V	Lnstallation Pipe Diameter	/
Protection Grade	IP65	CRI	> 90
Operating Temperature	-30~50℃		

DM-BC112a

Standard colours

9004 9006 9007 9016

Bollard light

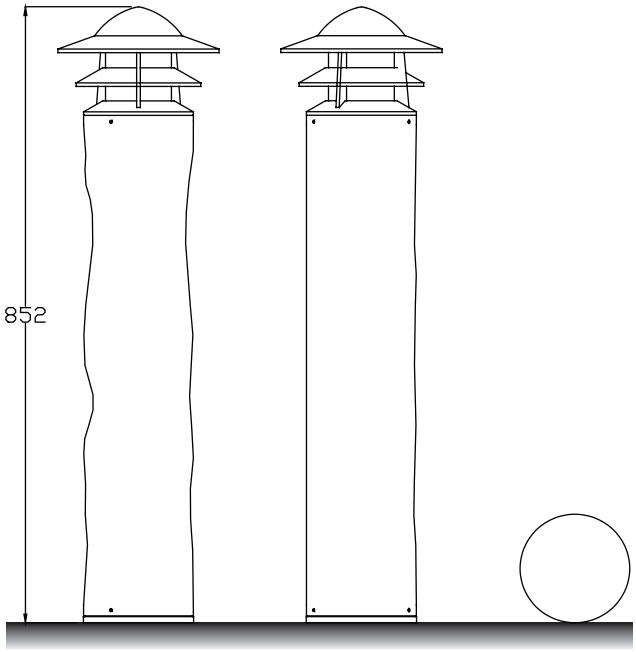

Installation plate

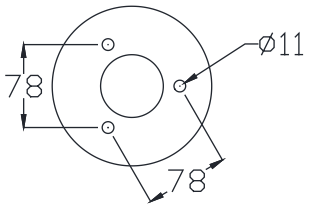

DM-BC113a

Colo(u)r temperature

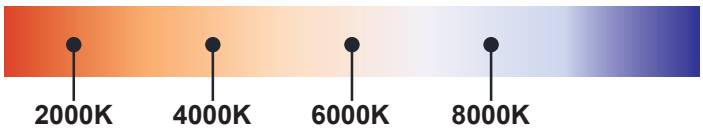

Bollard light

IP65

Rated power	12W	Power Factor	> 0.9
LED Quantity	1pcs	Life	> 50000H
Color Temperature	6000k/4000k/3000k	THD	< 15%
Luminous Flux	1100lm	Frequency Range	50/60HZ
Input Voltage	AC100~277V	Lnstallation Pipe Diameter	/
Protection Grade	IP65	CRI	> 90
Operating Temperature	-30~50℃		

DM-BC113a

Standard colours

9004 9006 9007 9016

Bollard light

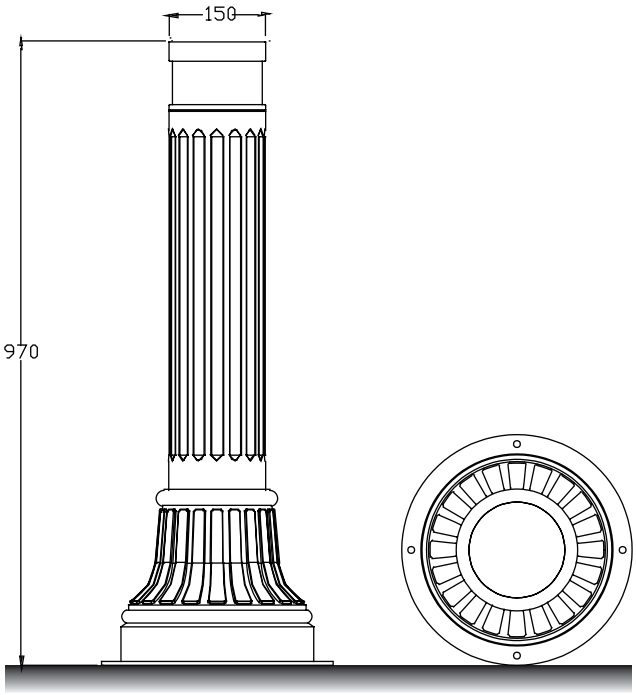

Installation plate

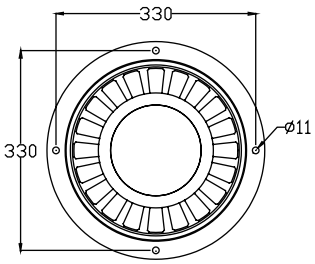

DM–BC114a

Colo(u)r temperature

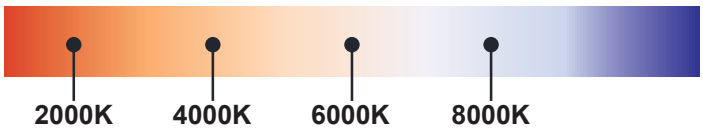

Bollard light

IP65

Rated power	12W	Power Factor	> 0.9
LED Quantity	1pcs	Life	> 50000H
Color Temperature	6000k/4000k/3000k	THD	< 15%
Luminous Flux	1100lm	Frequency Range	50/60HZ
Input Voltage	AC100~277V	Lnstallation Pipe Diameter	/
Protection Grade	IP65	CRI	> 90
Operating Temperature	-30~50℃		

DM-BC114a

Standard colours

9004 9006 9007 9016

Bollard light

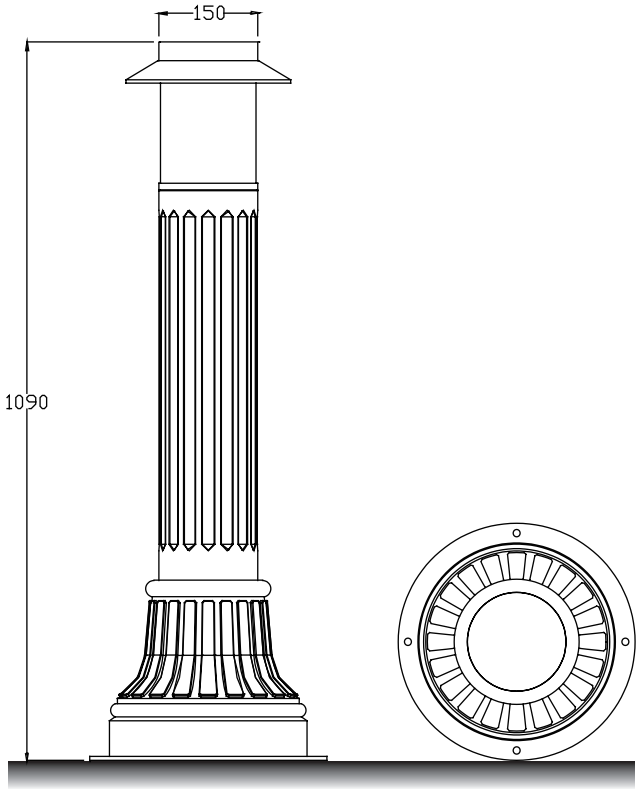

DM–BC115a

Installation plate

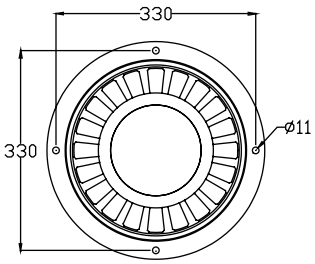

Colo(u)r temperature

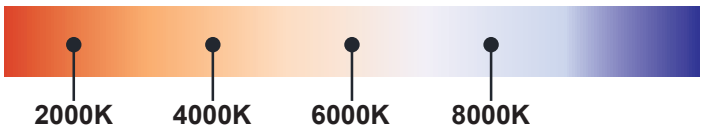

Bollard light

IP65

Rated power	12W	Power Factor	> 0.9
LED Quantity	1pcs	Life	> 50000H
Color Temperature	6000k/4000k/3000k	THD	< 15%
Luminous Flux	1100lm	Frequency Range	50/60HZ
Input Voltage	AC100~277V	Lnstallation Pipe Diameter	/
Protection Grade	IP65	CRI	> 90
Operating Temperature	-30~50℃		

DM-BC115a

Standard colours

9004 9006 9007 9016

Bollard light

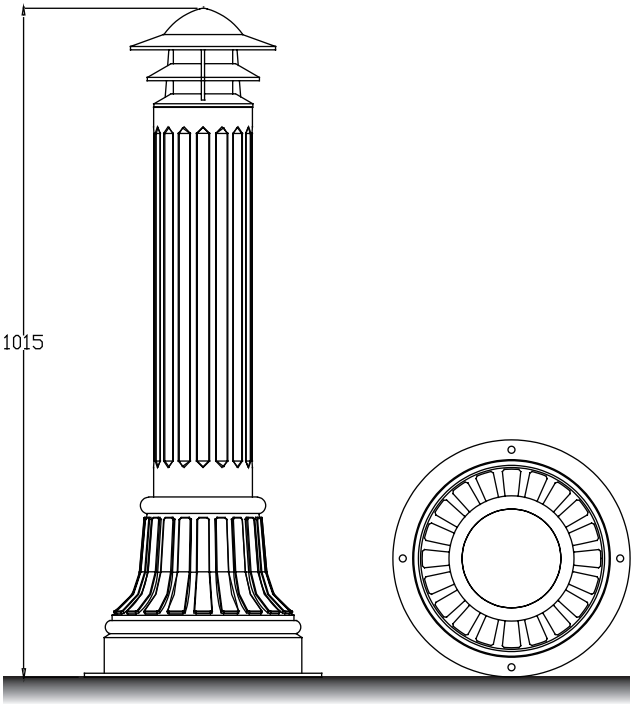

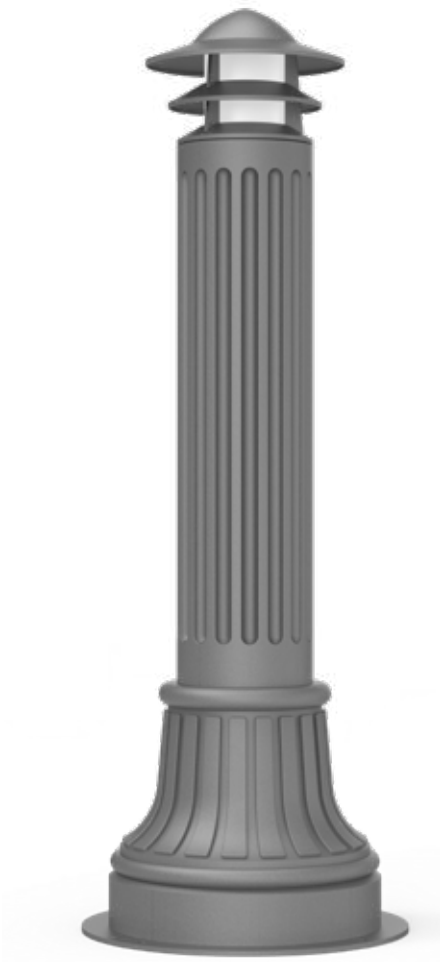

DM-BC116a

Installation plate

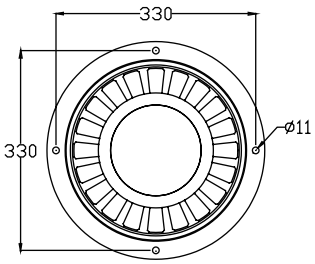

Colo(u)r temperature

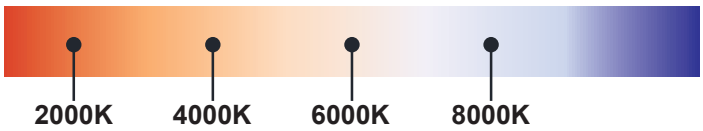

Bollard light

IP65

Rated power	12W	Power Factor	> 0.9
LED Quantity	1pcs	Life	> 50000H
Color Temperature	6000k/4000k/3000k	THD	< 15%
Luminous Flux	1100lm	Frequency Range	50/60HZ
Input Voltage	AC100~277V	Lnstallation Pipe Diameter	/
Protection Grade	IP65	CRI	> 90
Operating Temperature	-30~50℃		

DM-BC116a

Standard colours

9004 9006 9007 9016

Bollard light

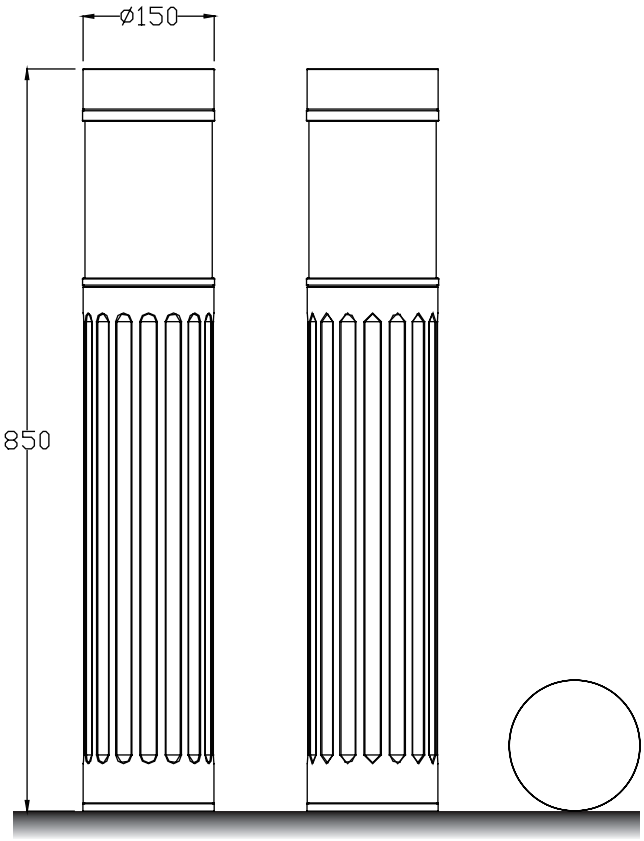

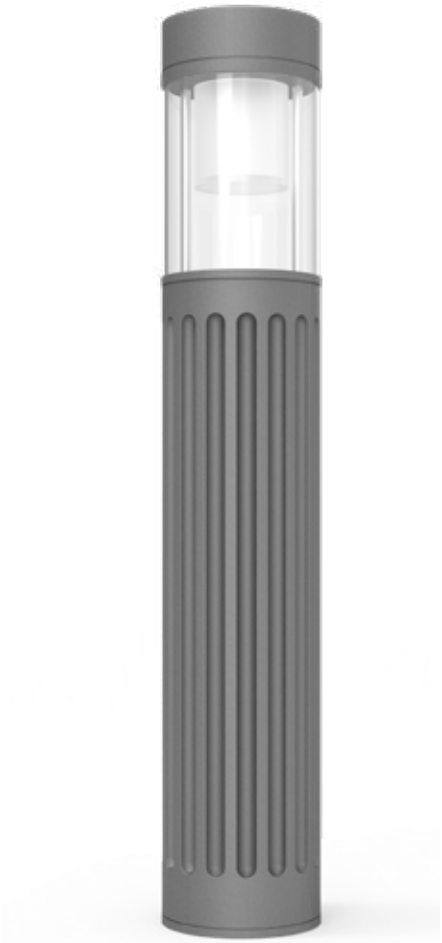

Installation plate

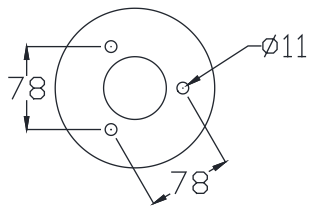

DM-BC117a

Colo(u)r temperature

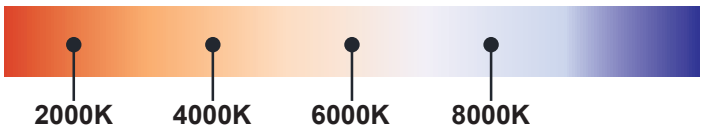

Bollard light

IP65

Rated power	12W	Power Factor	> 0.9
LED Quantity	1pcs	Life	> 50000H
Color Temperature	6000k/4000k/3000k	THD	< 15%
Luminous Flux	1100lm	Frequency Range	50/60HZ
Input Voltage	AC100~277V	Lnstallation Pipe Diameter	/
Protection Grade	IP65	CRI	> 90
Operating Temperature	-30~50℃		

DM-BC117a

Standard colours

9004 9006 9007 9016

Bollard light

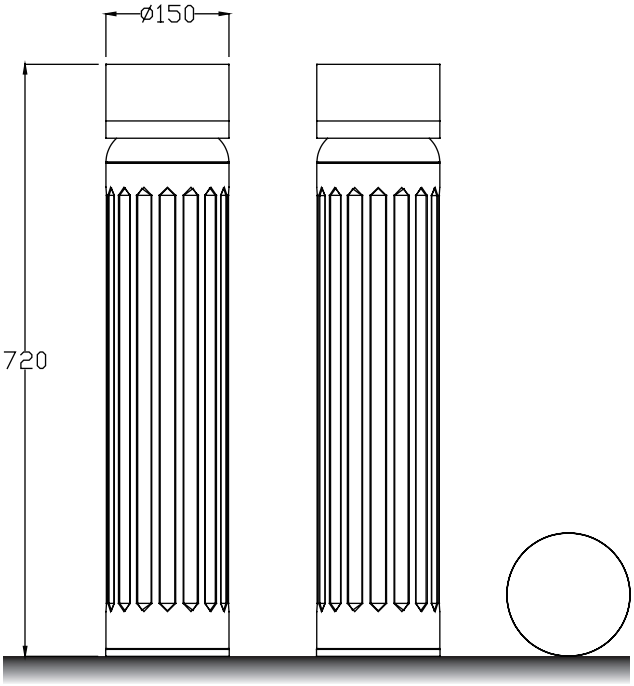

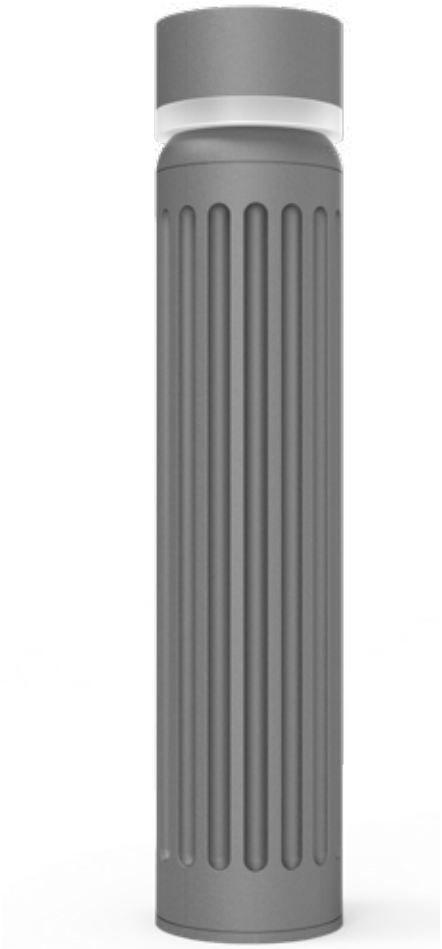

Installation plate

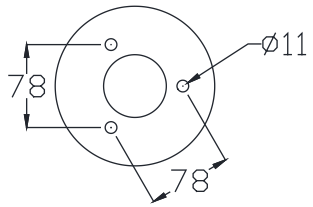

DM-BC118a

Colo(u)r temperature

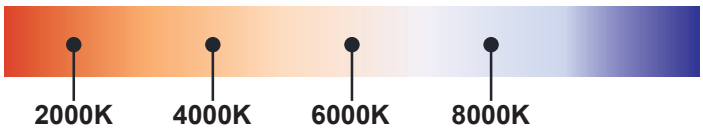

Bollard light

IP65

Rated power	12W	Power Factor	> 0.9
LED Quantity	1pcs	Life	> 50000H
Color Temperature	6000k/4000k/3000k	THD	< 15%
Luminous Flux	1100lm	Frequency Range	50/60HZ
Input Voltage	AC100~277V	Lnstallation Pipe Diameter	/
Protection Grade	IP65	CRI	> 90
Operating Temperature	-30~50℃		

DM-BC118a

Standard colours

9004 9006 9007 9016

Bollard light

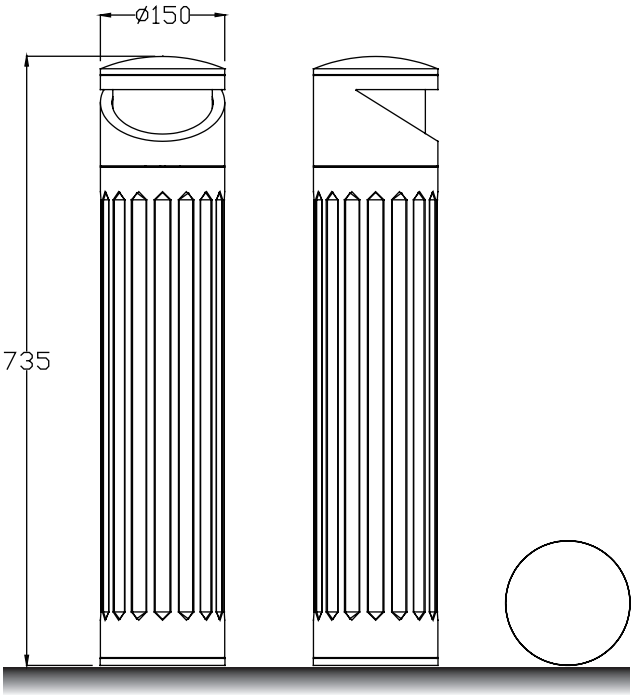

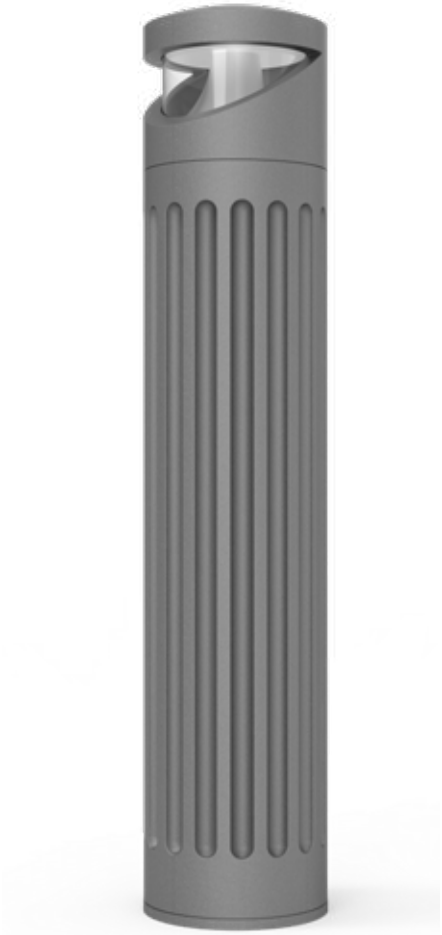

Installation plate

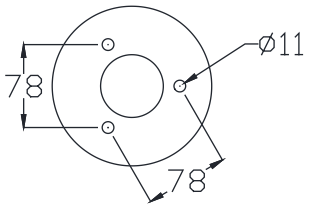

DM-BC119a

Colo(u)r temperature

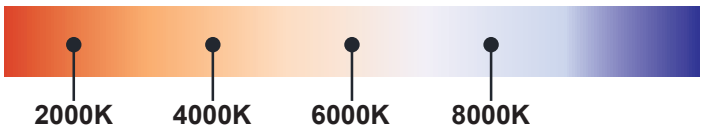

Bollard light

IP65

Rated power	12W	Power Factor	> 0.9
LED Quantity	1pcs	Life	> 50000H
Color Temperature	6000k/4000k/3000k	THD	< 15%
Luminous Flux	1100lm	Frequency Range	50/60HZ
Input Voltage	AC100~277V	Lnstallation Pipe Diameter	/
Protection Grade	IP65	CRI	> 90
Operating Temperature	-30~50℃		

DM-BC119a

Standard colours

9004 9006 9007 9016

Bollard light

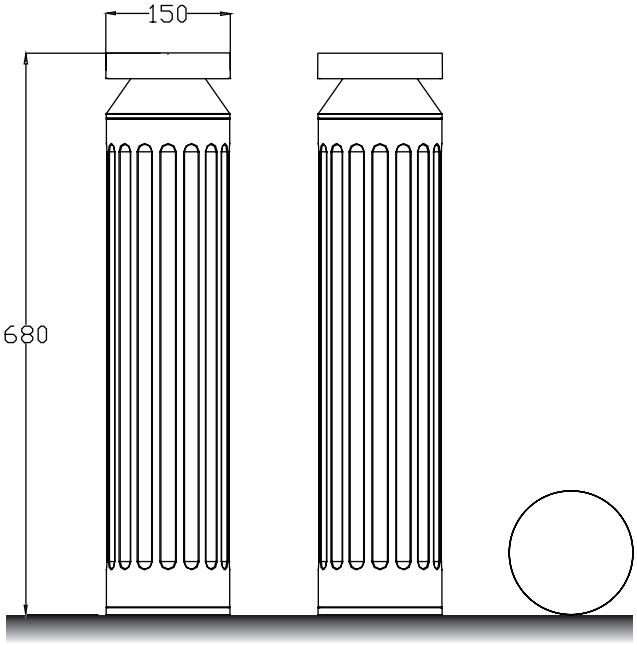

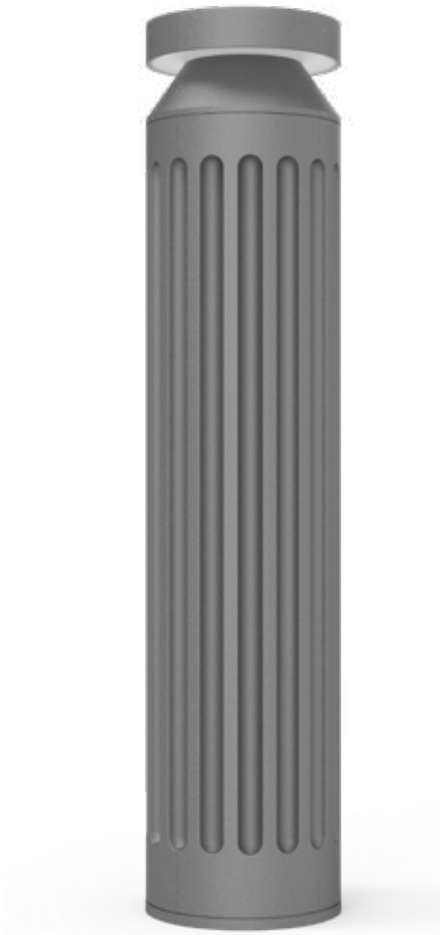

Installation plate

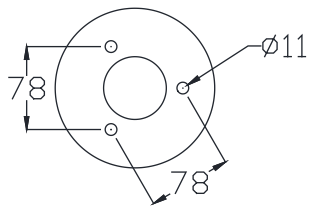

DM-BC120a

Colo(u)r temperature

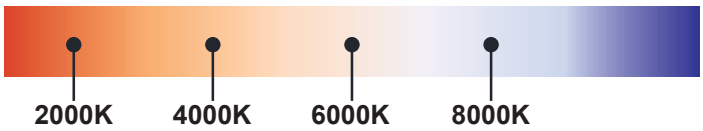

Bollard light

IP65

Rated power	12W	Power Factor	> 0.9
LED Quantity	1pcs	Life	> 50000H
Color Temperature	6000k/4000k/3000k	THD	< 15%
Luminous Flux	1100lm	Frequency Range	50/60HZ
Input Voltage	AC100~277V	Lnstallation Pipe Diameter	/
Protection Grade	IP65	CRI	> 90
Operating Temperature	-30~50℃		

DM-BC120a

Standard colours

9004 9006 9007 9016

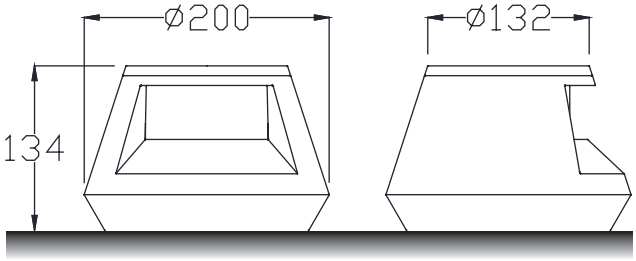

Installation plate

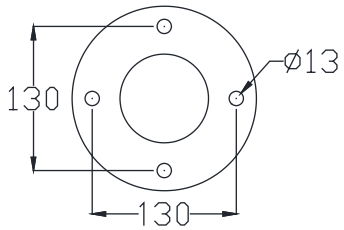

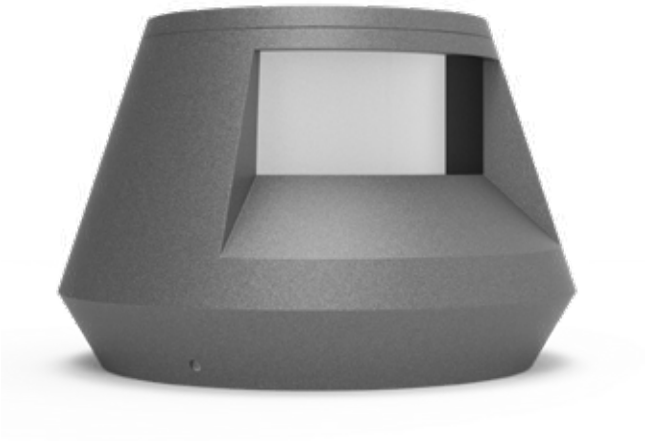

Colo(u)r temperature

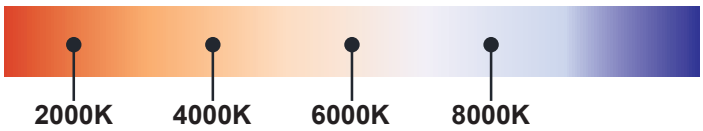

Bollard light

IP65

Rated power	12W	Power Factor	> 0.9
LED Quantity	1pcs	Life	> 50000H
Color Temperature	6000k/4000k/3000k	THD	< 15%
Luminous Flux	1100lm	Frequency Range	50/60HZ
Input Voltage	AC100~277V	Lnstallation Pipe Diameter	/
Protection Grade	IP65	CRI	> 90
Operating Temperature	-30~50℃		

DM-LR1a

Standard colours

9004 9006 9007 9016

Bollard light

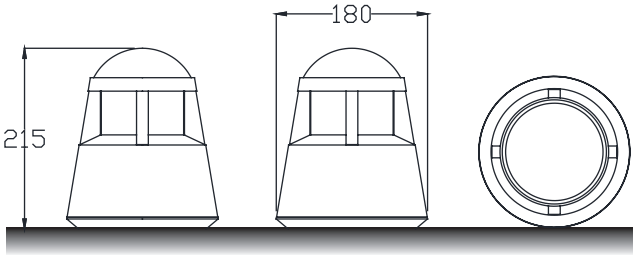

Installation plate

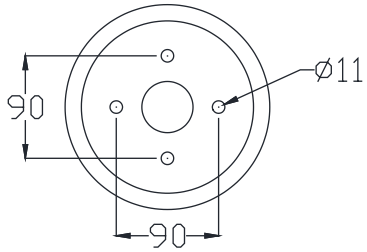

DM–LR2a

Colo(u)r temperature

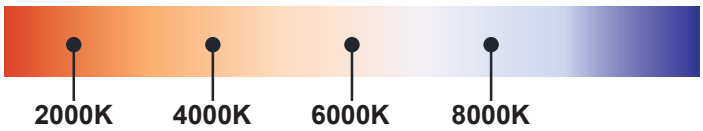

Bollard light

IP65

Rated power	12W	Power Factor	> 0.9
LED Quantity	1pcs	Life	> 50000H
Color Temperature	6000k/4000k/3000k	THD	< 15%
Luminous Flux	1100lm	Frequency Range	50/60HZ
Input Voltage	AC100~277V	Lnstallation Pipe Diameter	/
Protection Grade	IP65	CRI	> 90
Operating Temperature	-30~50℃		

DM-LR2a

Standard colours

9004 9006 9007 9016

Bollard light

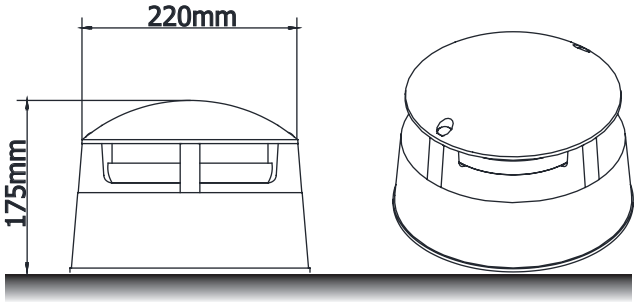

Installation plate

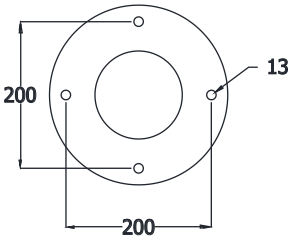

DM–LR3a

Colo(u)r temperature

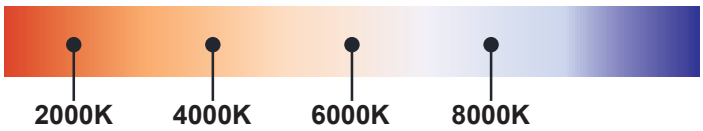

Bollard light

IP65

Rated power	12W	Power Factor	> 0.9
LED Quantity	1pcs	Life	> 50000H
Color Temperature	6000k/4000k/3000k	THD	< 15%
Luminous Flux	1100lm	Frequency Range	50/60HZ
Input Voltage	AC100~277V	Lnstallation Pipe Diameter	/
Protection Grade	IP65	CRI	> 90
Operating Temperature	-30~50℃		

DM-LR3a

Standard colours

9004 9006 9007 9016

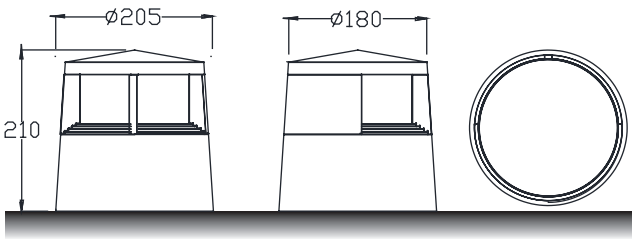

Installation plate

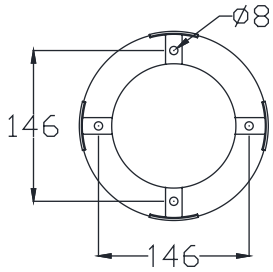

DM–LR4a

Colo(u)r temperature

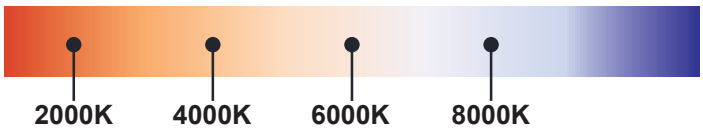

Bollard light

IP65

Rated power	12W	Power Factor	＞ 0.9
LED Quantity	1pcs	Life	＞ 50000H
Color Temperature	6000k/4000k/3000k	THD	＜ 15%
Luminous Flux	1100lm	Frequency Range	50/60HZ
Input Voltage	AC100~277V	Lnstallation Pipe Diameter	/
Protection Grade	IP65	CRI	＞ 90
Operating Temperature	-30~50℃		

DM-LR4a

Standard colours

9004 9006 9007 9016

Bollard light

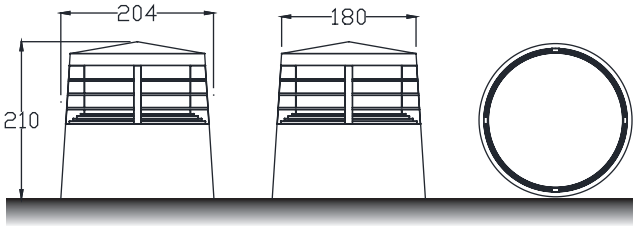

Installation plate

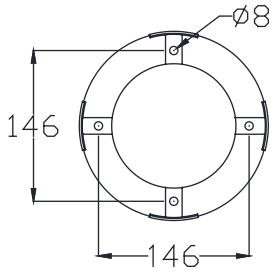

DM–LR5a

Colo(u)r temperature

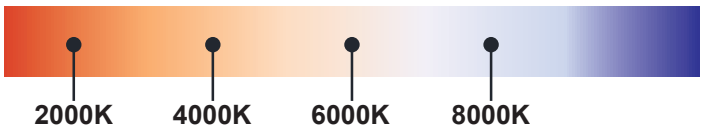

Bollard light

IP65

Rated power	12W	Power Factor	> 0.9
LED Quantity	1pcs	Life	> 50000H
Color Temperature	6000k/4000k/3000k	THD	< 15%
Luminous Flux	1100lm	Frequency Range	50/60HZ
Input Voltage	AC100~277V	Lnstallation Pipe Diameter	/
Protection Grade	IP65	CRI	> 90
Operating Temperature	-30~50℃		

DM-LR5a

Standard colours

9004 9006 9007 9016

Bollard light

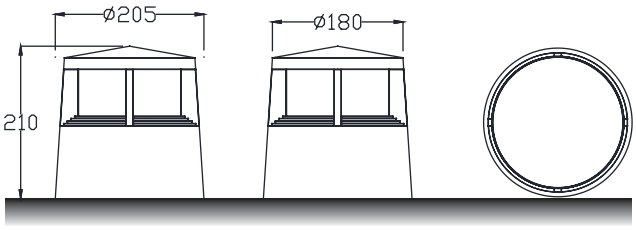

Installation plate

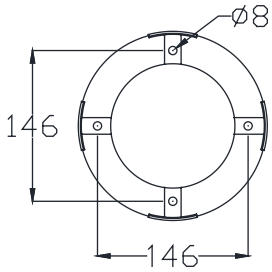

DM–LR6a

Colo(u)r temperature

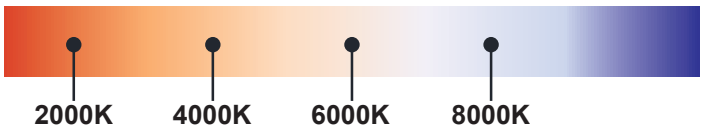

Bollard light

IP65

Rated power	12W	Power Factor	> 0.9
LED Quantity	1pcs	Life	> 50000H
Color Temperature	6000k/4000k/3000k	THD	< 15%
Luminous Flux	1100lm	Frequency Range	50/60HZ
Input Voltage	AC100~277V	Lnstallation Pipe Diameter	/
Protection Grade	IP65	CRI	> 90
Operating Temperature	-30~50℃		

DM-LR6a

Standard colours

9004 9006 9007 9016

Bollard light

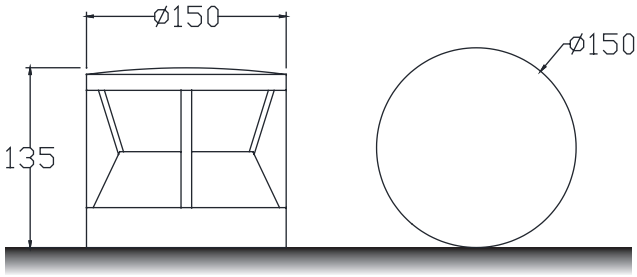

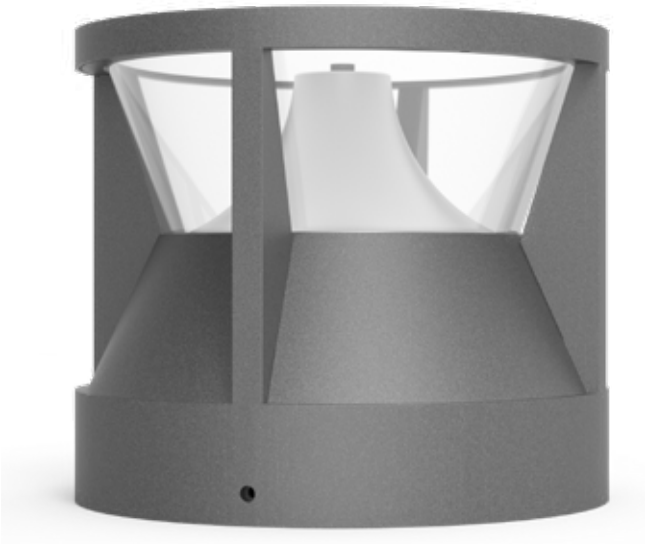

Installation plate

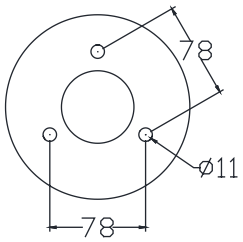

DM–LR7a

Colo(u)r temperature

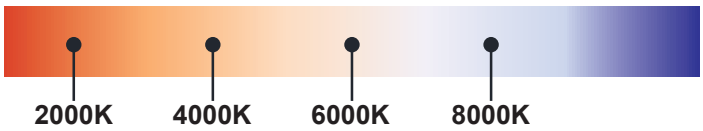

Bollard light

IP65

Rated power	12W	Power Factor	> 0.9
LED Quantity	1pcs	Life	> 50000H
Color Temperature	6000k/4000k/3000k	THD	< 15%
Luminous Flux	1100lm	Frequency Range	50/60HZ
Input Voltage	AC100~277V	Lnstallation Pipe Diameter	/
Protection Grade	IP65	CRI	> 90
Operating Temperature	-30~50℃		

DM-LR7a

Standard colours

9004 9006 9007 9016

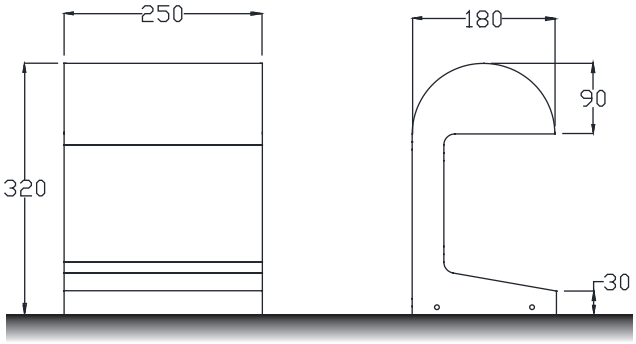

Installation plate

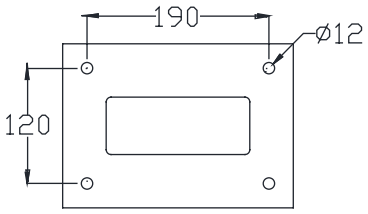

DM–LR8a

Colo(u)r temperature

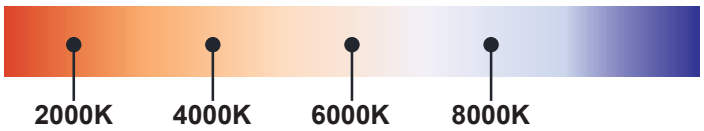

Bollard light

IP65

Rated power	12W	Power Factor	> 0.9
LED Quantity	1pcs	Life	> 50000H
Color Temperature	6000k/4000k/3000k	THD	< 15%
Luminous Flux	1100lm	Frequency Range	50/60HZ
Input Voltage	AC100~277V	Lnstallation Pipe Diameter	/
Protection Grade	IP65	CRI	> 90
Operating Temperature	-30~50℃		

DM-LR8a

Standard colours

9004 9006 9007 9016

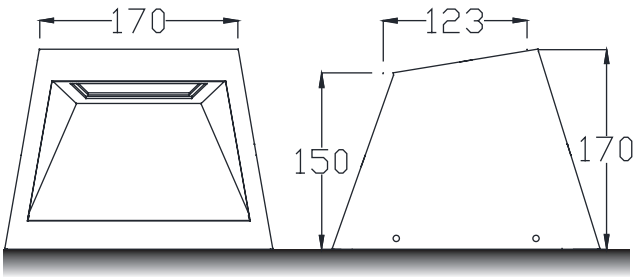

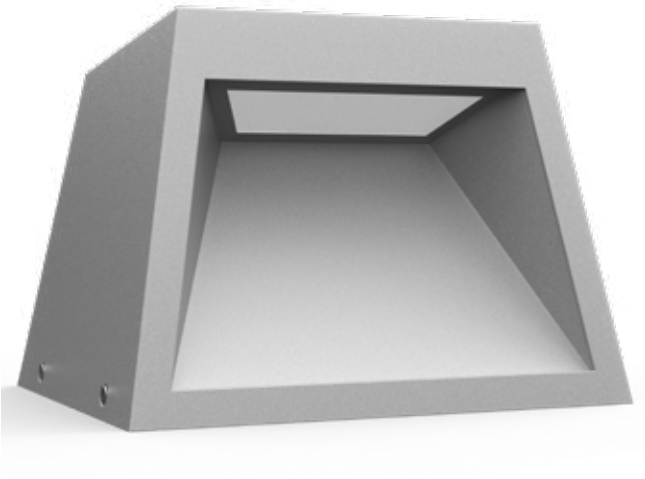

Installation plate

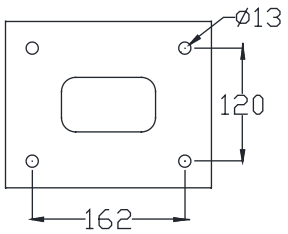

Colo(u)r temperature

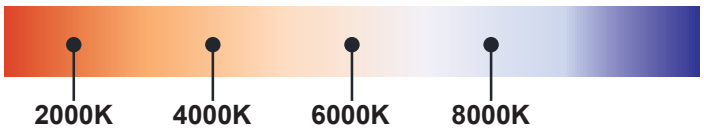

Bollard light

IP65

Rated power	12W	Power Factor	> 0.9
LED Quantity	1pcs	Life	> 50000H
Color Temperature	6000k/4000k/3000k	THD	< 15%
Luminous Flux	1100lm	Frequency Range	50/60HZ
Input Voltage	AC100~277V	Lnstallation Pipe Diameter	/
Protection Grade	IP65	CRI	> 90
Operating Temperature	-30~50℃		

DM-LR9a

Standard colours

9004 9006 9007 9016

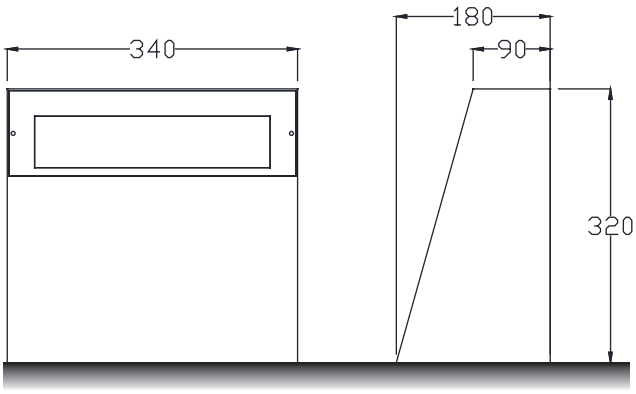

Installation plate

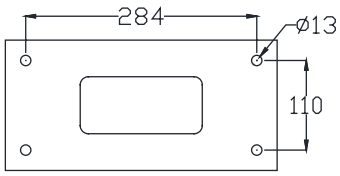

DM–LR10a

Colo(u)r temperature

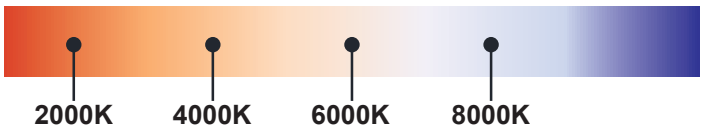

Bollard light

IP65

Rated power	12W	Power Factor	> 0.9
LED Quantity	1pcs	Life	> 50000H
Color Temperature	6000k/4000k/3000k	THD	< 15%
Luminous Flux	1100lm	Frequency Range	50/60HZ
Input Voltage	AC100~277V	Lnstallation Pipe Diameter	/
Protection Grade	IP65	CRI	> 90
Operating Temperature	-30~50℃		

DM-LR10a

Standard colours

9004 9006 9007 9016

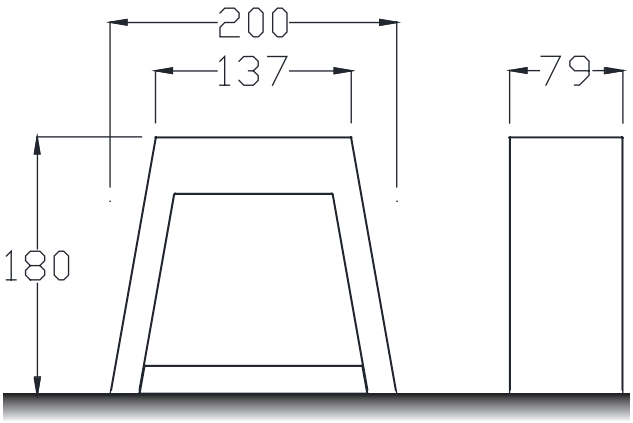

Installation plate

DM–LR11a

Colo(u)r temperature

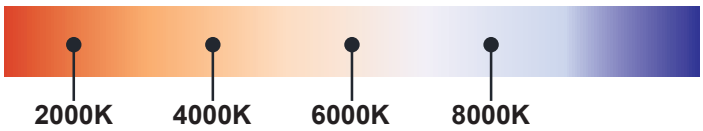

Bollard light

IP65

Rated power	12W	Power Factor	> 0.9
LED Quantity	1pcs	Life	> 50000H
Color Temperature	6000k/4000k/3000k	THD	< 15%
Luminous Flux	1100lm	Frequency Range	50/60HZ
Input Voltage	AC100~277V	Lnstallation Pipe Diameter	/
Protection Grade	IP65	CRI	> 90
Operating Temperature	-30~50℃		

DM-LR11a

Standard colours

9004 9006 9007 9016

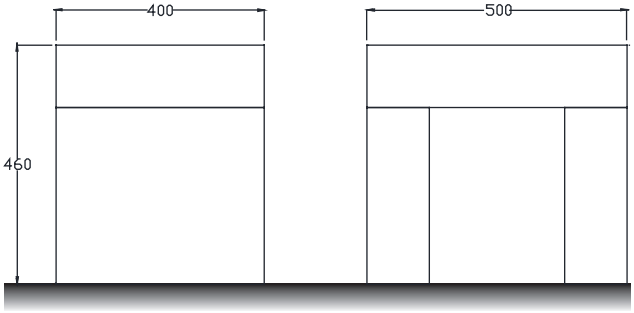

Installation plate

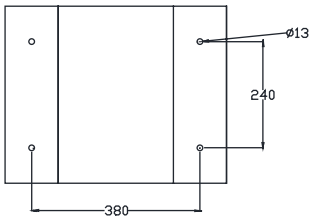

DM–LR12a

Colo(u)r temperature

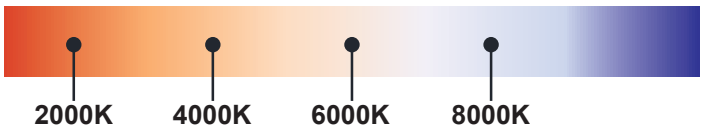

Bollard light

IP65

Rated power	12W	Power Factor	> 0.9
LED Quantity	1pcs	Life	> 50000H
Color Temperature	6000k/4000k/3000k	THD	< 15%
Luminous Flux	1100lm	Frequency Range	50/60HZ
Input Voltage	AC100~277V	Lnstallation Pipe Diameter	/
Protection Grade	IP65	CRI	> 90
Operating Temperature	-30~50℃		

DM-LR12a

Standard colours

9004 9006 9007 9016

Bollard light

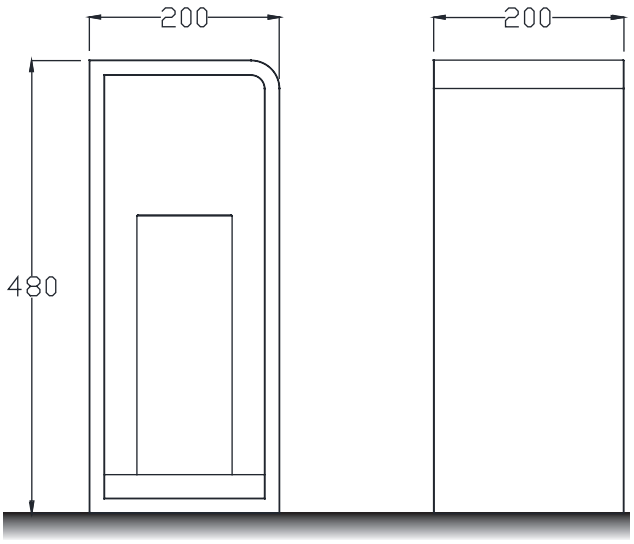

Installation plate

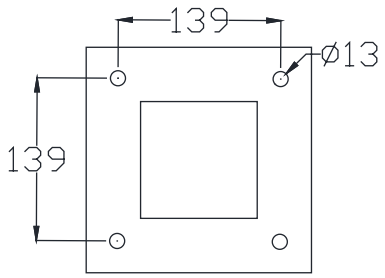

DM–LR13a

Colo(u)r temperature

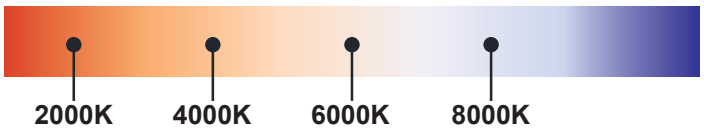

Bollard light

IP65

Rated power	12W	Power Factor	> 0.9
LED Quantity	1pcs	Life	> 50000H
Color Temperature	6000k/4000k/3000k	THD	< 15%
Luminous Flux	1100lm	Frequency Range	50/60HZ
Input Voltage	AC100~277V	Lnstallation Pipe Diameter	/
Protection Grade	IP65	CRI	> 90
Operating Temperature	-30~50℃		

DM-LR13a

Standard colours

9004 9006 9007 9016

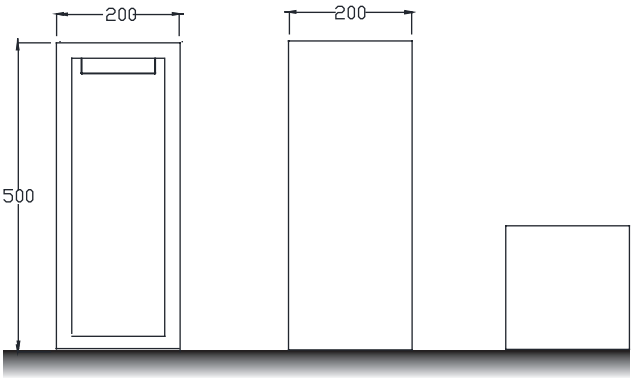

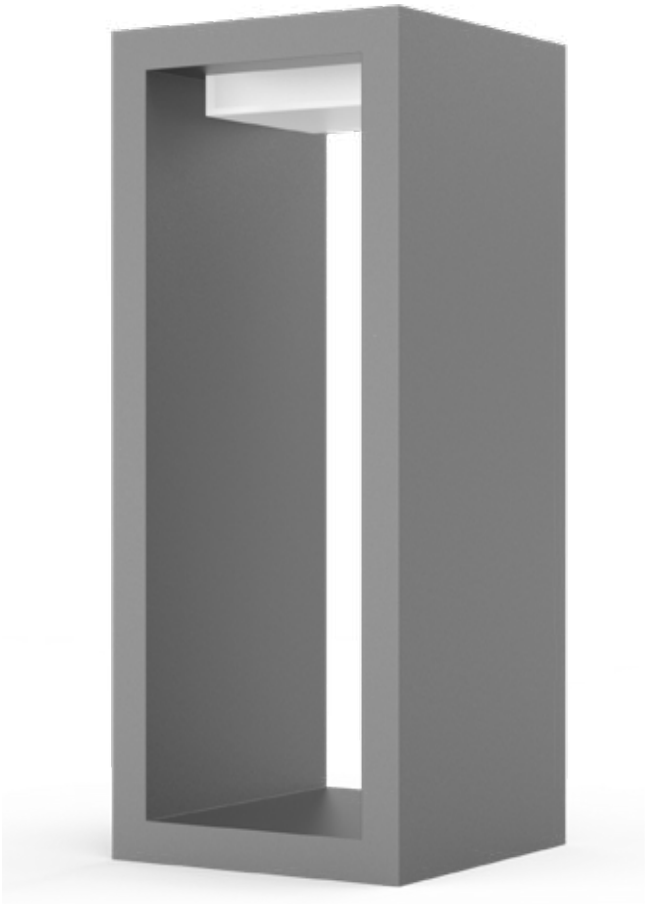

Installation plate

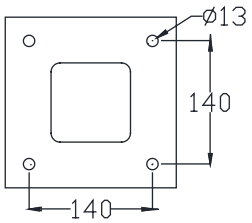

DM–LR14a

Colo(u)r temperature

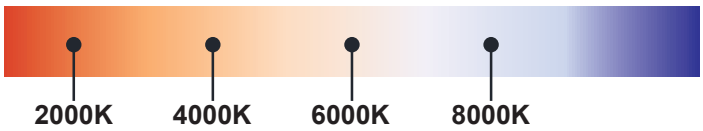

Bollard light

IP65

Rated power	12W	Power Factor	> 0.9
LED Quantity	1pcs	Life	> 50000H
Color Temperature	6000k/4000k/3000k	THD	< 15%
Luminous Flux	1100lm	Frequency Range	50/60HZ
Input Voltage	AC100~277V	Lnstallation Pipe Diameter	/
Protection Grade	IP65	CRI	> 90
Operating Temperature	-30~50℃		

DM-LR14a

Standard colours

9004 9006 9007 9016

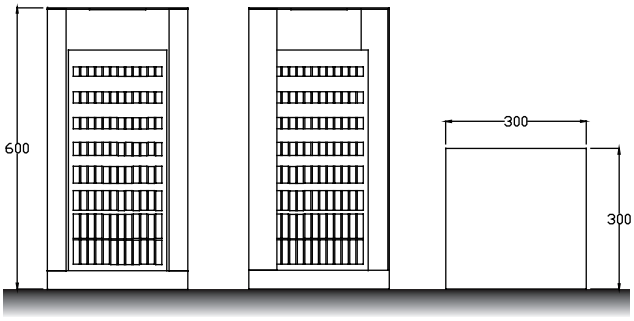

Installation plate

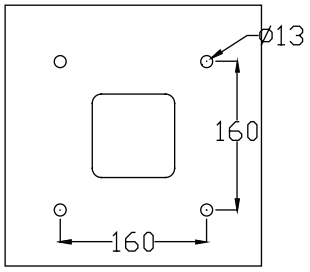

DM–LR15a

Colo(u)r temperature

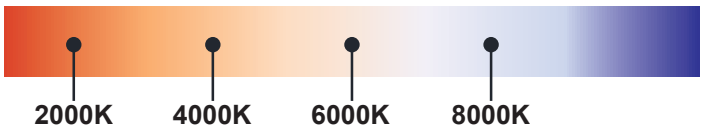

Bollard light

IP65

Rated power	12W	Power Factor	> 0.9
LED Quantity	1pcs	Life	> 50000H
Color Temperature	6000k/4000k/3000k	THD	< 15%
Luminous Flux	1100lm	Frequency Range	50/60HZ
Input Voltage	AC100~277V	Lnstallation Pipe Diameter	/
Protection Grade	IP65	CRI	> 90
Operating Temperature	-30~50℃		

DM-LR15a

Standard colours

9004 9006 9007 9016

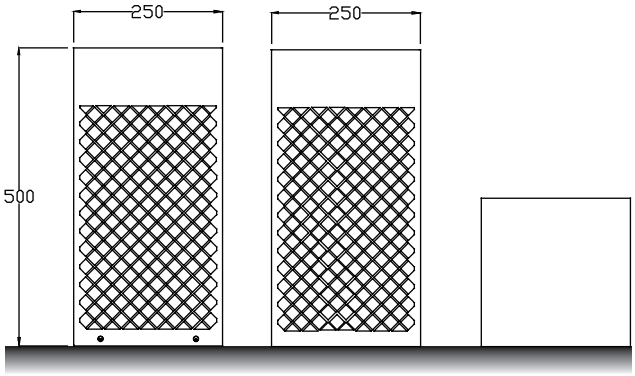

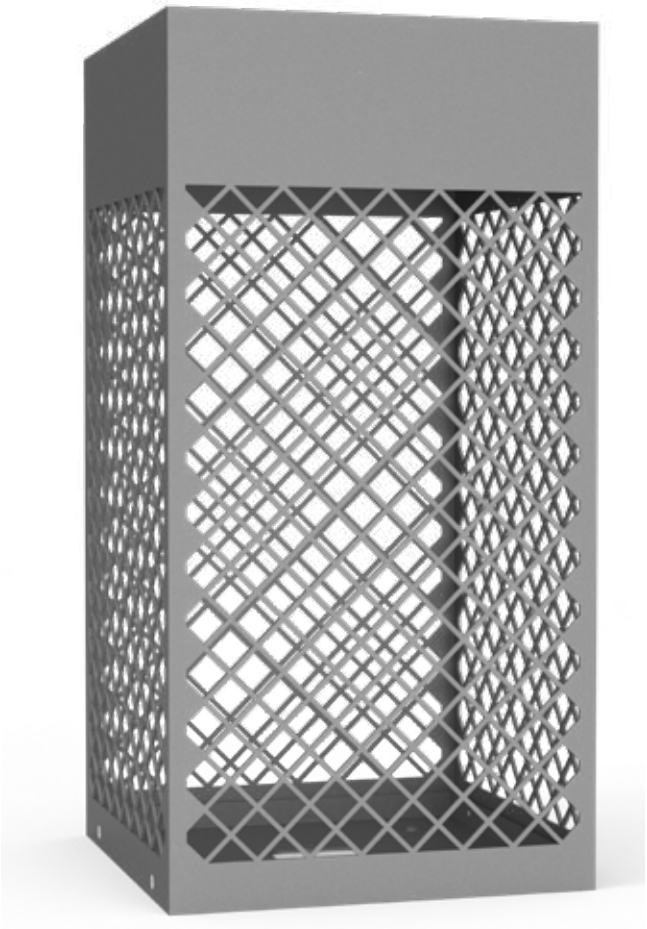

Installation plate

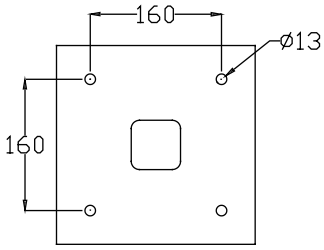

DM–LR16a

Colo(u)r temperature

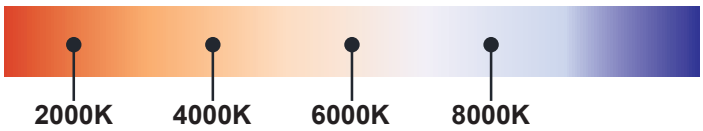

Bollard light

IP65

Rated power	12W	Power Factor	> 0.9
LED Quantity	1pcs	Life	> 50000H
Color Temperature	6000k/4000k/3000k	THD	< 15%
Luminous Flux	1100lm	Frequency Range	50/60HZ
Input Voltage	AC100~277V	Lnstallation Pipe Diameter	/
Protection Grade	IP65	CRI	> 90
Operating Temperature	-30~50℃		

DM-LR16a

Standard colours

9004 9006 9007 9016

Bollard light

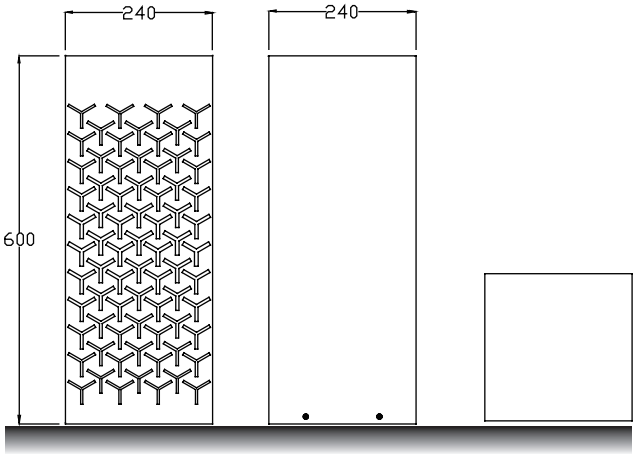

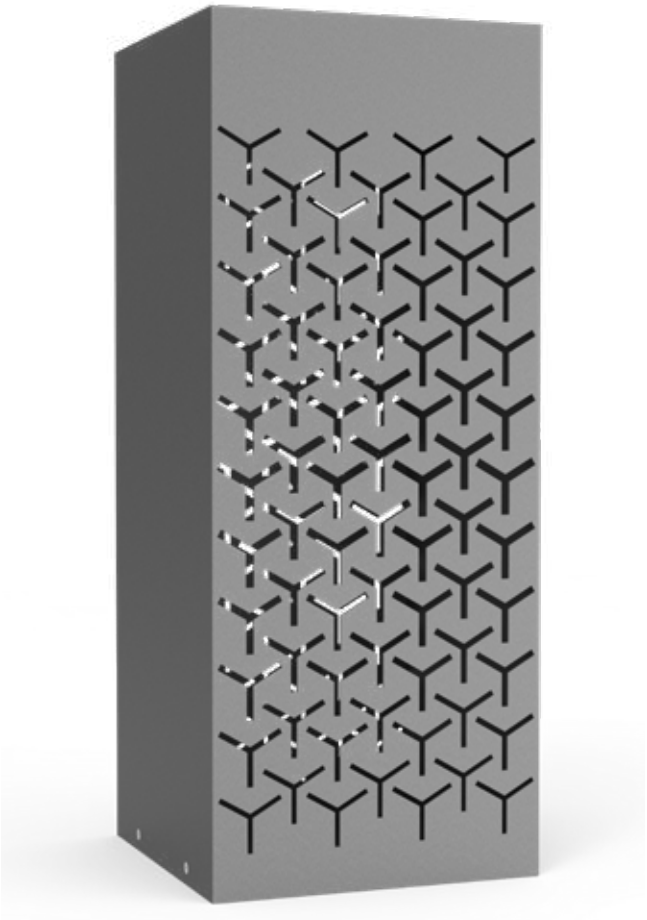

Installation plate

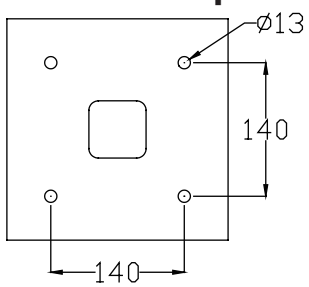

DM–LR17a

Colo(u)r temperature

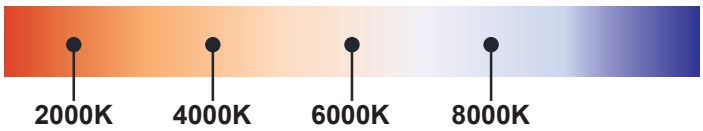

Bollard light

IP65

Rated power	12W	Power Factor	> 0.9
LED Quantity	1pcs	Life	> 50000H
Color Temperature	6000k/4000k/3000k	THD	< 15%
Luminous Flux	1100lm	Frequency Range	50/60HZ
Input Voltage	AC100~277V	Lnstallation Pipe Diameter	/
Protection Grade	IP65	CRI	> 90
Operating Temperature	-30~50℃		

DM-LR17a

Standard colours

9004 9006 9007 9016

Bollard light

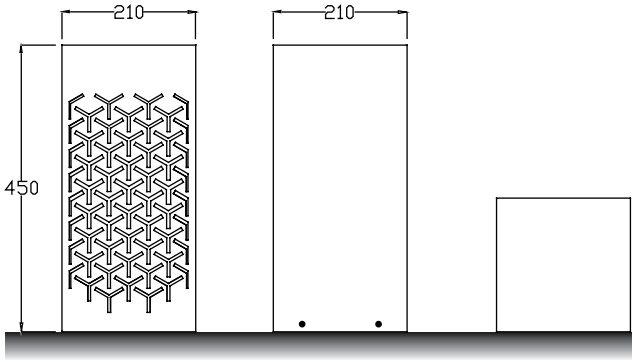

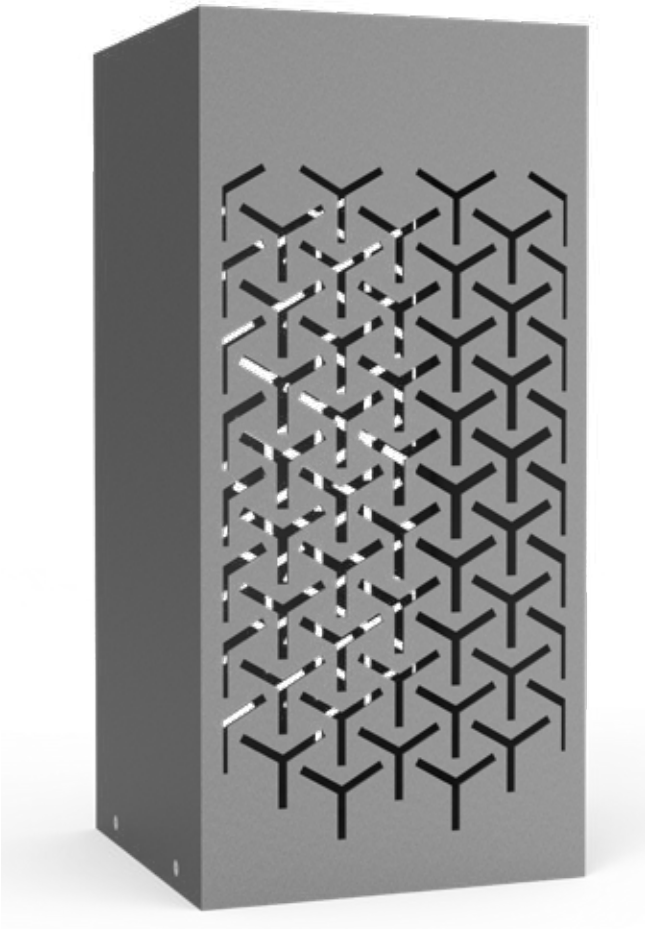

Installation plate

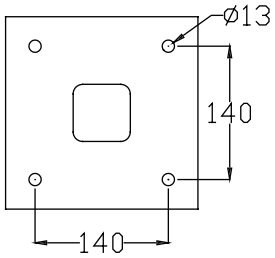

DM–LR18a

Colo(u)r temperature

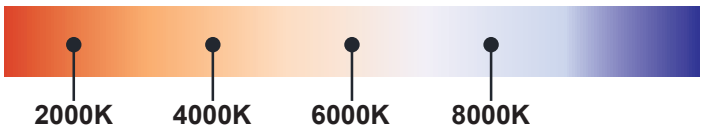

Bollard light

IP65

Rated power	12W	Power Factor	> 0.9
LED Quantity	1pcs	Life	> 50000H
Color Temperature	6000k/4000k/3000k	THD	< 15%
Luminous Flux	1100lm	Frequency Range	50/60HZ
Input Voltage	AC100~277V	Lnstallation Pipe Diameter	/
Protection Grade	IP65	CRI	> 90
Operating Temperature	-30~50℃		

DM-LR18a

Standard colours

9004 9006 9007 9016

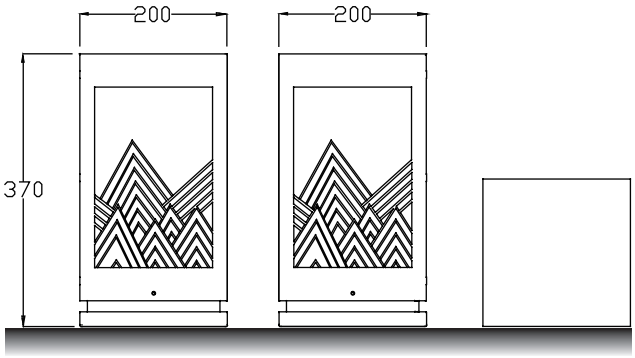

Installation plate

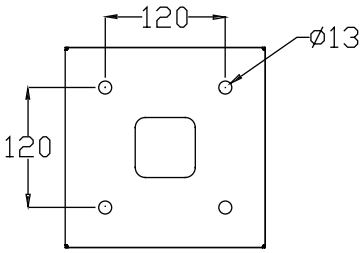

DM–LR19a

Colo(u)r temperature

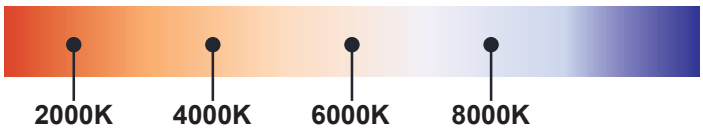

Bollard light

IP65

Rated power	12W	Power Factor	> 0.9
LED Quantity	1pcs	Life	> 50000H
Color Temperature	6000k/4000k/3000k	THD	< 15%
Luminous Flux	1100lm	Frequency Range	50/60HZ
Input Voltage	AC100~277V	Lnstallation Pipe Diameter	/
Protection Grade	IP65	CRI	> 90
Operating Temperature	-30~50℃		

DM-LR19a

Standard colours

9004 9006 9007 9016

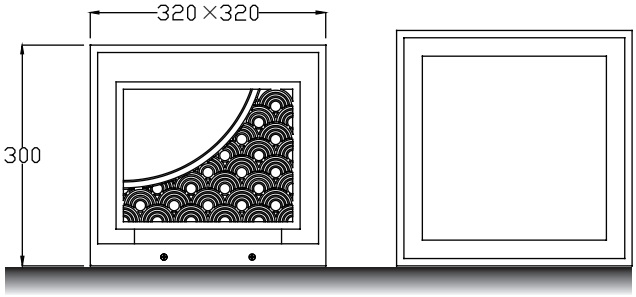

Installation plate

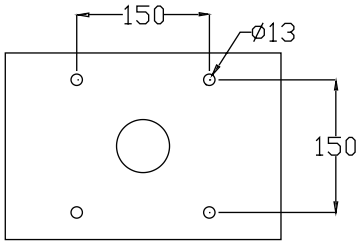

DM–LR20a

Colo(u)r temperature

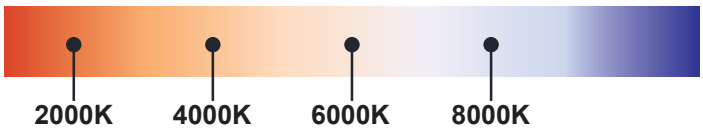

Bollard light

IP65

Rated power	12W	Power Factor	> 0.9
LED Quantity	1pcs	Life	> 50000H
Color Temperature	6000k/4000k/3000k	THD	< 15%
Luminous Flux	1100lm	Frequency Range	50/60HZ
Input Voltage	AC100~277V	Lnstallation Pipe Diameter	/
Protection Grade	IP65	CRI	> 90
Operating Temperature	-30~50℃		

DM-LR20a

Standard colours

9004 9006 9007 9016

Bollard light

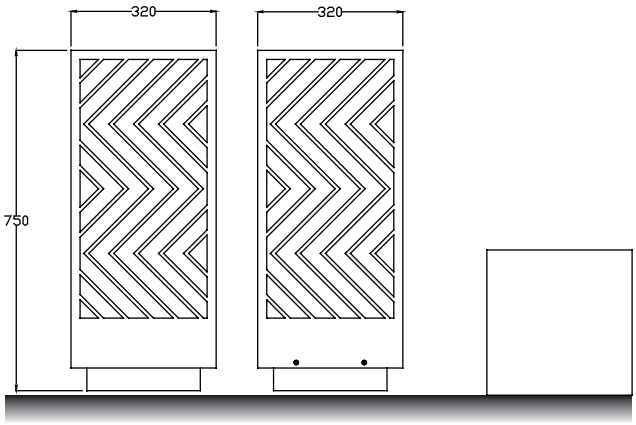

Installation plate

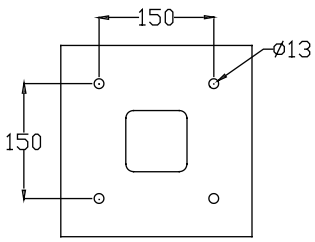

DM–LR21a

Colo(u)r temperature

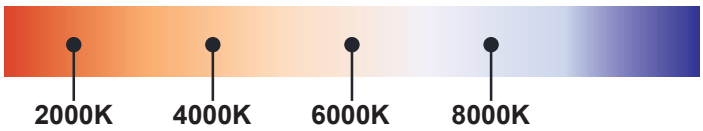

Bollard light

IP65

Rated power	12W	Power Factor	> 0.9
LED Quantity	1pcs	Life	> 50000H
Color Temperature	6000k/4000k/3000k	THD	< 15%
Luminous Flux	1100lm	Frequency Range	50/60HZ
Input Voltage	AC100~277V	Lnstallation Pipe Diameter	/
Protection Grade	IP65	CRI	> 90
Operating Temperature	-30~50℃		

DM-LR21a

Standard colours

9004 9006 9007 9016

Bollard light

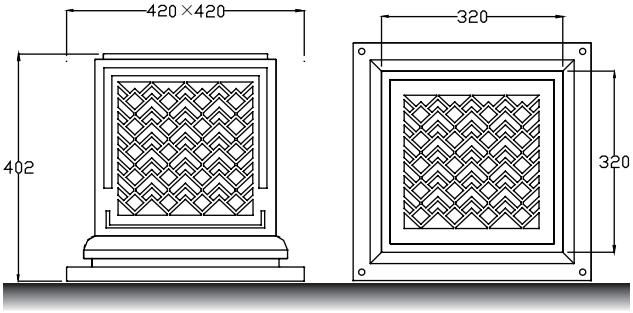

Installation plate

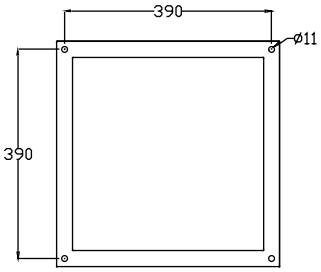

DM–LR22a

Colo(u)r temperature

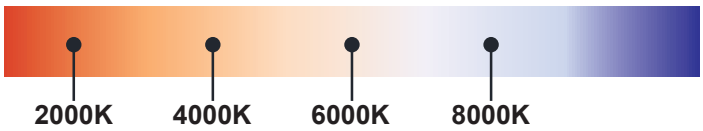

Bollard light

IP65

Rated power	12W	Power Factor	> 0.9
LED Quantity	1pcs	Life	> 50000H
Color Temperature	6000k/4000k/3000k	THD	< 15%
Luminous Flux	1100lm	Frequency Range	50/60HZ
Input Voltage	AC100~277V	Lnstallation Pipe Diameter	/
Protection Grade	IP65	CRI	> 90
Operating Temperature	-30~50℃		

DM-LR22a

Standard colours

9004 9006 9007 9016

Bollard light

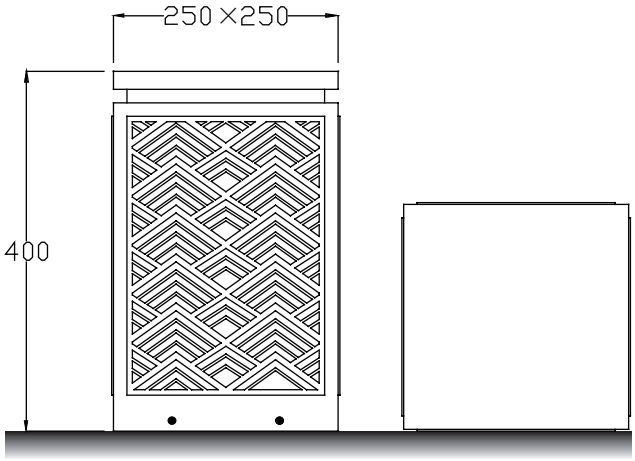

Installation plate

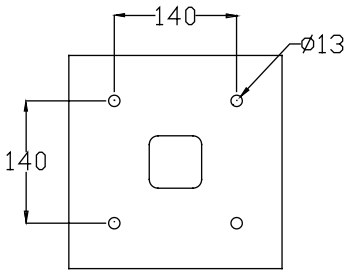

DM-LR23a

Colo(u)r temperature

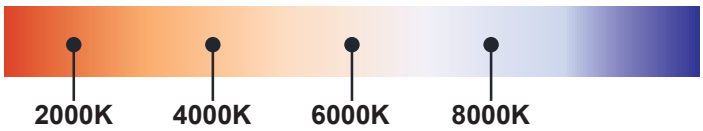

Bollard light

IP65

Rated power	12W	Power Factor	> 0.9
LED Quantity	1pcs	Life	> 50000H
Color Temperature	6000k/4000k/3000k	THD	< 15%
Luminous Flux	1100lm	Frequency Range	50/60HZ
Input Voltage	AC100~277V	Lnstallation Pipe Diameter	/
Protection Grade	IP65	CRI	> 90
Operating Temperature	-30~50℃		

DM-LR23a

Standard colours

9004 9006 9007 9016

Bollard light

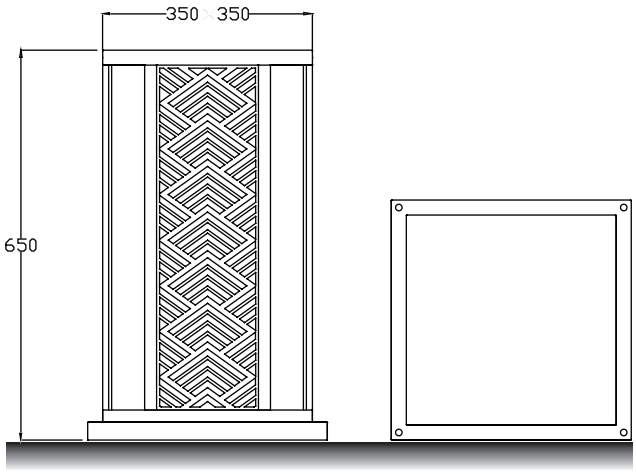

Installation plate

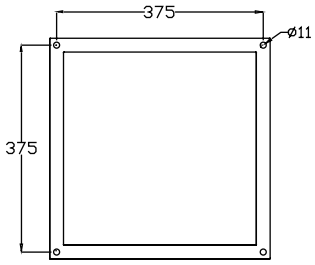

DM–LR24a

Colo(u)r temperature

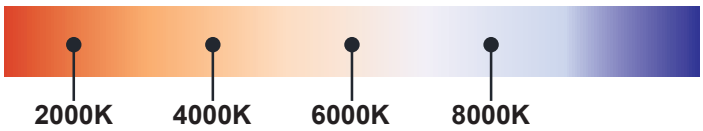

Bollard light

IP65

Rated power	12W	Power Factor	> 0.9
LED Quantity	1pcs	Life	> 50000H
Color Temperature	6000k/4000k/3000k	THD	< 15%
Luminous Flux	1100lm	Frequency Range	50/60HZ
Input Voltage	AC100~277V	Lnstallation Pipe Diameter	/
Protection Grade	IP65	CRI	> 90
Operating Temperature	-30~50℃		

DM-LR24a

Standard colours

9004 9006 9007 9016

Bollard light

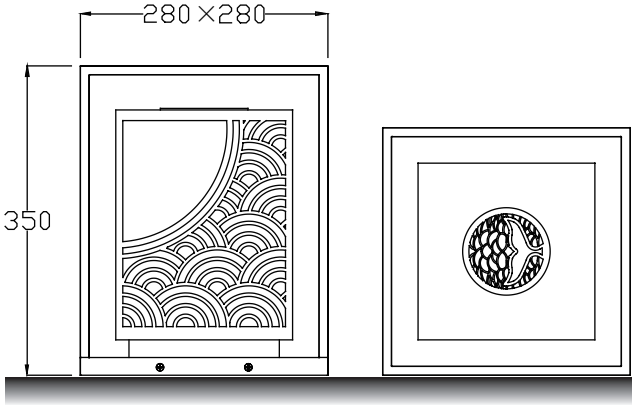

Installation plate

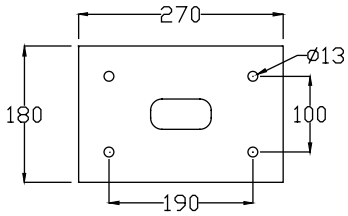

DM-LR125a

Colo(u)r temperature

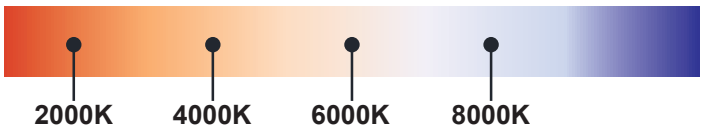

Bollard light

IP65

Rated power	12W	Power Factor	> 0.9
LED Quantity	1pcs	Life	> 50000H
Color Temperature	6000k/4000k/3000k	THD	< 15%
Luminous Flux	1100lm	Frequency Range	50/60HZ
Input Voltage	AC100~277V	Lnstallation Pipe Diameter	/
Protection Grade	IP65	CRI	> 90
Operating Temperature	-30~50℃		

DM-LR25a

Standard colours

9004 9006 9007 9016

Bollard light

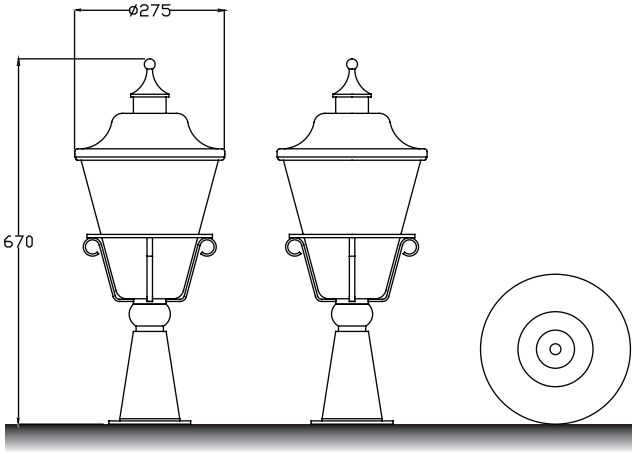

Installation plate

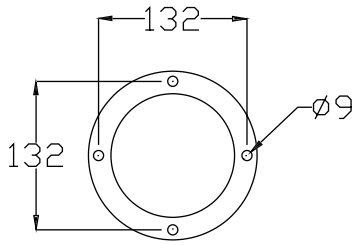

DM-LR26a

Colo(u)r temperature

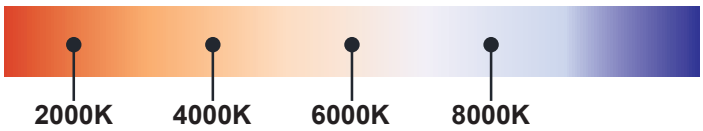

Bollard light

IP65

Rated power	12W	Power Factor	> 0.9
LED Quantity	1pcs	Life	> 50000H
Color Temperature	6000k/4000k/3000k	THD	< 15%
Luminous Flux	1100lm	Frequency Range	50/60HZ
Input Voltage	AC100~277V	Lnstallation Pipe Diameter	/
Protection Grade	IP65	CRI	> 90
Operating Temperature	-30~50℃		

DM-LR26a

Standard colours

9004 9006 9007 9016

Bollard light

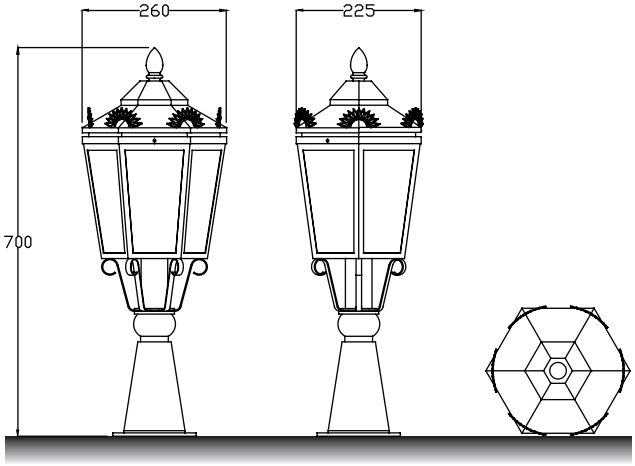

Installation plate

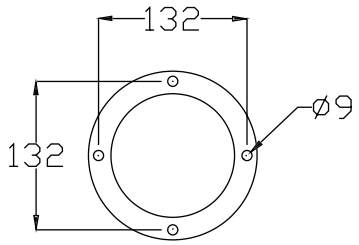

DM-LR27aa

Colo(u)r temperature

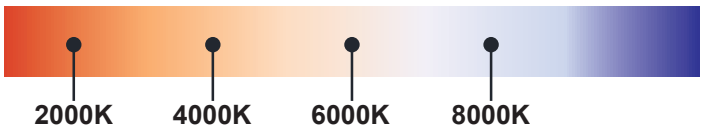

Bollard light

IP65

Rated power	12W	Power Factor	> 0.9
LED Quantity	1pcs	Life	> 50000H
Color Temperature	6000k/4000k/3000k	THD	< 15%
Luminous Flux	1100lm	Frequency Range	50/60HZ
Input Voltage	AC100~277V	Lnstallation Pipe Diameter	/
Protection Grade	IP65	CRI	> 90
Operating Temperature	-30~50℃		

DM-LR27a

Standard colours

9004 9006 9007 9016

Bollard light

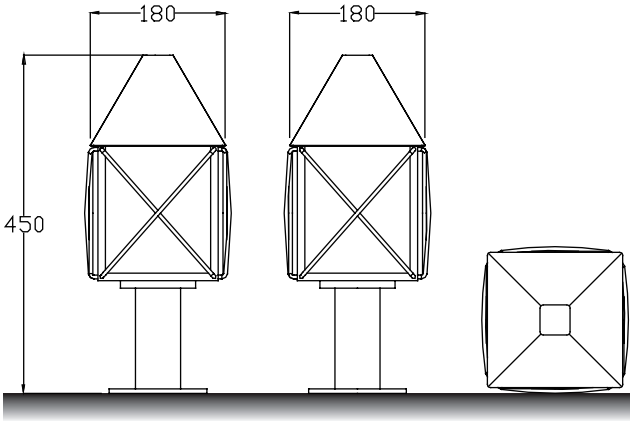

Installation plate

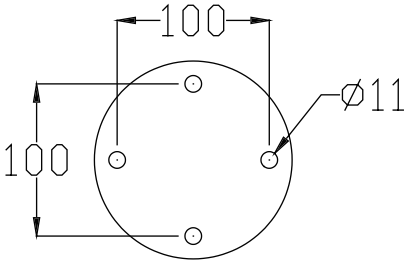

DM-LR28a

Colo(u)r temperature

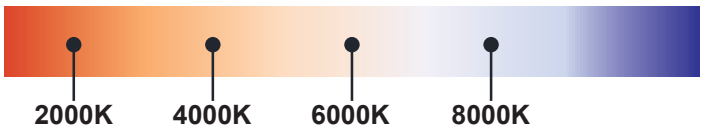

Bollard light

IP65

Rated power	12W	Power Factor	> 0.9
LED Quantity	1pcs	Life	> 50000H
Color Temperature	6000k/4000k/3000k	THD	< 15%
Luminous Flux	1100lm	Frequency Range	50/60HZ
Input Voltage	AC100~277V	Lnstallation Pipe Diameter	/
Protection Grade	IP65	CRI	> 90
Operating Temperature	-30~50℃		

DM-LR28a

Standard colours

9004 9006 9007 9016

Bollard light

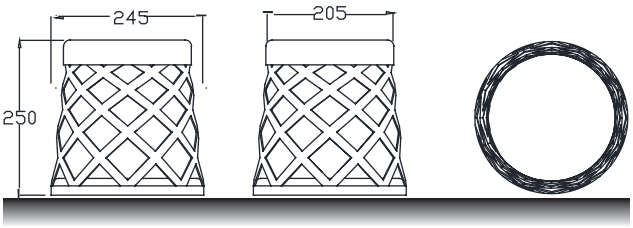

Installation plate

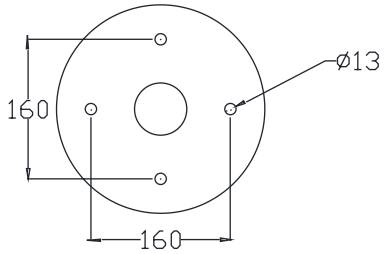

DM–DE1a

Colo(u)r temperature

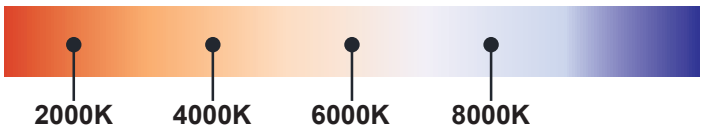

Bollard light

IP65

Rated power	12W	Power Factor	> 0.9
LED Quantity	1pcs	Life	> 50000H
Color Temperature	6000k/4000k/3000k	THD	< 15%
Luminous Flux	1100lm	Frequency Range	50/60HZ
Input Voltage	AC100~277V	Lnstallation Pipe Diameter	/
Protection Grade	IP65	CRI	> 90
Operating Temperature	-30~50℃		

DM-DE1a

Standard colours

9004 9006 9007 9016

Bollard light

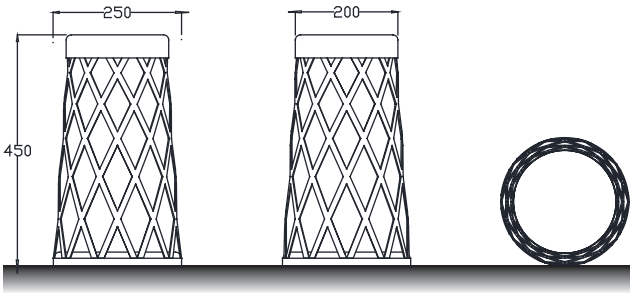

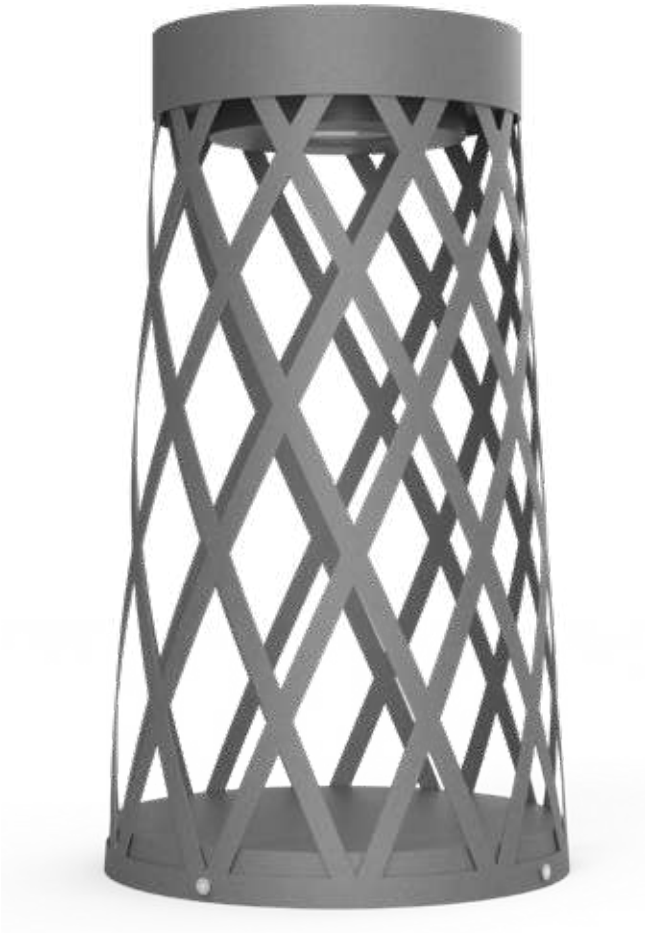

Installation plate

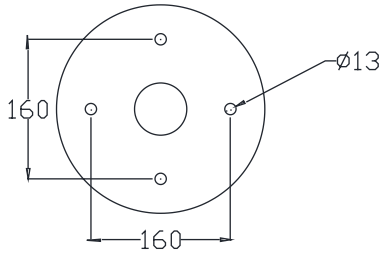

DM-DE2a

Colo(u)r temperature

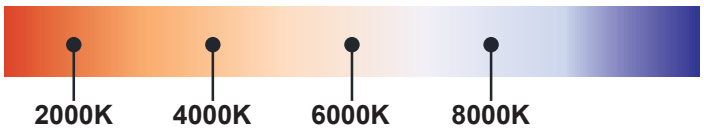

Bollard light

IP65

Rated power	12W	Power Factor	> 0.9
LED Quantity	1pcs	Life	> 50000H
Color Temperature	6000k/4000k/3000k	THD	< 15%
Luminous Flux	1100lm	Frequency Range	50/60HZ
Input Voltage	AC100~277V	Lnstallation Pipe Diameter	/
Protection Grade	IP65	CRI	> 90
Operating Temperature	-30~50℃		

DM-DE2a

Standard colours

9004 9006 9007 9016

Bollard light

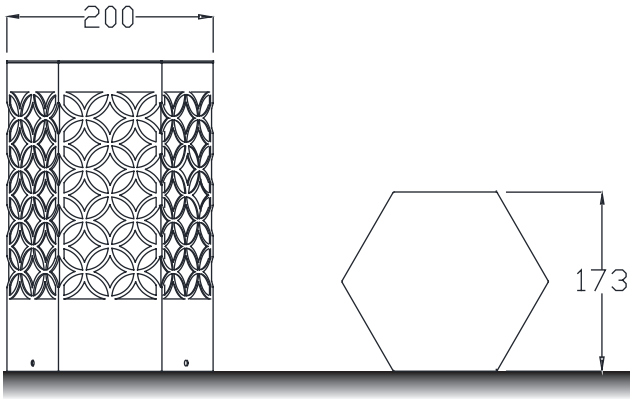

Installation plate

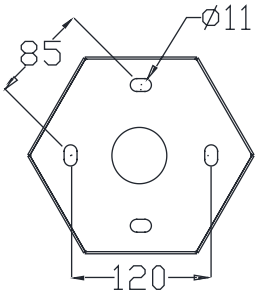

DM-DE3a

Colo(u)r temperature

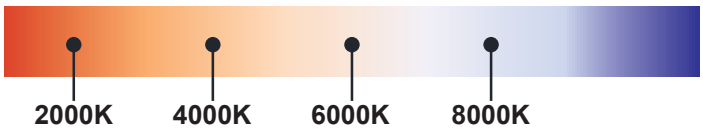

Bollard light

IP65

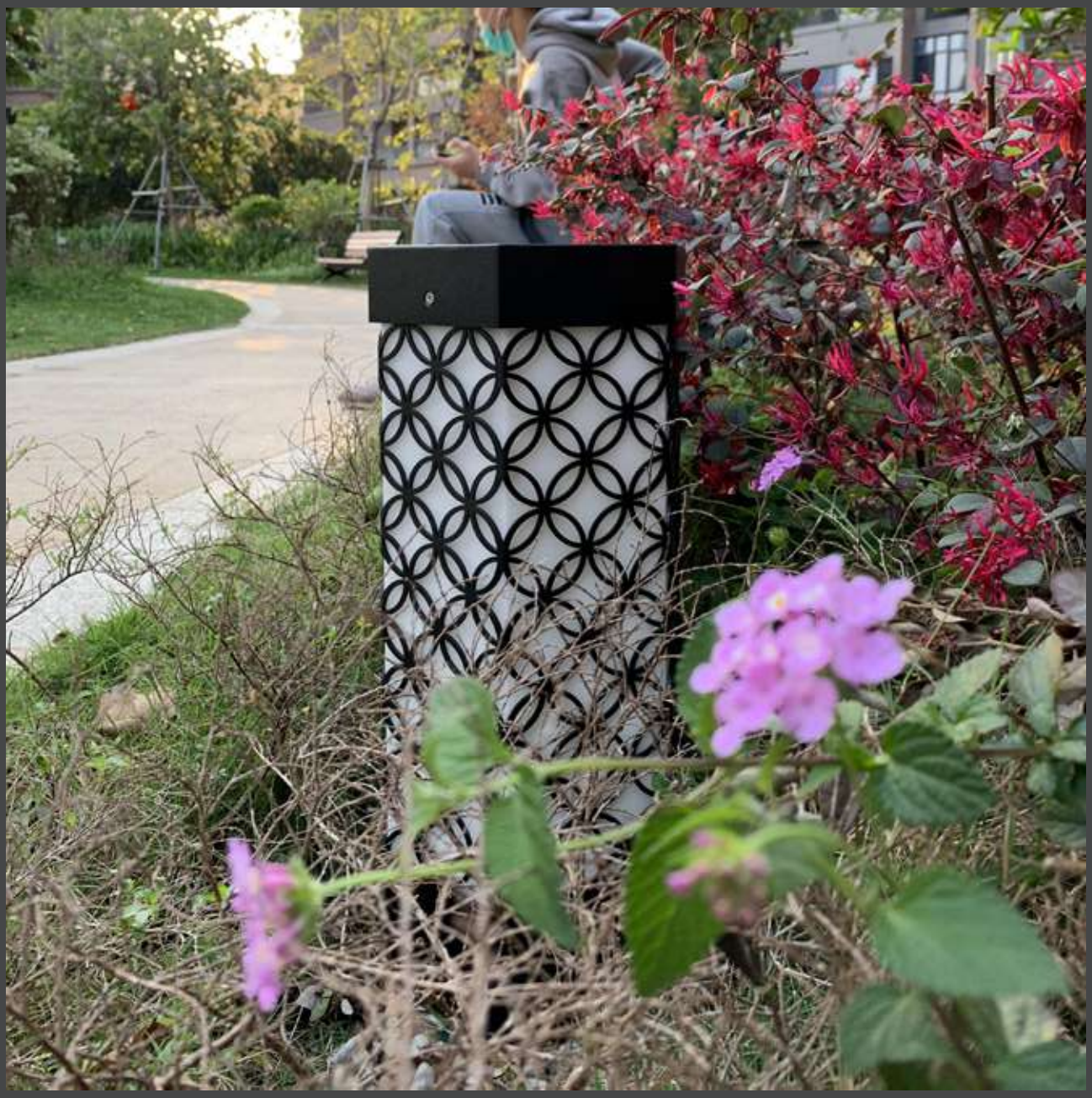

Rated power	12W	Power Factor	> 0.9
LED Quantity	1pcs	Life	> 50000H
Color Temperature	6000k/4000k/3000k	THD	< 15%
Luminous Flux	1100lm	Frequency Range	50/60HZ
Input Voltage	AC100~277V	Lnstallation Pipe Diameter	/
Protection Grade	IP65	CRI	> 90
Operating Temperature	-30~50℃		

DM-DE3a

Standard colours

9004 9006 9007 9016

Bollard light

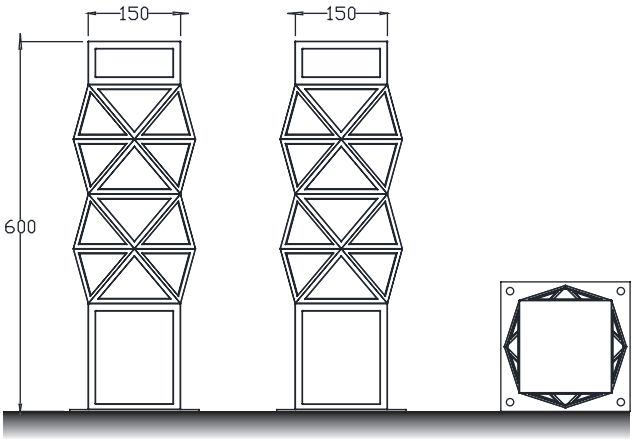

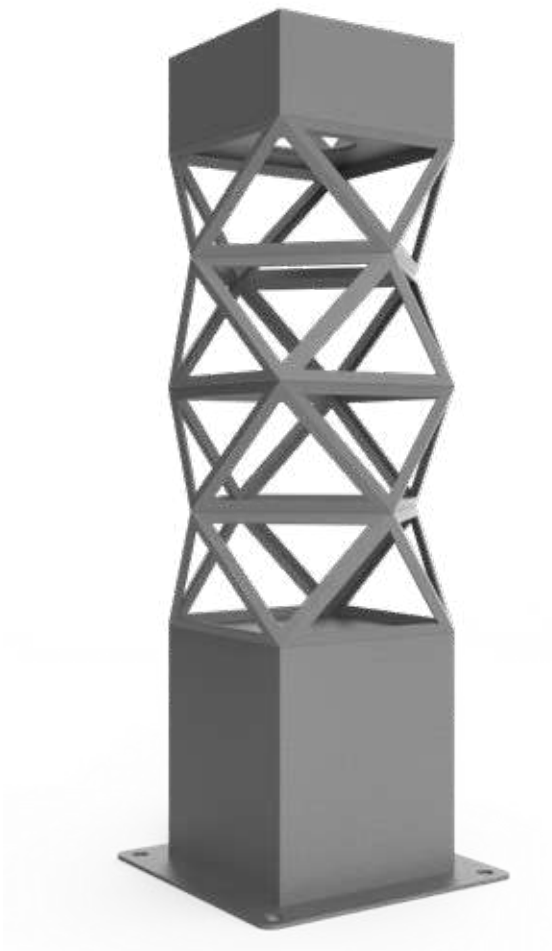

Installation plate

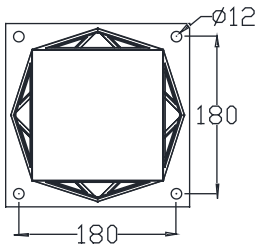

DM-DE4a

Colo(u)r temperature

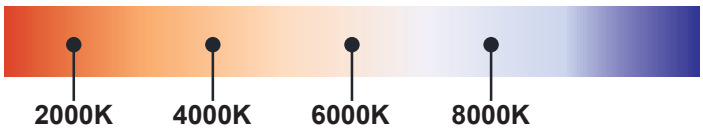

Bollard light

IP65

Rated power	12W	Power Factor	> 0.9
LED Quantity	1pcs	Life	> 50000H
Color Temperature	6000k/4000k/3000k	THD	< 15%
Luminous Flux	1100lm	Frequency Range	50/60HZ
Input Voltage	AC100~277V	Lnstallation Pipe Diameter	/
Protection Grade	IP65	CRI	> 90
Operating Temperature	-30~50℃		

DM-DE4a

Standard colours

9004 9006 9007 9016

Bollard light

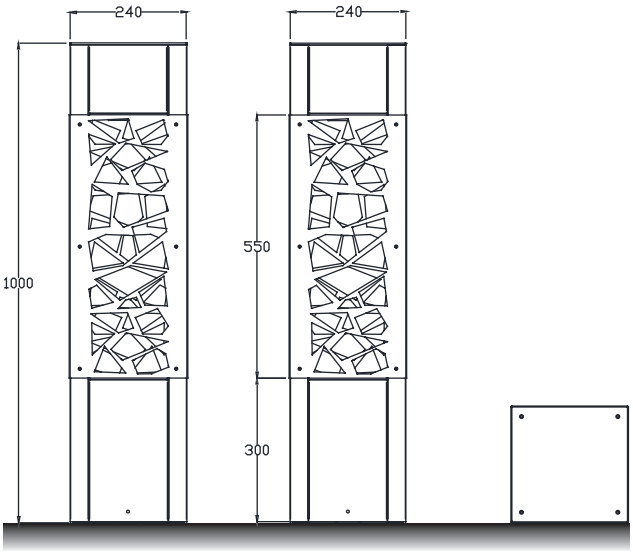

Installation plate

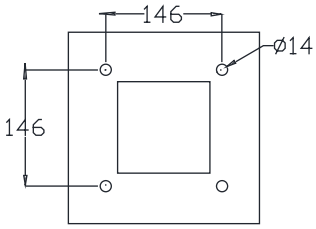

DM-DE5a

Colo(u)r temperature

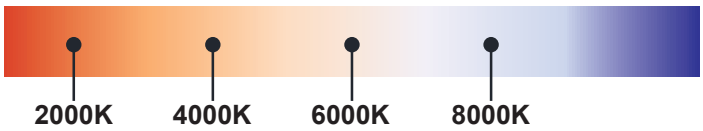

Bollard light

IP65

Rated power	12W	Power Factor	> 0.9
LED Quantity	1pcs	Life	> 50000H
Color Temperature	6000k/4000k/3000k	THD	< 15%
Luminous Flux	1100lm	Frequency Range	50/60HZ
Input Voltage	AC100~277V	Lnstallation Pipe Diameter	/
Protection Grade	IP65	CRI	> 90
Operating Temperature	-30~50℃		

DM-DE5a

Standard colours

9004 9006 9007 9016

Bollard light

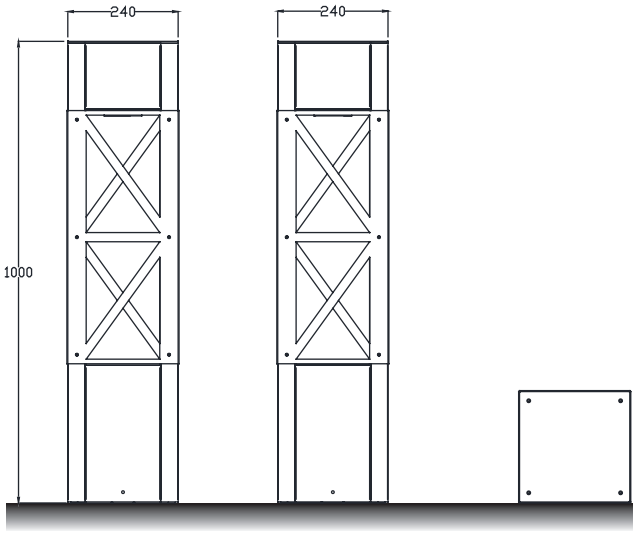

Installation plate

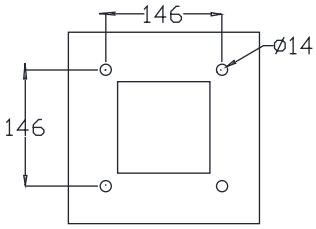

DM-DE6a

Colo(u)r temperature

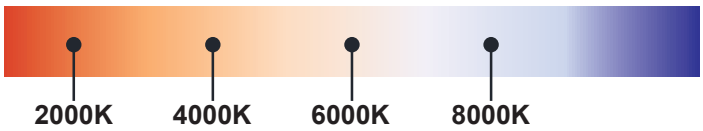

Bollard light

IP65

Rated power	12W	Power Factor	> 0.9
LED Quantity	1pcs	Life	> 50000H
Color Temperature	6000k/4000k/3000k	THD	< 15%
Luminous Flux	1100lm	Frequency Range	50/60HZ
Input Voltage	AC100~277V	Lnstallation Pipe Diameter	/
Protection Grade	IP65	CRI	> 90
Operating Temperature	-30~50℃		

DM-DE6a

Standard colours

9004 9006 9007 9016

Bollard light

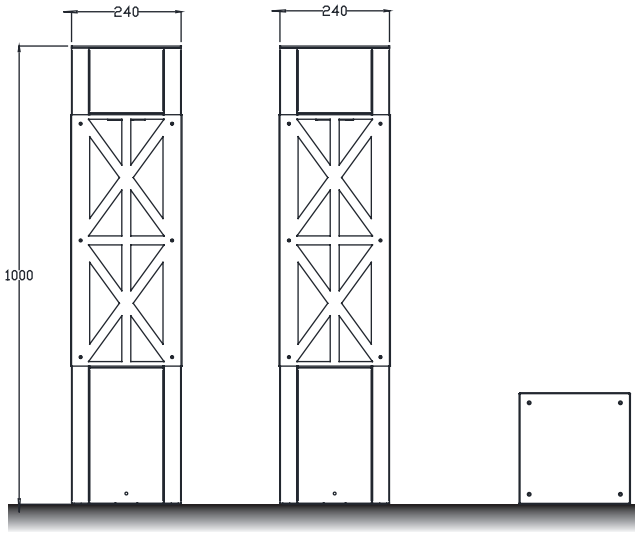

Installation plate

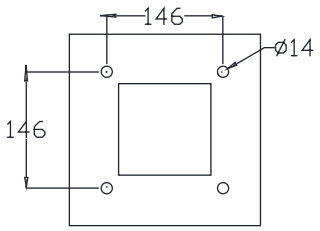

DM-DE7a

Colo(u)r temperature

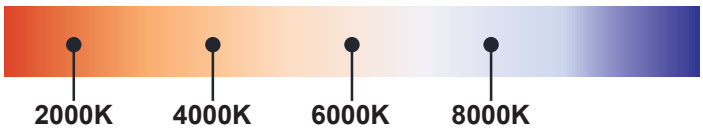

Bollard light

IP65

Rated power	12W	Power Factor	> 0.9
LED Quantity	1pcs	Life	> 50000H
Color Temperature	6000k/4000k/3000k	THD	< 15%
Luminous Flux	1100lm	Frequency Range	50/60HZ
Input Voltage	AC100~277V	Lnstallation Pipe Diameter	/
Protection Grade	IP65	CRI	> 90
Operating Temperature	-30~50℃		

DM-DE7a

Standard colours

9004 9006 9007 9016

Bollard light

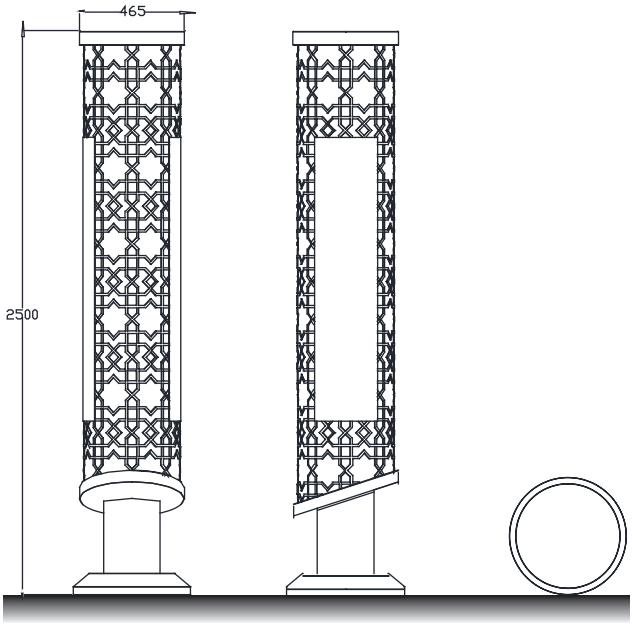

Installation plate

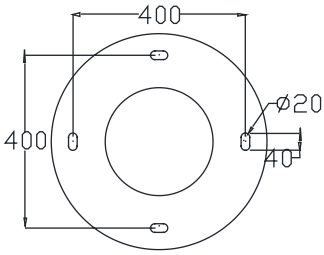

DM-DE8a

Colo(u)r temperature

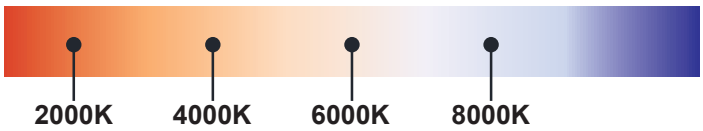

Bollard light

IP65

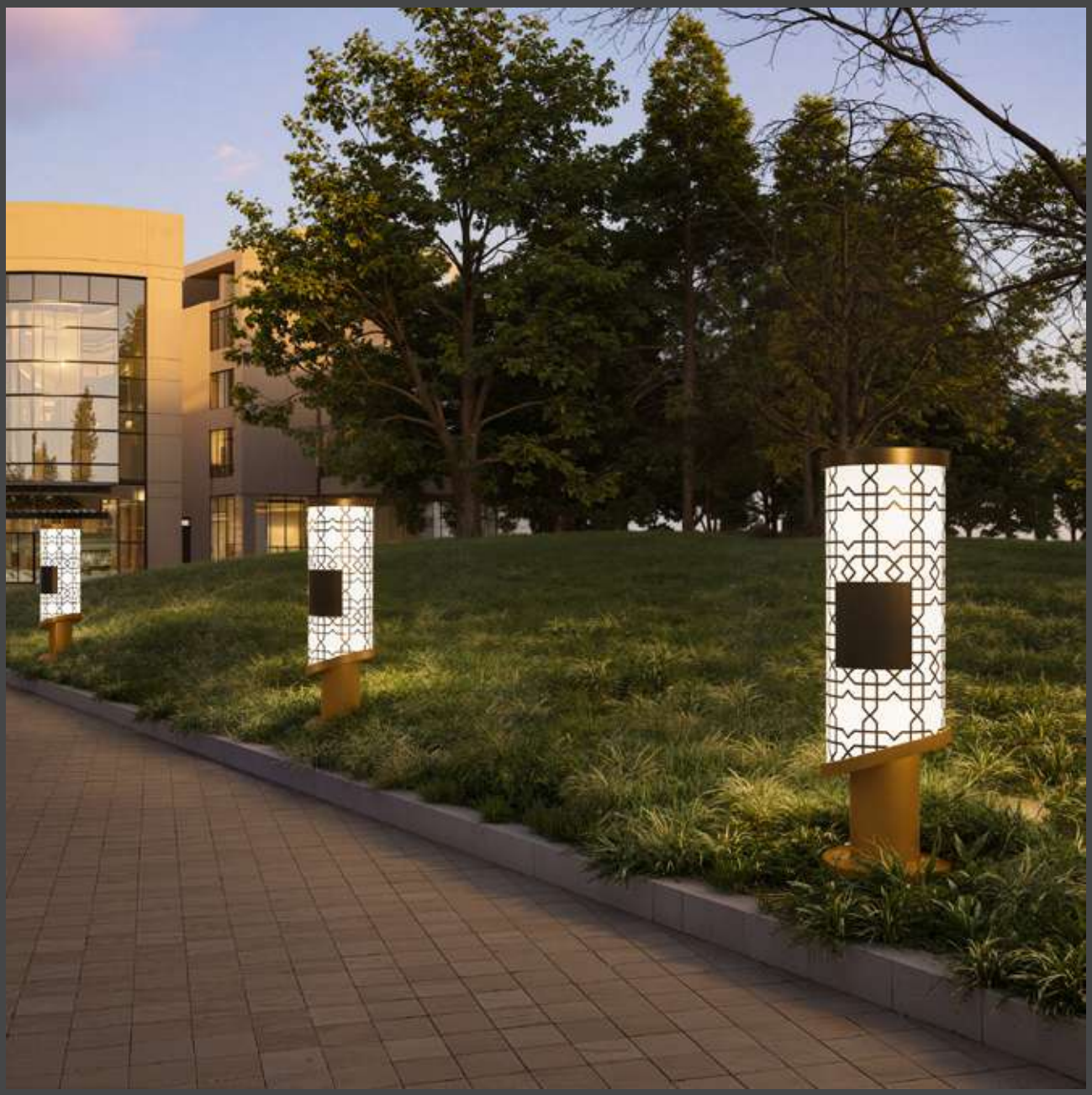

Rated power	12W	Power Factor	> 0.9
LED Quantity	1pcs	Life	> 50000H
Color Temperature	6000k/4000k/3000k	THD	< 15%
Luminous Flux	1100lm	Frequency Range	50/60HZ
Input Voltage	AC100~277V	Lnstallation Pipe Diameter	/
Protection Grade	IP65	CRI	> 90
Operating Temperature	-30~50℃		

DM-DE8a

Standard colours

9004 9006 9007 9016

Bollard light

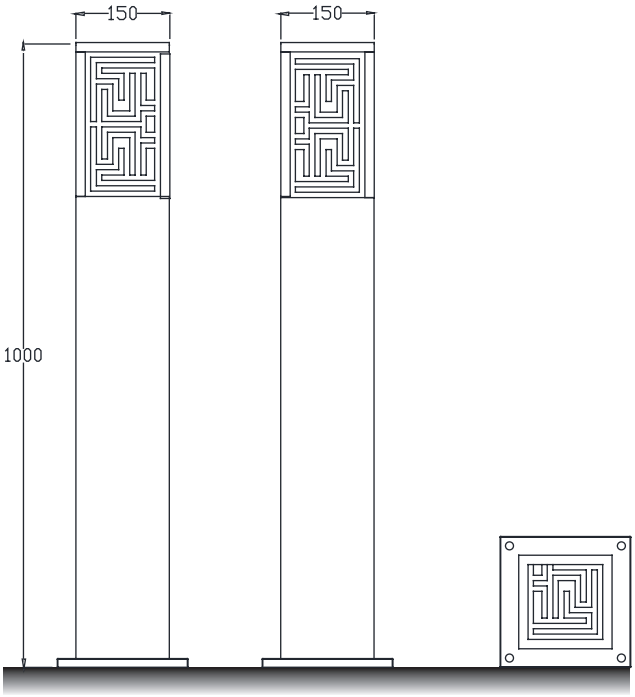

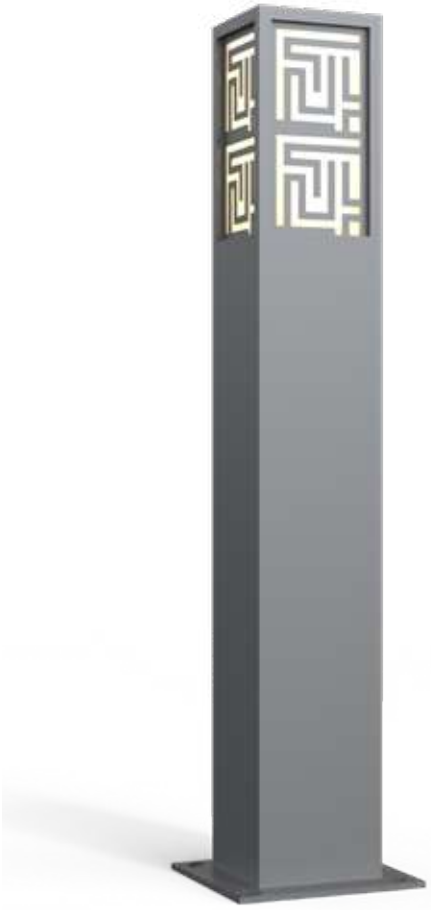

Installation plate

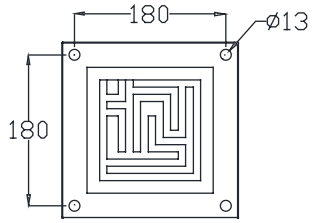

DM–DE9a

Colo(u)r temperature

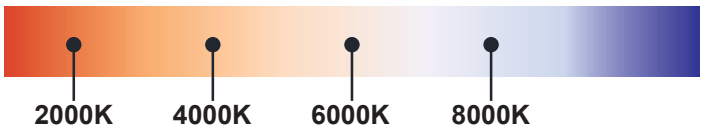

Bollard light

IP65

Rated power	12W	Power Factor	> 0.9
LED Quantity	1pcs	Life	> 50000H
Color Temperature	6000k/4000k/3000k	THD	< 15%
Luminous Flux	1100lm	Frequency Range	50/60HZ
Input Voltage	AC100~277V	Lnstallation Pipe Diameter	/
Protection Grade	IP65	CRI	> 90
Operating Temperature	-30~50℃		

DM-DE9a

Standard colours

9004 9006 9007 9016

Bollard light

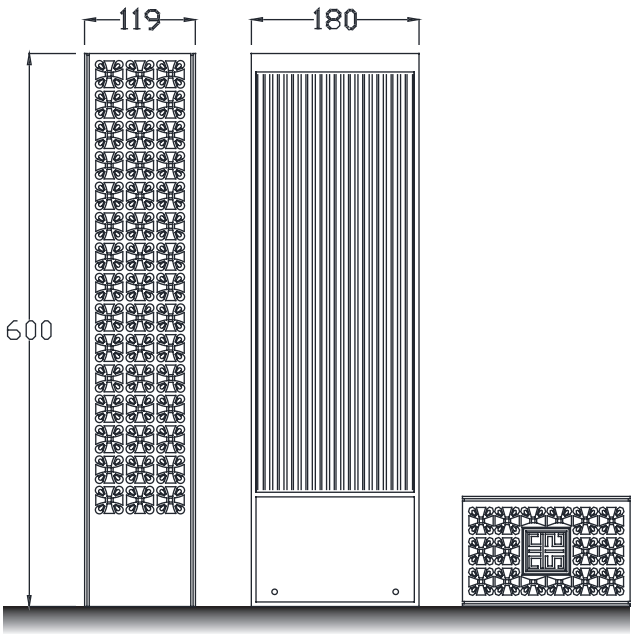

Installation plate

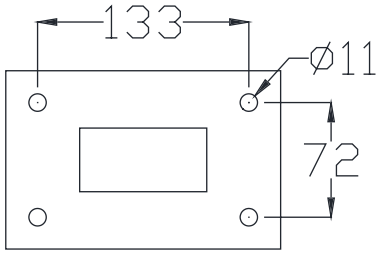

DM-DE10a

Colo(u)r temperature

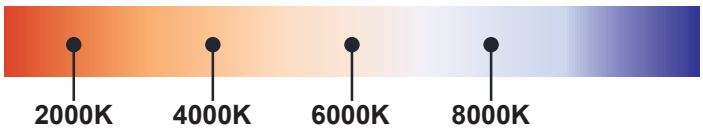

Bollard light

IP65

Rated power	12W	Power Factor	> 0.9
LED Quantity	1pcs	Life	> 50000H
Color Temperature	6000k/4000k/3000k	THD	< 15%
Luminous Flux	1100lm	Frequency Range	50/60HZ
Input Voltage	AC100~277V	Lnstallation Pipe Diameter	/
Protection Grade	IP65	CRI	> 90
Operating Temperature	-30~50℃		

DM-DE10a

Standard colours

9004 9006 9007 9016

Bollard light

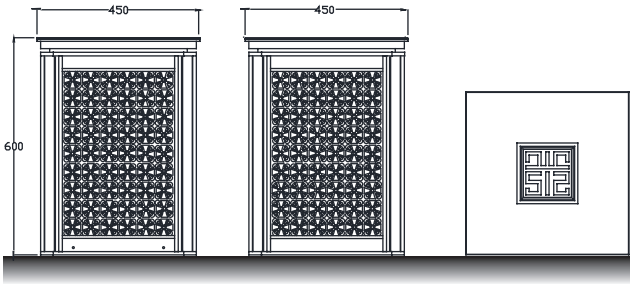

Installation plate

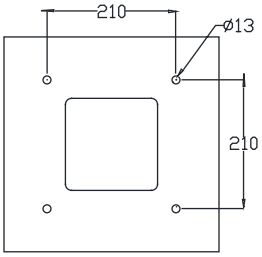

DM-DE11a

Colo(u)r temperature

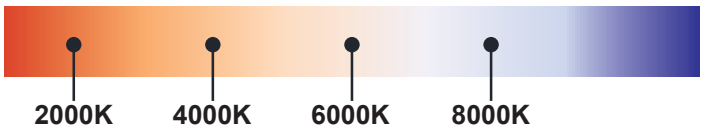

Bollard light

IP65

Rated power	12W	Power Factor	> 0.9
LED Quantity	1pcs	Life	> 50000H
Color Temperature	6000k/4000k/3000k	THD	< 15%
Luminous Flux	1100lm	Frequency Range	50/60HZ
Input Voltage	AC100~277V	Lnstallation Pipe Diameter	/
Protection Grade	IP65	CRI	> 90
Operating Temperature	-30~50℃		

DM-DE10a

Standard colours

9004 9006 9007 9016

Bollard light

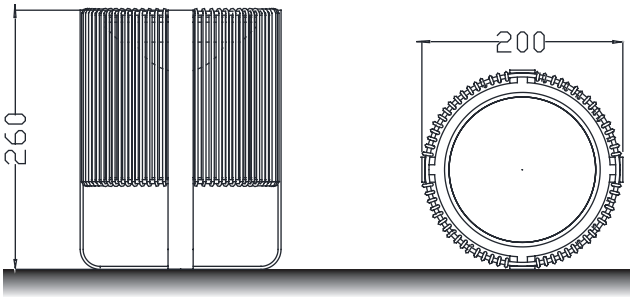

Installation plate

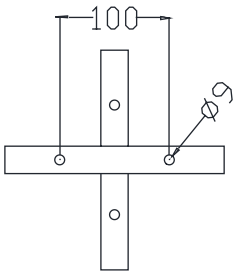

DM-DE12a

Colo(u)r temperature

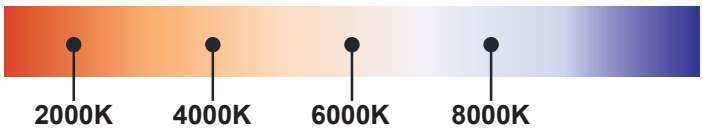

Bollard light

IP65

Rated power	12W	Power Factor	> 0.9
LED Quantity	1pcs	Life	> 50000H
Color Temperature	6000k/4000k/3000k	THD	< 15%
Luminous Flux	1100lm	Frequency Range	50/60HZ
Input Voltage	AC100~277V	Lnstallation Pipe Diameter	/
Protection Grade	IP65	CRI	> 90
Operating Temperature	-30~50℃		

DM-DE12a

Standard colours

9004 9006 9007 9016

Bollard light

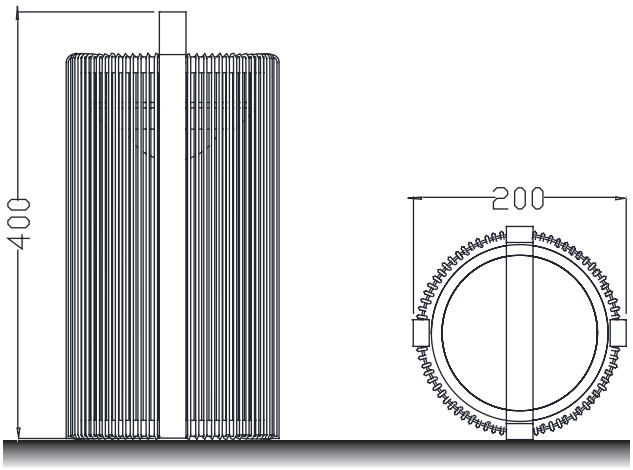

Installation plate

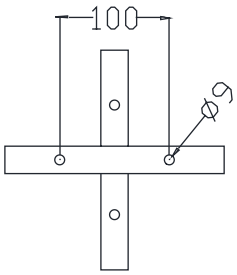

DM-DE13a

Colo(u)r temperature

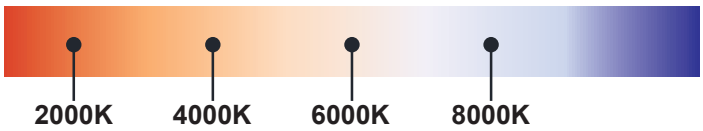

Bollard light

IP65

Rated power	12W	Power Factor	> 0.9
LED Quantity	1pcs	Life	> 50000H
Color Temperature	6000k/4000k/3000k	THD	< 15%
Luminous Flux	1100lm	Frequency Range	50/60HZ
Input Voltage	AC100~277V	Lnstallation Pipe Diameter	/
Protection Grade	IP65	CRI	> 90
Operating Temperature	-30~50℃		

DM-DE13a

Standard colours

9004 9006 9007 9016

Bollard light

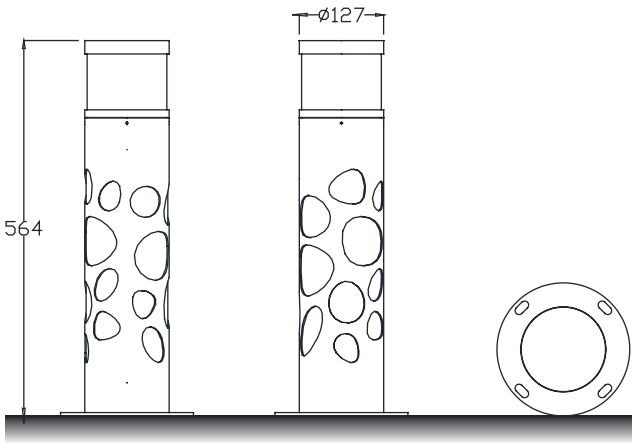

Installation plate

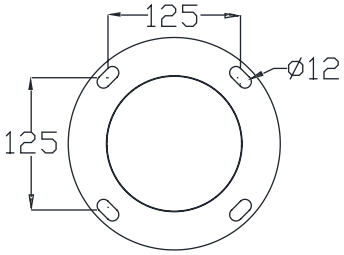

DM-DE14a

Colo(u)r temperature

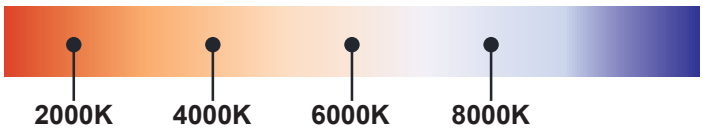

E27

Bollard light

IP65

Rated power	12W	Power Factor	> 0.9
LED Quantity	1pcs	Life	> 50000H
Color Temperature	6000k/4000k/3000k	THD	< 15%
Luminous Flux	1100lm	Frequency Range	50/60HZ
Input Voltage	AC100~277V	Lnstallation Pipe Diameter	/
Protection Grade	IP65	CRI	> 90
Operating Temperature	-30~50℃		

DM-DE14a

Standard colours

9004 9006 9007 9016

Bollard light

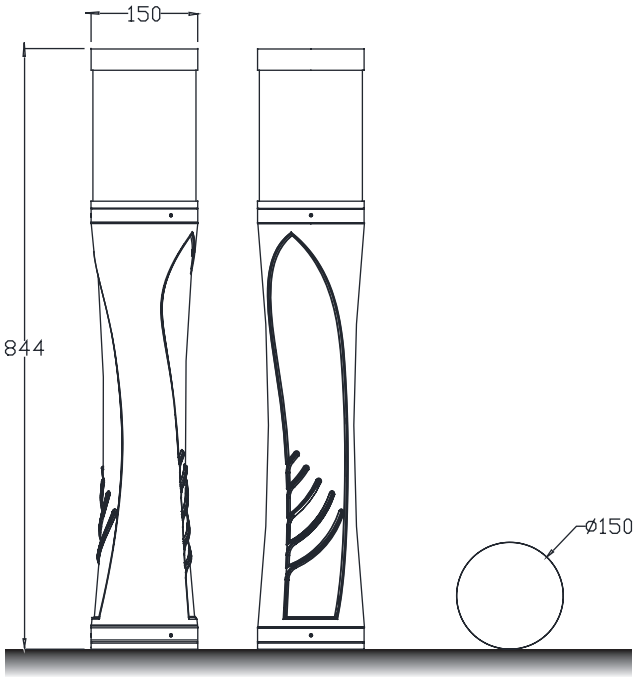

Installation plate

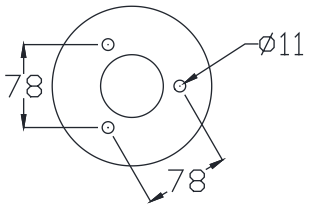

DM-DE15a

Colo(u)r temperature

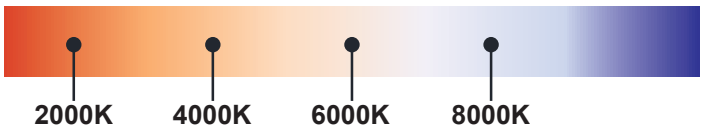

Bollard light

IP65

Rated power	12W	Power Factor	> 0.9
LED Quantity	1pcs	Life	> 50000H
Color Temperature	6000k/4000k/3000k	THD	< 15%
Luminous Flux	1100lm	Frequency Range	50/60HZ
Input Voltage	AC100~277V	Lnstallation Pipe Diameter	/
Protection Grade	IP65	CRI	> 90
Operating Temperature	-30~50℃		

DM-DE15a

Standard colours

9004 9006 9007 9016

Bollard light

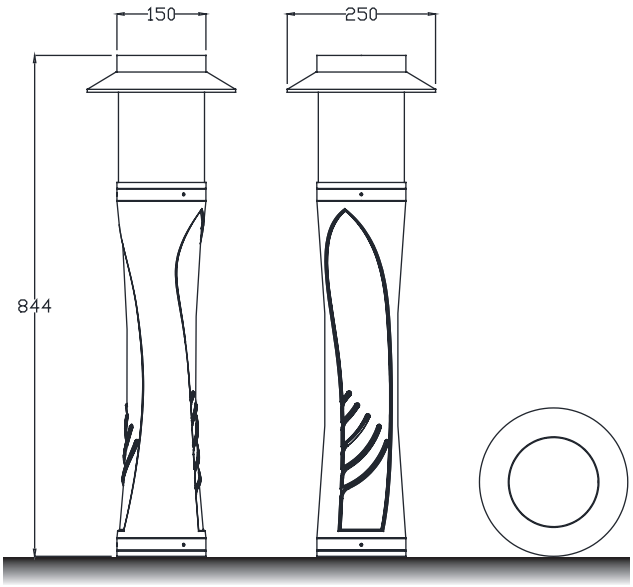

Installation plate

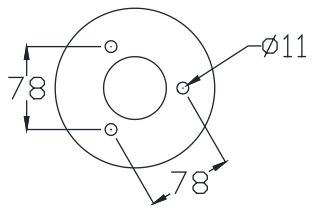

DM-DE16a

Colo(u)r temperature

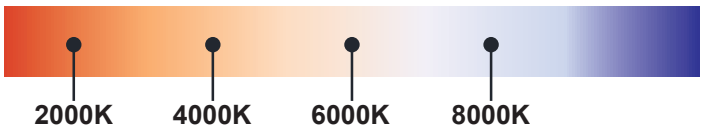

Bollard light

IP65

Rated power	12W	Power Factor	> 0.9
LED Quantity	1pcs	Life	> 50000H
Color Temperature	6000k/4000k/3000k	THD	< 15%
Luminous Flux	1100lm	Frequency Range	50/60HZ
Input Voltage	AC100~277V	Lnstallation Pipe Diameter	/
Protection Grade	IP65	CRI	> 90
Operating Temperature	-30~50℃		

DM-DE16a

Standard colours

9004 9006 9007 9016

Bollard light

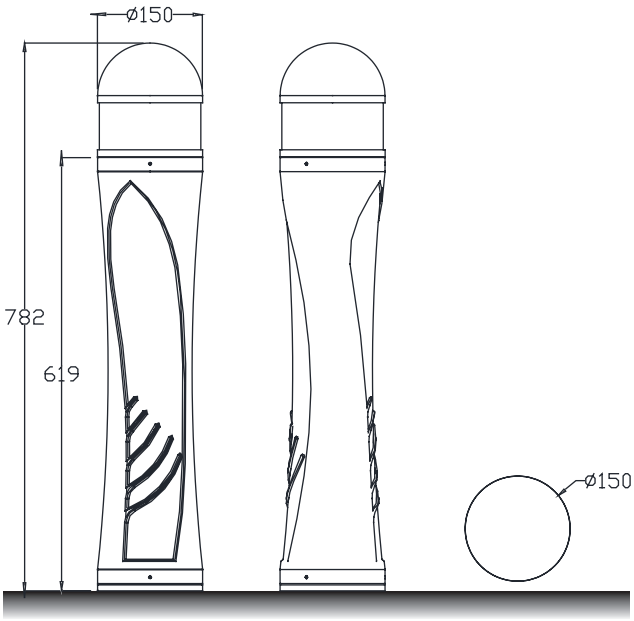

Installation plate

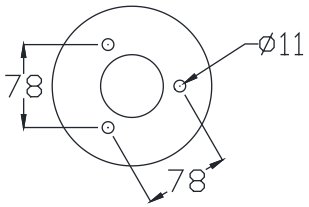

DM-DE17a

Colo(u)r temperature

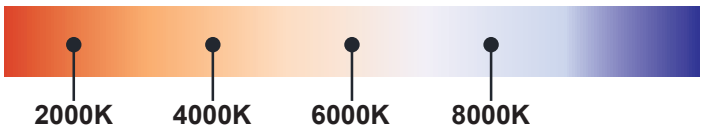

Bollard light

IP65

Rated power	12W	Power Factor	> 0.9
LED Quantity	1pcs	Life	> 50000H
Color Temperature	6000k/4000k/3000k	THD	< 15%
Luminous Flux	1100lm	Frequency Range	50/60HZ
Input Voltage	AC100~277V	Lnstallation Pipe Diameter	/
Protection Grade	IP65	CRI	> 90
Operating Temperature	-30~50℃		

DM-DE17a

Standard colours

9004 9006 9007 9016

Bollard light

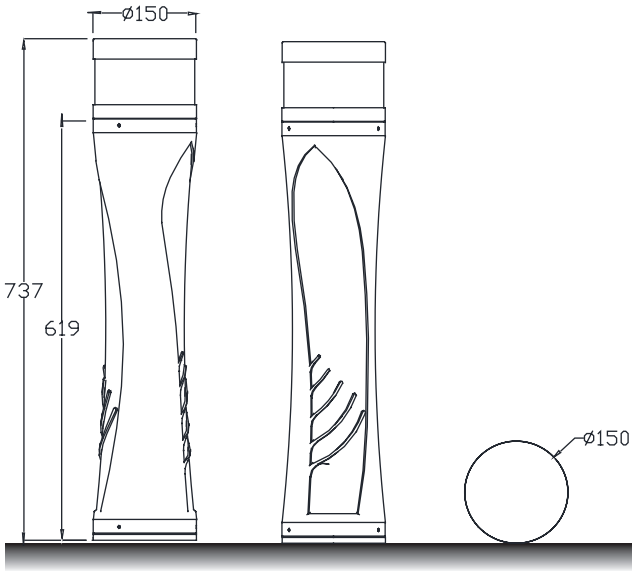

Installation plate

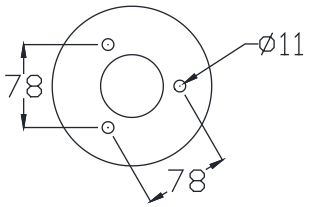

DM-DE18a

Colo(u)r temperature

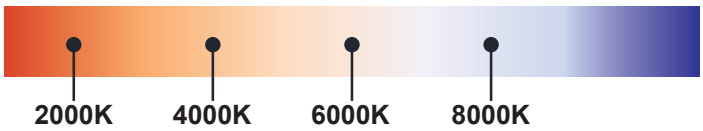

Bollard light

IP65

Rated power	12W	Power Factor	> 0.9
LED Quantity	1pcs	Life	> 50000H
Color Temperature	6000k/4000k/3000k	THD	< 15%
Luminous Flux	1100lm	Frequency Range	50/60HZ
Input Voltage	AC100~277V	Lnstallation Pipe Diameter	/
Protection Grade	IP65	CRI	> 90
Operating Temperature	-30~50℃		

DM-DE18a

Standard colours

9004 9006 9007 9016

Bollard light

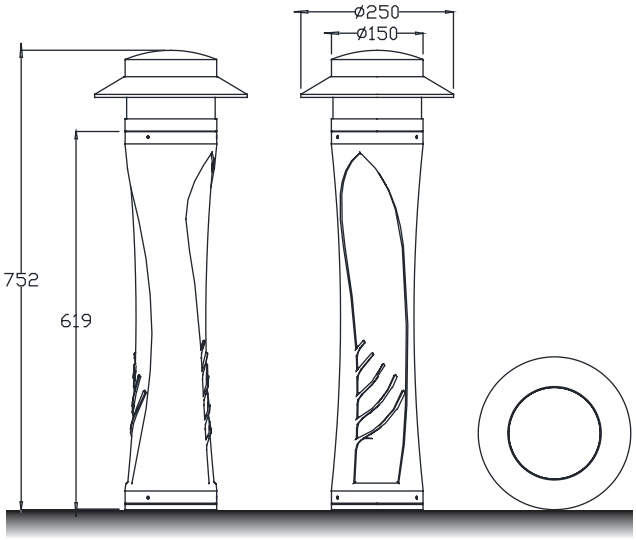

Installation plate

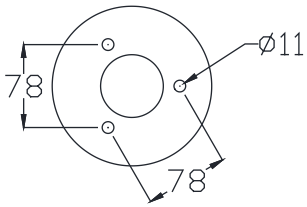

DM-DE19a

Colo(u)r temperature

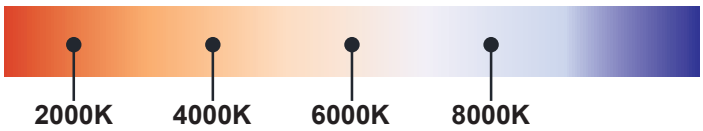

Bollard light

IP65

Rated power	12W	Power Factor	> 0.9
LED Quantity	1pcs	Life	> 50000H
Color Temperature	6000k/4000k/3000k	THD	< 15%
Luminous Flux	1100lm	Frequency Range	50/60HZ
Input Voltage	AC100~277V	Lnstallation Pipe Diameter	/
Protection Grade	IP65	CRI	> 90
Operating Temperature	-30~50℃		

DM-DE19a

Standard colours

9004 9006 9007 9016

Bollard light

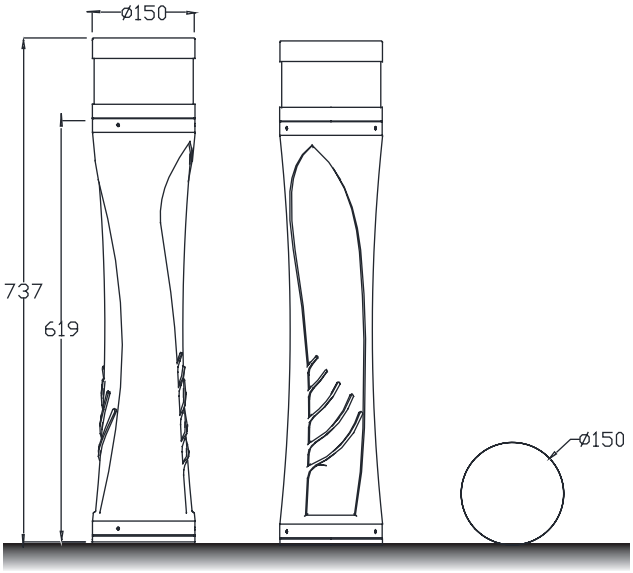

Installation plate

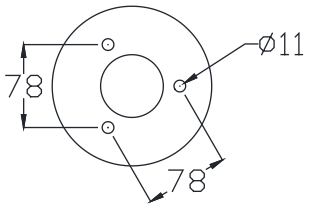

DM-DE20a

Colo(u)r temperature

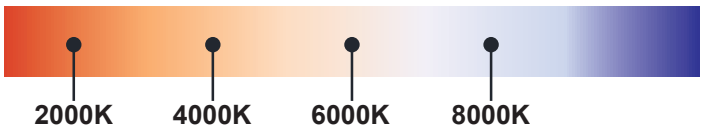

Bollard light

IP65

Rated power	12W	Power Factor	> 0.9
LED Quantity	1pcs	Life	> 50000H
Color Temperature	6000k/4000k/3000k	THD	< 15%
Luminous Flux	1100lm	Frequency Range	50/60HZ
Input Voltage	AC100~277V	Lnstallation Pipe Diameter	/
Protection Grade	IP65	CRI	> 90
Operating Temperature	-30~50℃		

DM-DE20a

Standard colours

9004 9006 9007 9016

Bollard light

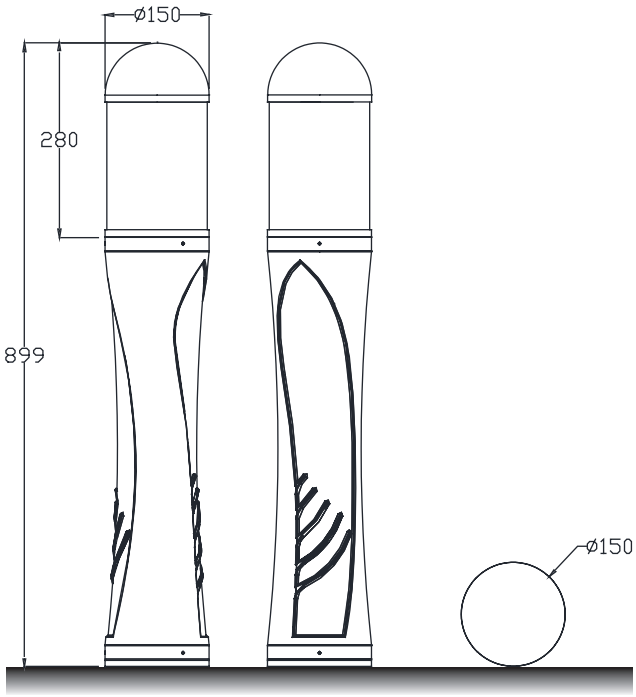

Installation plate

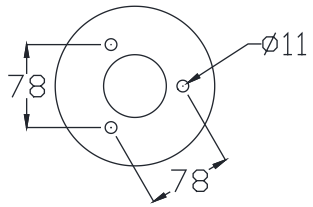

DM-DE21a

Colo(u)r temperature

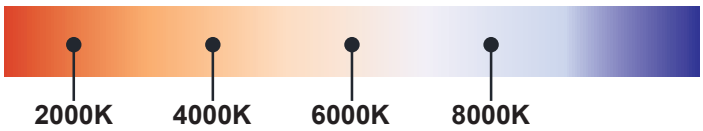

Bollard light

IP65

Rated power	12W	Power Factor	> 0.9
LED Quantity	1pcs	Life	> 50000H
Color Temperature	6000k/4000k/3000k	THD	< 15%
Luminous Flux	1100lm	Frequency Range	50/60HZ
Input Voltage	AC100~277V	Lnstallation Pipe Diameter	/
Protection Grade	IP65	CRI	> 90
Operating Temperature	-30~50℃		

DM-DE21a

Standard colours

9004 9006 9007 9016

Bollard light

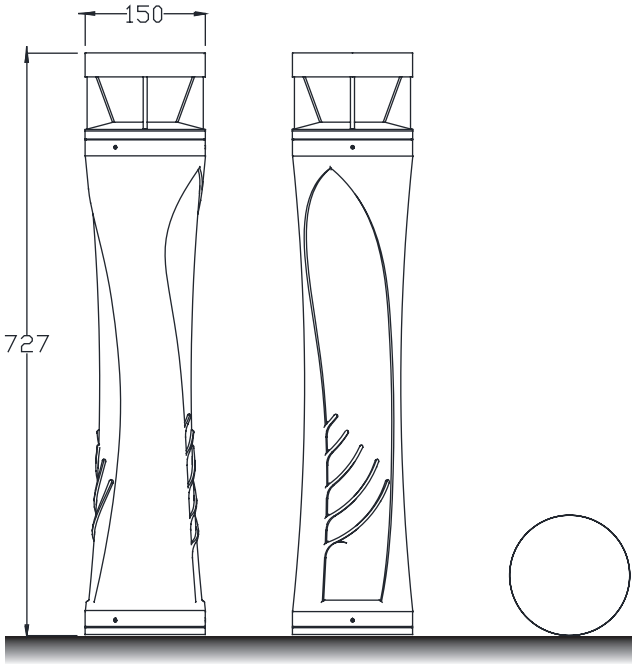

Installation plate

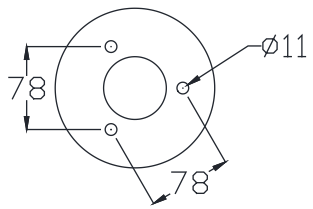

DM-DE22a

Colo(u)r temperature

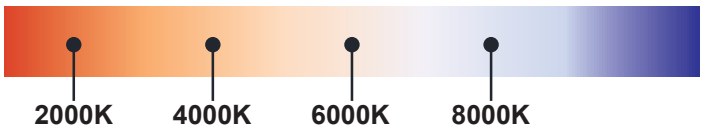

Bollard light

IP65

Rated power	12W	Power Factor	> 0.9
LED Quantity	1pcs	Life	> 50000H
Color Temperature	6000k/4000k/3000k	THD	< 15%
Luminous Flux	1100lm	Frequency Range	50/60HZ
Input Voltage	AC100~277V	Lnstallation Pipe Diameter	/
Protection Grade	IP65	CRI	> 90
Operating Temperature	-30~50℃		

DM-DE22a

Standard colours

9004 9006 9007 9016

Bollard light

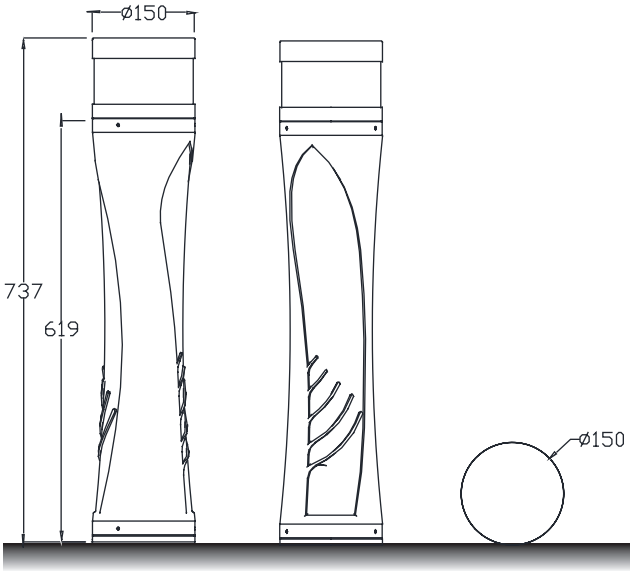

Installation plate

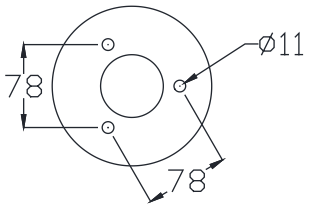

DM-DE23a

Colo(u)r temperature

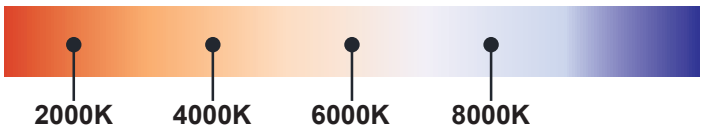

Bollard light

IP65

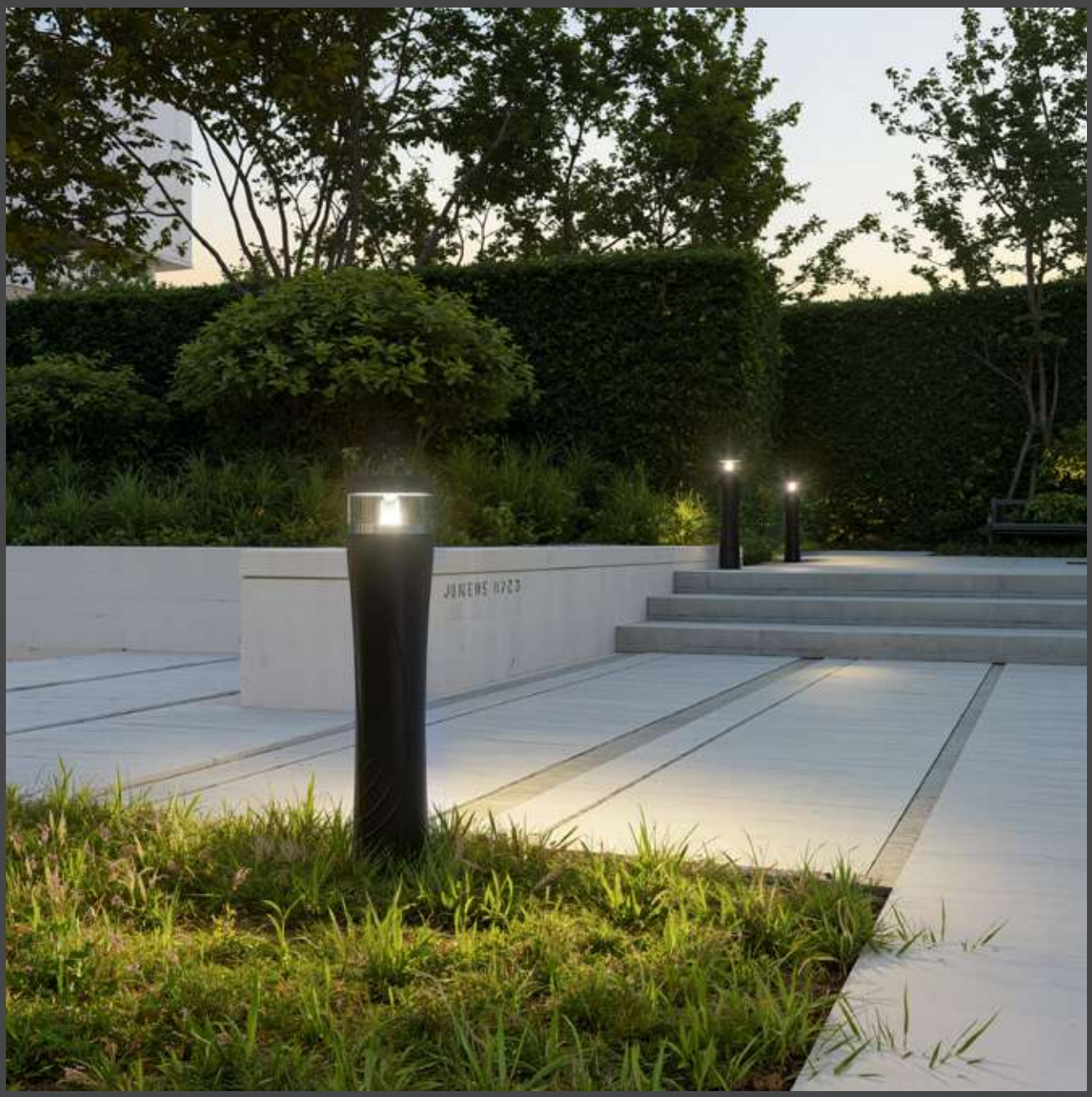

Rated power	12W	Power Factor	> 0.9
LED Quantity	1pcs	Life	> 50000H
Color Temperature	6000k/4000k/3000k	THD	< 15%
Luminous Flux	1100lm	Frequency Range	50/60HZ
Input Voltage	AC100~277V	Lnstallation Pipe Diameter	/
Protection Grade	IP65	CRI	> 90
Operating Temperature	-30~50℃		

DM-DE1a

Standard colours

9004 9006 9007 9016

Bollard light

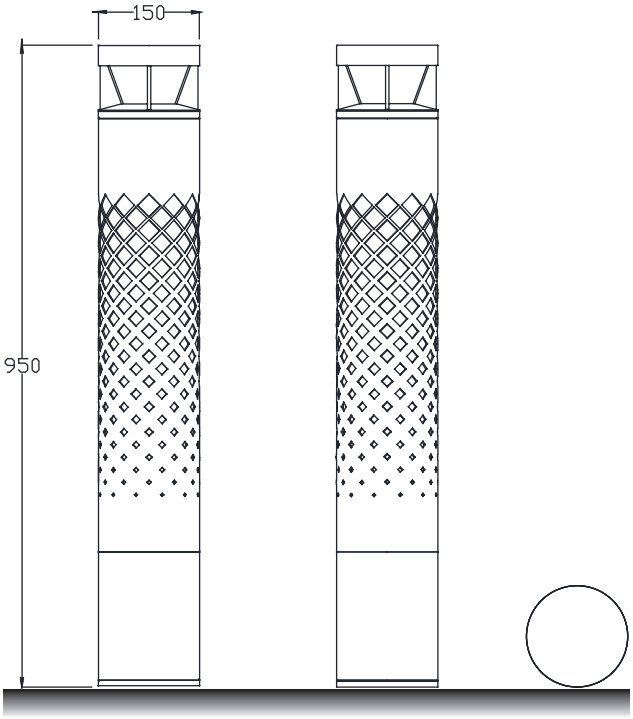

Installation plate

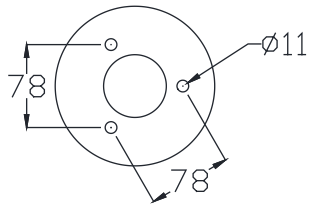

DM-DE24a

Colo(u)r temperature

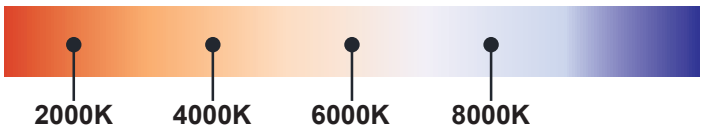

Bollard light

IP65

Rated power	12W	Power Factor	> 0.9
LED Quantity	1pcs	Life	> 50000H
Color Temperature	6000k/4000k/3000k	THD	< 15%
Luminous Flux	1100lm	Frequency Range	50/60HZ
Input Voltage	AC100~277V	Lnstallation Pipe Diameter	/
Protection Grade	IP65	CRI	> 90
Operating Temperature	-30~50℃		

DM-DE24a

Standard colours

9004 9006 9007 9016

Bollard light

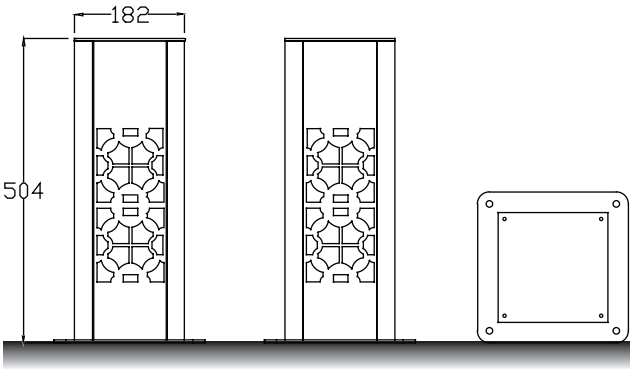

Installation plate

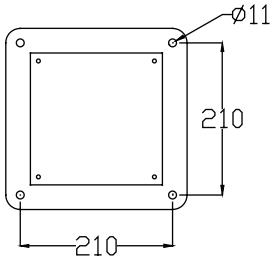

DM-DE25a

Colo(u)r temperature

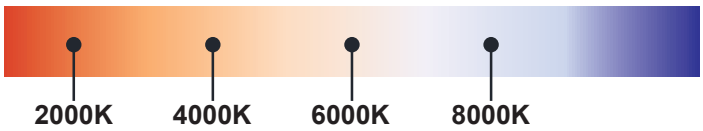

Bollard light

IP65

Rated power	12W	Power Factor	> 0.9
LED Quantity	1pcs	Life	> 50000H
Color Temperature	6000k/4000k/3000k	THD	< 15%
Luminous Flux	1100lm	Frequency Range	50/60HZ
Input Voltage	AC100~277V	Lnstallation Pipe Diameter	/
Protection Grade	IP65	CRI	> 90
Operating Temperature	-30~50℃		

DM-DE25a

Standard colours

9004 9006 9007 9016

Bollard light

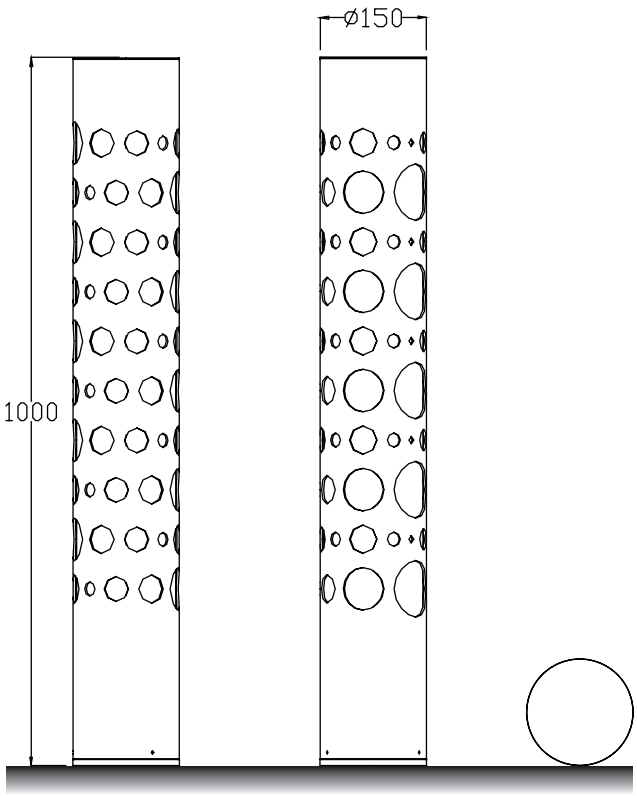

Installation plate

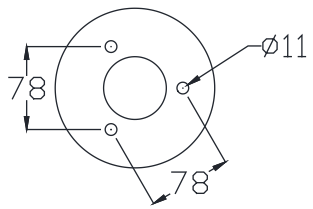

DM-DE26a

Colo(u)r temperature

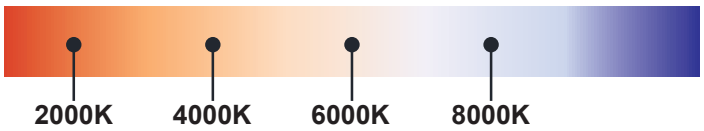

Bollard light

IP65

Rated power	12W	Power Factor	> 0.9
LED Quantity	1pcs	Life	> 50000H
Color Temperature	6000k/4000k/3000k	THD	< 15%
Luminous Flux	1100lm	Frequency Range	50/60HZ
Input Voltage	AC100~277V	Lnstallation Pipe Diameter	/
Protection Grade	IP65	CRI	> 90
Operating Temperature	-30~50℃		

DM-DE26a

Standard colours

9004 9006 9007 9016

Bollard light

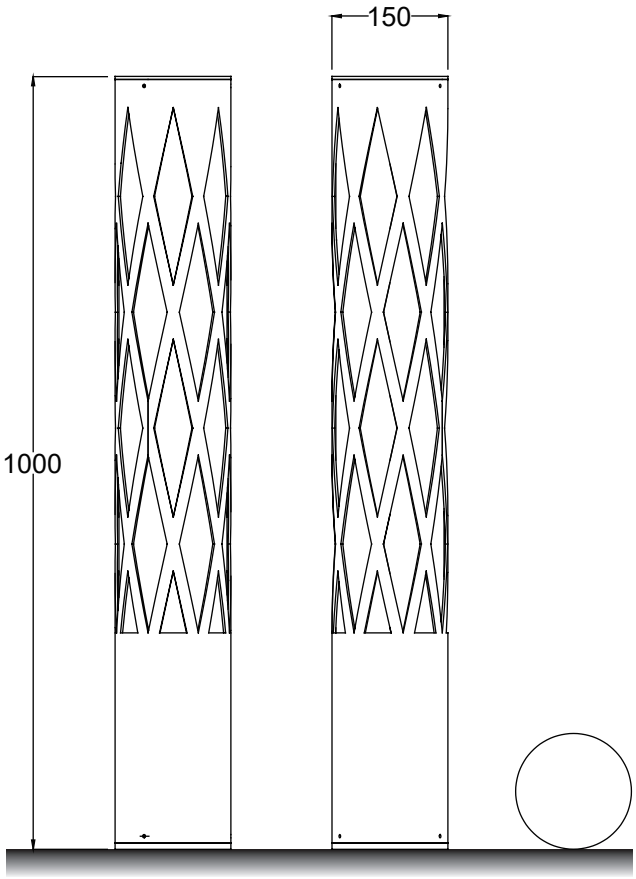

Installation plate

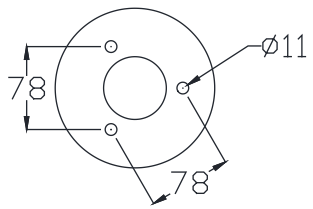

DM-DE27a

Colo(u)r temperature

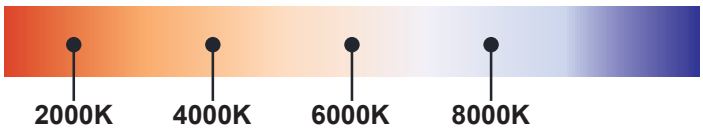

Bollard light

IP65

Rated power	12W	Power Factor	> 0.9
LED Quantity	1pcs	Life	> 50000H
Color Temperature	6000k/4000k/3000k	THD	< 15%
Luminous Flux	1100lm	Frequency Range	50/60HZ
Input Voltage	AC100~277V	Lnstallation Pipe Diameter	/
Protection Grade	IP65	CRI	> 90
Operating Temperature	-30~50℃		

DM-DE27a

Standard colours

9004 9006 9007 9016

Bollard light

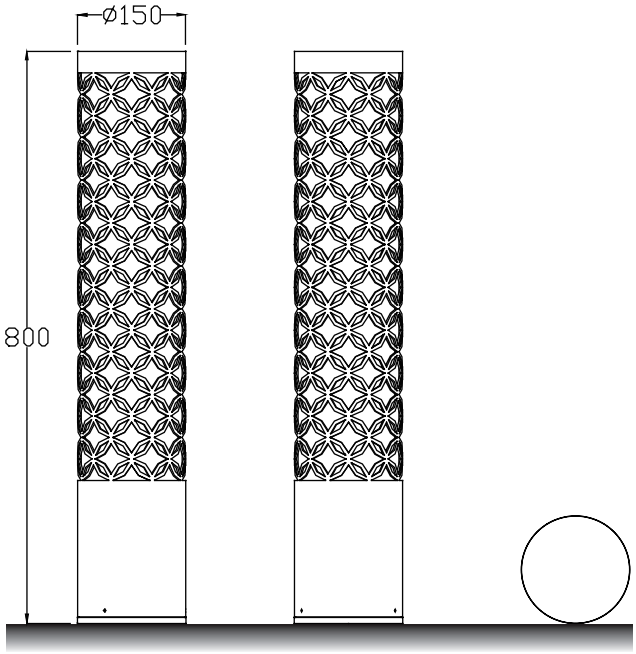

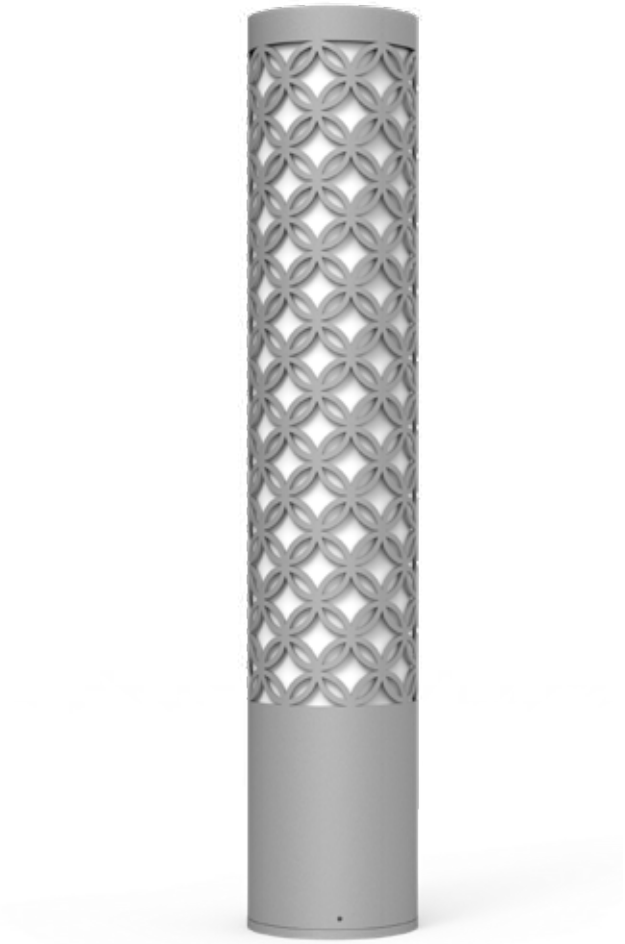

Installation plate

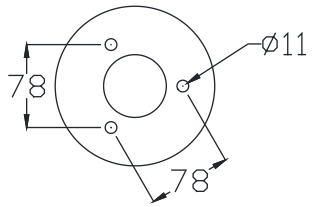

DM-DE28a

Colo(u)r temperature

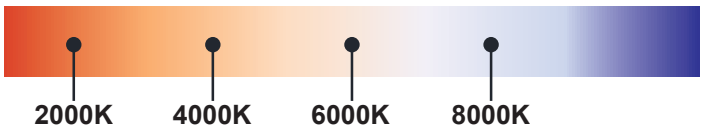

Bollard light

IP65

Rated power	12W	Power Factor	> 0.9
LED Quantity	1pcs	Life	> 50000H
Color Temperature	6000k/4000k/3000k	THD	< 15%
Luminous Flux	1100lm	Frequency Range	50/60HZ
Input Voltage	AC100~277V	Lnstallation Pipe Diameter	/
Protection Grade	IP65	CRI	> 90
Operating Temperature	-30~50℃		

DM-DE28a

Standard colours

9004 9006 9007 9016